CITY OF REEDLEY – DEPARTMENT OF PUBLIC WORKS

CITY PROJECT NO. 2010-6870

PROJECT PLANS FOR

REED AVENUE IMPROVEMENTS
I STREET TO MANNING AVE

FEDERAL PROJECT NO. HSIPL-5216 (036)

FUNDING INCLUDES – MEASURE C (FRESNO COUNTY)
HSIP (HIGHWAY SAFETY IMPROVEMENT PROJECTS)

SHEET NO.	TOTAL SHEETS
1	52

REGISTERED CIVIL ENGINEER

MAY 31, 2016

DATE

REGISTERED PROFESSIONAL ENGINEER
DAVID M. PETERS
No. 52685
EXP: 12/31/16
CIVIL
STATE OF CALIFORNIA

Call USA at:
811

AT LEAST 2 WORKING DAYS
BEFORE STARTING EXCAVATION.

SHEET INDEX

NO.	SHEET	DESCRIPTION
1	T-1	TITLE SHEET
2	X-1	TYPCIAL CROSS SECTIONS & LEGEND
3	HC-1	HORIZONTAL CONTROL
4	DM-1	DEMOLITION PLAN
5	L-1	LAYOUT – REED AVE. STA 35+00 TO STA 40+50
6	L-2	LAYOUT – REED AVE. STA 40+50 TO STA 51+00
7	L-3	LAYOUT – NORTH AVE. STA 7+00 TO STA 13+00
8	G-1	ROUNDABOUT CONTOUR GRADING
9	P-1	PROFILES 'A' LINE, 'C' LINE, & 'E' LINE
10	P-2	PROFILES 'A' LINE, 'B' LINE & 'D' LINE
11	P-3	PROFILES 'A' LINE, 'B' LINE & 'D' LINE
12	P-4	PROFILES 'G' LINE & 'H' LINE
13	P-5	TRUCK APRON CURB PROFILE
14	CD-1	MEDIAN ISLAND DETAILS
15	CD-2	MEDIAN ISLAND DETAILS
16	CD-3	MEDIAN ISLAND DETAILS
17	CD-4	MEDIAN ISLAND DETAILS
18	CD-5	CENTER ISLAND DETAILS
19	CD-6	CONSTRUCTION DETAILS CURB RAMPS
20	CD-7	CONSTRUCTION DETAILS
21	CD-8	CONSTRUCTION DETAILS
22	CD-9	CONSTRUCTION DETAILS
23	CD-10	CONSTRUCTION DETAILS
24	U-1	UTILITY LAYOUT PLAN
25	U-2	UTILITY PLANS REED AVE. – STA 35+00 TO STA 40+50
26	U-3	UTILITY PLANS REED AVE. – STA 40+50 TO STA 46+50
27	U-4	UTILITY PLANS REED AVE. – STA 46+50 TO 52+50
28	U-5	UTILITY PLANS NORTH AVE. – STA 10+00 TO STA 14+00
29	U-6	UTILITY PLANS NORTH AVE. – STA 5+00 TO STA 10+00
30	PD-1	SIGNING & STRIPING – REED AVE. STA 35+00 TO STA 40+50
31	PD-2	SIGNING & STRIPING PLAN – REED AVE. STA 40+50 TO STA 52+00
32	PD-3	SIGNING & STRIPING PLAN – NORTH AVE. STA 7+00 TO STA 13+00
33	SL-1	STREET LIGHTING – REED AVE. STA 35+00 TO 40+50
34	SL-2	STREET LIGHTING – REED AVE. STA 40+50 TO STA 52+00
35	SL-3	STREET LIGHTING – NORTH AVE. STA 7+00 TO STA 13+00
36	E-1	REED & I STREET SIGNALIZATION PLAN
37	E-2	EQUIPMENT SCHEDULE & NOTES
38	E-3	RED FLASHING BEACON PLAN
39	E-4	TRAFFIC SIGNAL MODIFICATIONS INTERSECTION OF REED AND MANNING AVENUES
40	E-5	EQUIPMENT SCHEDULE & NOTES INTERESECTION OF REED AND MANNING AVENUES
41	PL-1	PLANT LEGEND
42	PP-1	PLANTING PLAN – REED AVE. STA 35+00 TO STA 40+50
43	PP-2	PLANTING PLAN – REED AVE. STA 40+50 TO STA 51+00
44	IL-1	IRRIGATION LEGEND AND NOTES
45	IP-1	IRRIGATION PLAN – REED AVE. STA 35+00 TO STA 40+50
46	IP-2	IRRIGATION PLAN– REED AVE. STA 40+50 TO STA 51+00
47	LD-1	LANDSCAPE DETAILS
48	LD-2	LANDSCAPE DETAILS
49	LD-3	LANDSCAPE DETAILS
50	SC-1	CONSTRUCTION – STAGE 1A & 1B
51	SC-2	CONSTRUCTION – STAGE 2A & 2B
52	SC-3	CONSTRUCTION – STAGE 3

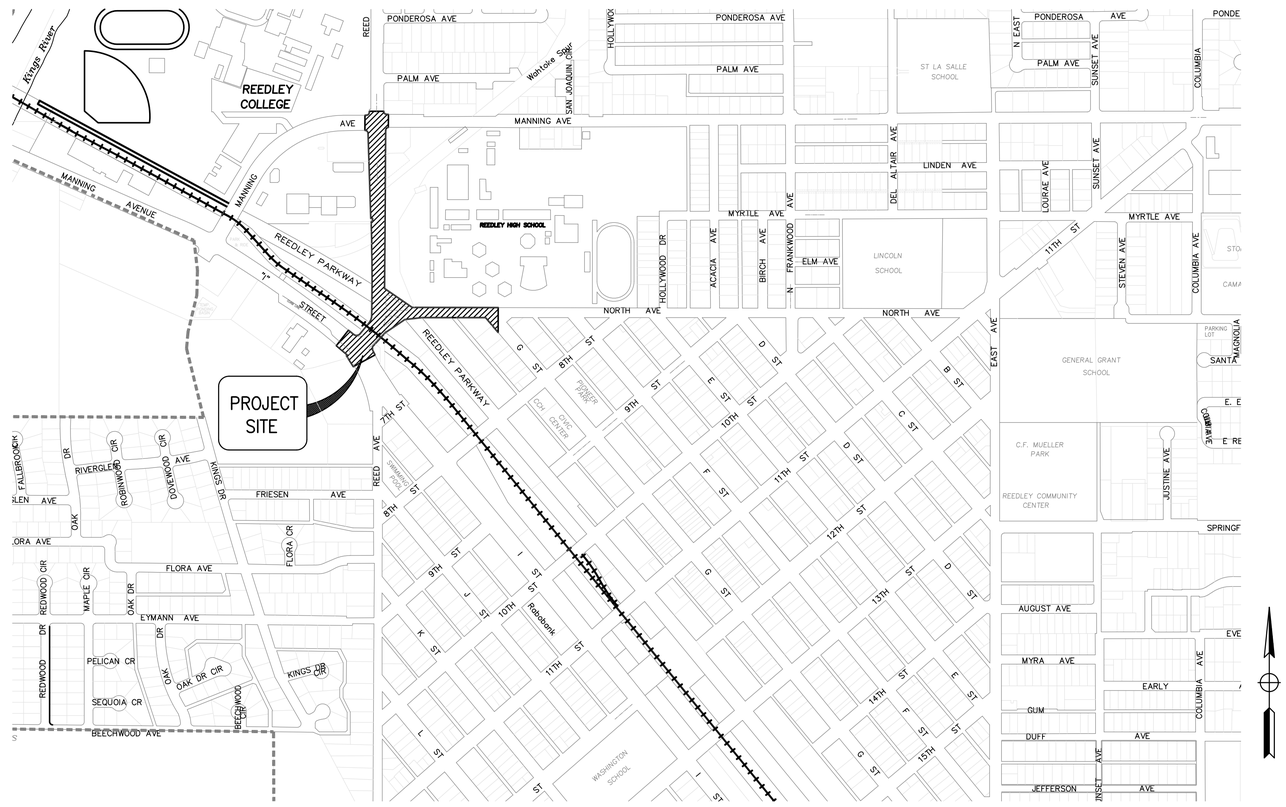

VICINITY MAP
NTS

UTILITY INFORMATION

VERIZON
DON MROZ / GREG MAYBERRY
710 S. KAWEAH AVENUE
EXETER, CA. 93221

PG&E
CHUCK HUGHES
1745 2nd STREET
SELMA, CA 93662

COMCAST CABLE
JEFF GRISSON
1031 NORTH PLAZA DRIVE
VISALIA, CA 93291

S. CAL GAS CO
RICHARD CONNOLLY
404 N. TIPTON STREET
VISALIA, CA 93291

ALTA IRRIGATION DISTRICT
GENERAL MANAGER – CHRIS KAPHEIM
PO. BOX 715
DINUBA, CA 93618

BENCHMARK

CITY OF REEDLEY BENCHMARK 27H02. CHISELED SQUARE ON TOP OF CURB, WESTERLY RETURN OF NORTHERLY CORNER OF "I" STREET AND 8TH. ELEVATION OF 346.46' (NAVD 88)

BASIS OF BEARINGS

THE EAST LINE OF THE NORTHWEST QUARTER OF SECTION 22, TOWNSHIP 15 SOUTH, RANGE 23 EAST, MOUNT DIABLO BASE AND MERIDIAN, ASSUMED TO BE NORTH 0°15'07" EAST

APPROVALS BY:

JOHN ROBERSTON – CITY ENGINEER — DATE 5/31/2016

T-1

PETERS ENGINEERING GROUP
952 POLLASKY AVENUE
CLOVIS, CALIFORNIA 93612
PHONE (559) 299-1544
WWW.PETERS-ENGINEERING.COM

CITY OF REEDLEY
PUBLIC WORKS DEPARTMENT
1733 9TH STREET
REEDLEY, CALIFORNIA 93654

	BY
DESIGN	PNG
DRAWN	PNG
CHECKED	DMP

REED AVENUE IMPROVEMENTS
TITLE SHEET

ORIGINAL SCALE IN INCHES FOR REDUCED PLANS 0 1 2 3

DISREGARD PRINTS BEARING EARLIER REVISION DATES

REVISION DATES (PRELIMINARY STAGE ONLY)

DWG: S:\2014\14-013\Acad\Roundabout\Planset\14-013 T-1.dwg USER: Phil Gerther DATE: Jun 02, 2016 4:10pm

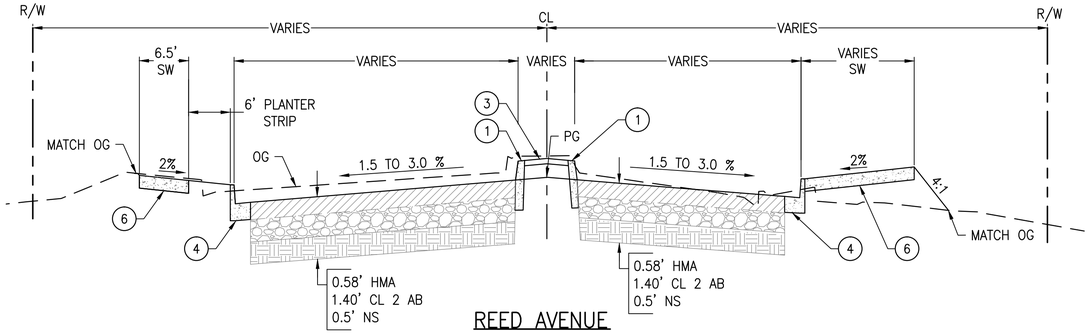

REED AVENUE

C LINE – STA 10+78 TO STA 11+78

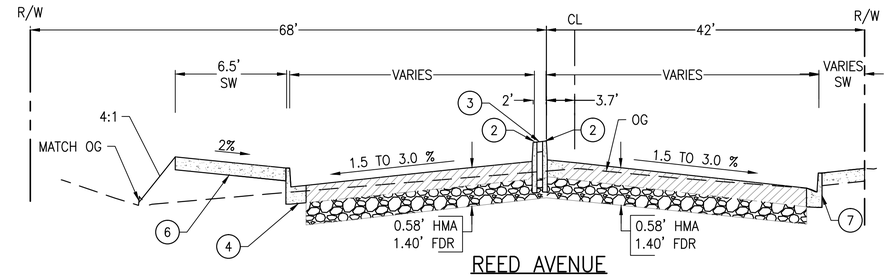

REED AVENUE

A LINE – STA 48+30 TO STA 49+45

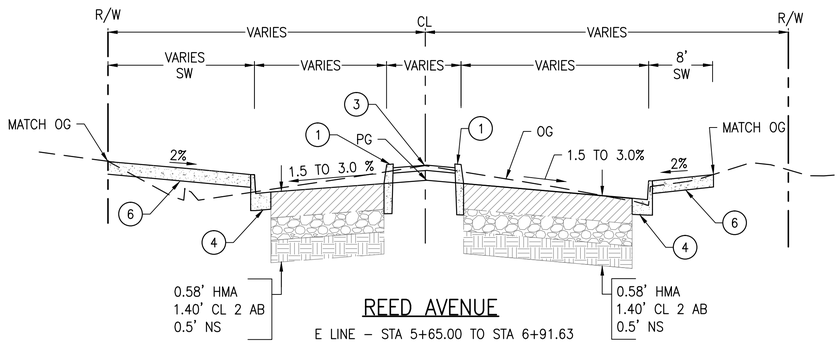

REED AVENUE

E LINE – STA 5+65.00 TO STA 6+91.63

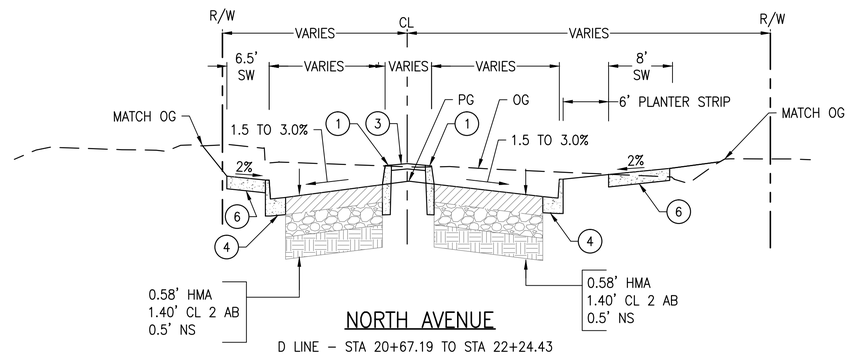

NORTH AVENUE

D LINE – STA 20+67.19 TO STA 22+24.43

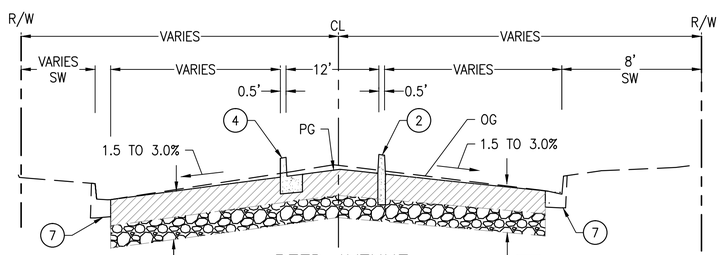

REED AVENUE

A LINE – STA 41+13.13 TO STA 41+34.50
A LINE – STA 43+35.28 TO STA 43+59.74

*CONST. CURB & GUTTER FROM STA 43+35.28 TO 43+59.74

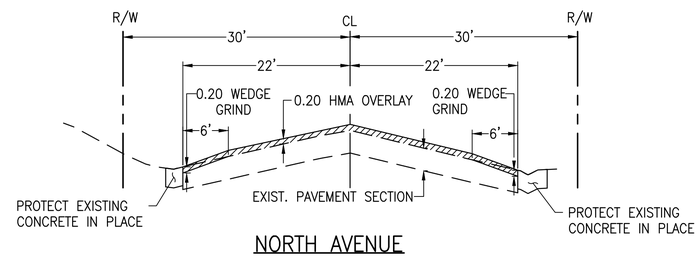

NORTH AVENUE

B LINE – STA 7+88.60 TO STA 12+41.77

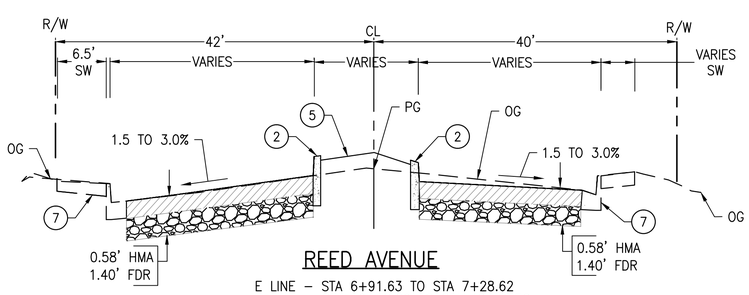

REED AVENUE

E LINE – STA 6+91.63 TO STA 7+28.62
A LINE – STA 39+50.00 TO STA 40+42.56
A LINE – STA 41+65.64 TO STA 44+25.33
A LINE – STA 45+24.79 TO STA 46+40.17

LEGEND (CROSS SECTION SHEET ONLY)

- HOT MIXED ASPHALT (CLASS A, PG–70)
- FULL DEPTH RECLAMATION PER RECOMMENDATION BY THE GEOTECHNICAL ENGINEER
- AGGREGATE BASE
- COMPACTED BACKFILL/SUBGRADE COMPACTED TO 95% RELATIVE COMPACTION
- CONCRETE

LEGEND – EXISTING

W12	EXIST WATER MAIN, SIZE & TYPE	X	EXIST CHAIN LINK FENCE
SS12	EXIST SANITARY SEWER PIPE, SIZE & TYPE	SD	EXIST STORM DRAIN PIPELINE
	EXIST POWER POLE		EXIST FIRE HYDRANT
T	EXIST TELEPHONE LINE	WV	EXIST VALVE BOX
EC	EXIST ELECTRICAL LINE	EP 600.30	EXIST TOPO POINT
G	EXIST BURIED GAS PIPE	WM	EXIST WATER METER
TV	EXIST BURIED CABLE TV	GM	EXIST GAS METER
E	EXIST OVERHEAD ELECT	CO	EXIST CLEAN OUT
TEL	EXIST TEL. CABLE PEDESTAL		EXIST EDGE OF PAVEMENT
	EXIST TELEPHONE POLE W/ GUY WIRE		
	EXIST STREET LIGHT		
SSMH SDMH	EXIST STORM DRAIN/ SEWER MANHOLE		

REGISTERED CIVIL ENGINEER

MAY 31, 2016

DATE

REGISTERED PROFESSIONAL ENGINEER DAVID M. PETERS No. 52685 EXP: 12/31/16 CIVIL STATE OF CALIFORNIA

SHEET NO.	TOTAL SHEETS
2	52

LEGEND – PROPOSED

- STATION LINE/CENTERLINE
- ROW
- FG 605.00 PROPOSED SPOT GRADE
- HOT MIX ASPHALT
- STAMPED CONCRETE
- PROPOSED CONCETE
- PROPOSED LANDSCAPE
- HMA OVERLAY
- (1) CONST. 6" MOUNTABLE MEDIAN CURB PER DETAIL 7, SHEET CD–8.
- (2) CONST. 6" MEDIAN CURB PER DETAIL 8, SHEET CD–8.
- (3) 3.5" THICK CONCRETE TEXTURED PAVING, STAMP PATTERN AND COLOR TO BE APPROVED BY THE ENGINEER
- (4) CONST. CURB AND GUTTER PER CTIY STD ST–4A
- (5) LANDSCAPE AREA – SEE LANDSCAPING PLANS
- (6) CONST. CONC. SIDEWALK PER CTY STD PLAN ST–4A
- (7) EXISTING CURB, GUTTER & SIDEWALK TO REMAIN & PROTECT IN PLACE

NOTES:
1. FOR STATION INFORMATION SEE THE HORIZONTAL CONTROL PLAN ON SHEET HC–1.
2. FOR STATION OFFSET, LINE TABLES AND ELEVATIONS, SEE CONSTRUCTION DETAILS, CD–1 THROUGH CD–5.

ABBREVIATIONS

AC	ASPHALTIC CONCRETE	N	NORTH
BW	BACK OF WALK	NS	NATIVE SOIL
C	CONCRETE	NTS	NOT TO SCALE
℄ OR CL	CENTER LINE	OG	ORIGINAL GRADE
CONC	CONCRETE	P	PAVEMENT
EL	ELEVATION	PL	PROPERTY LINE
EP	EDGE OF PAVEMENT	PG	PROFILE GRADE
EXIST	EXISTING	PP	POWER POLE
FC	FACE OF CURB	PROP	PROPOSED
FDR	FULL DEPTH RECLAMATION	R/W	RIGHT OF WAY
FF	FINISHED FLOOR	RT	RIGHT
FG	FINISHED GRADE	RW	RETAINING WALL
FH	FIRE HYDRANT	STA	STATION
FL	FLOWLINE	SHLD	SHOULDER
FT	FEET, FOOT	SW	SIDEWALK
GR	GRADE	TC	TOP OF CURB, CONCRETE
IE/INV	INVERT ELEVATION	TF	TOP OF FOOTING
LOG	LIP OF GUTTER	TG	TOP OF GRATE
LT	LEFT	TP	TOP OF PAVEMENT
MAX	MAXIMUM	TYP	TYPICAL
ME	MATCH EXISTING	W	WEST, WIDTH
MH	MANHOLE	W/	WITH
MIN	MINIMUM	WM	WATER METER
		WV	WATER VALVE
		VG	VALLEY GUTTER

X–1

NOT TO SCALE

PETERS ENGINEERING GROUP
952 POLLASKY AVENUE
CLOVIS, CALIFORNIA 93612
PHONE (559) 299-1544
WWW.PETERS-ENGINEERING.COM

CITY OF REEDLEY
PUBLIC WORKS DEPARTMENT
1733 9TH STREET
REEDLEY, CALIFORNIA 93654

	BY
DESIGN	PNG
DRAWN	PNG
CHECKED	DMP

REED AVENUE IMPROVEMENTS

TYPICAL CROSS SECTIONS & LEGEND

ORIGINAL SCALE IN INCHES FOR REDUCED PLANS 0 1 2 3

DISREGARD PRINTS BEARING EARLIER REVISION DATES

REVISION DATES (PRELIMINARY STAGE ONLY)

DWG: S:\2014\14-013\Acad\Roundabout\Planset\14-013 X-1.dwg USER: Phil Ginther DATE: Jun 03, 2016 11:00am

REGISTERED CIVIL ENGINEER

MAY 31, 2016

DATE

REGISTERED PROFESSIONAL ENGINEER DAVID M. PETERS No. 52685 EXP: 12/31/16 CIVIL STATE OF CALIFORNIA

'A' ALIGNMENT			
Number	Length	Radius	Line/Chord Direction
L1	2638.528		N0° 18' 10.91"E

'B' ALIGNMENT			
Number	Length	Radius	Line/Chord Direction
L2	2640.000		S89° 30' 13.06"E

'C' ALIGNMENT – CROWN			
Number	Length	Radius	Line/Chord Direction
L3	64.535		N40° 44' 37.93"E
C1	17.740	1419.642	N41° 06' 06.68"E
C2	58.523	137.752	N29° 17' 20.53"E
C3	104.724	285.176	N27° 38' 18.63"E

'D' ALIGNMENT – CROWN			
Number	Length	Radius	Line/Chord Direction
L4	67.695		S61° 01' 52.81"E
C4	21.571	129.994	S65° 47' 06.11"E
C5	11.430	83.351	S74° 28' 01.89"E
C6	156.558	434.413	S88° 07' 26.99"E
C7	15.612	100.000	N86° 01' 26.03"E
L5	27.134		S89° 30' 05.12"E

'E' ALIGNMENT – CROWN			
Number	Length	Radius	Line/Chord Direction
L6	79.921		N9° 16' 57.10"W
C8	6.566	47.420	N13° 08' 54.11"W
L7	14.378		N16° 25' 05.27"W
C9	5.537	63.866	N20° 05' 32.78"W
L8	15.316		N22° 55' 09.83"W
C10	69.907	299.071	N13° 37' 07.70"W
C11	36.997	610.526	N3° 12' 58.14"W

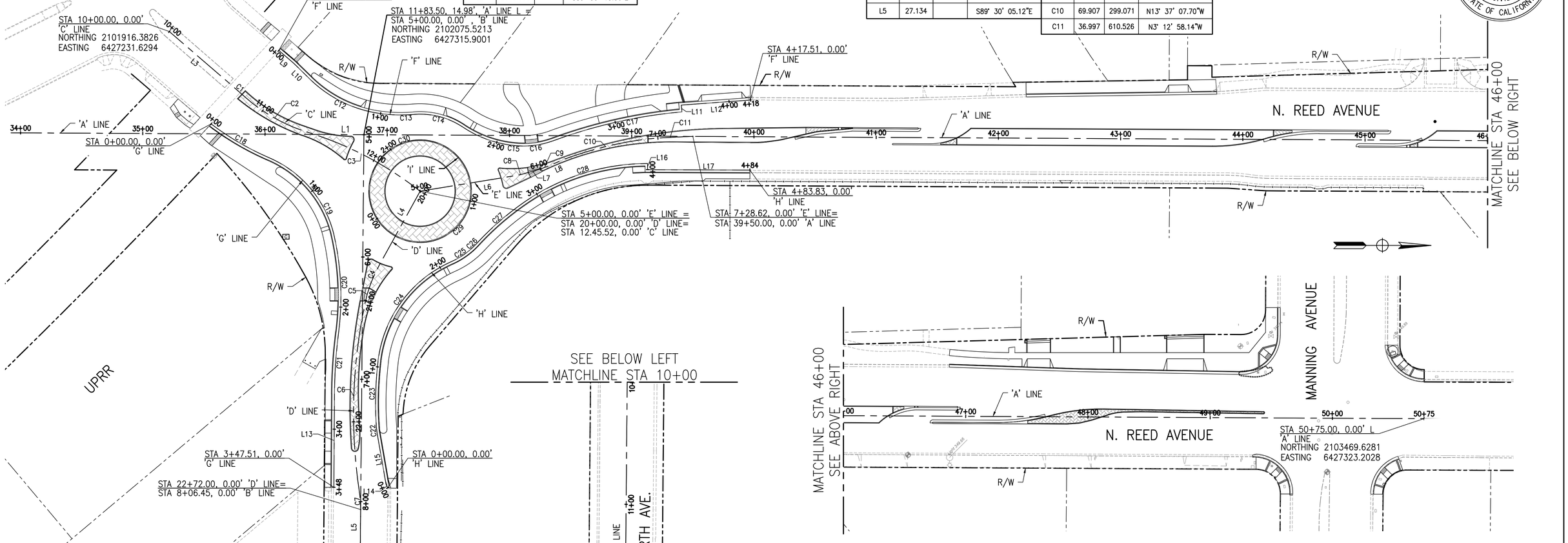

'F' ALIGNMENT – LIP OF GUTTER			
Number	Length	Radius	Line/Chord Direction
L9	15.534		N40° 27' 14.72"E
L10	19.094		N44° 21' 03.23"E
C12	63.533	102.000	N26° 30' 24.46"E
C13	28.848	122.001	N1° 53' 19.65"E
C14	42.544	63.000	N14° 23' 24.91"E
C15	47.265	92.000	N19° 01' 05.19"E
C16	30.304	71.000	N7° 55' 38.17"W
C17	108.137	409.500	N12° 38' 06.84"W
L11	5.569		S84° 32' 04.03"W
L12	56.889		N4° 09' 54.46"W

'G' ALIGNMENT – LIP OF GUTTER			
Number	Length	Radius	Line/Chord Direction
C18	55.088	228.000	N30° 14' 10.83"E
C19	84.143	92.000	N49° 30' 57.22"E
C20	81.404	227.000	N87° 04' 47.12"E
C21	50.517	416.000	S86° 07' 32.63"E
L13	76.355		S89° 36' 16.61"E

'H' ALIGNMENT – LIP OF GUTTER			
Number	Length	Radius	Line/Chord Direction
L14	3.367		S65° 51' 03.48"W
L15	41.939		S80° 06' 11.69"W
C22	5.430	52.000	S83° 05' 40.33"W
C23	54.253	288.000	N88° 31' 03.18"W
C24	105.415	102.000	N53° 30' 50.15"W
C25	19.926	63.000	N32° 58' 04.57"W
C26	5.856	63.000	N44° 41' 31.31"W
C27	53.043	232.000	N40° 48' 19.07"W
C28	105.823	177.000	N17° 07' 39.85"W
L16	4.999		S89° 45' 55.28"E
L17	83.781		N0° 14' 04.72"E

'I' ALIGNMENT – ISLAND			
Number	Length	Radius	Line/Chord Direction
C29	149.811	42.000	N44° 35' 24.90"W
C30	114.083	42.000	S44° 35' 24.90"E

HC–1

SCALE: 1" = 40'

0 20 40 60 80

PETERS ENGINEERING GROUP
952 POLLASKY AVENUE
CLOVIS, CALIFORNIA 93612
PHONE (559) 299-1544
WWW.PETERS-ENGINEERING.COM

CITY OF REEDLEY
PUBLIC WORKS DEPARTMENT
1733 9TH STREET
REEDLEY, CALIFORNIA 93654

	BY
DESIGN	PNG
DRAWN	PNG
CHECKED	DMP

REED AVENUE IMPROVEMENTS
HORIZONTAL CONTROL

ORIGINAL SCALE IN INCHES FOR REDUCED PLANS 0 1 2 3

DISREGARD PRINTS BEARING EARLIER REVISION DATES

REVISION DATES (PRELIMINARY STAGE ONLY)

DWG: S:\2014\14-013\Acad\Roundabout\Planset\14-013 HC-1.dwg USER: Phil Ginther DATE: Jun 03, 2016 11:01am

SHEET NO.	TOTAL SHEETS
4	52

REGISTERED CIVIL ENGINEER

MAY 31, 2016

DATE

REGISTERED PROFESSIONAL ENGINEER
DAVID M. PETERS
No. 52685
EXP: 12/31/16
CIVIL
STATE OF CALIFORNIA

LEGEND

- LIMITS OF AC GRIND AND HMA OVERLAY
- LIMITS OF PAVEMENT RECYCLING AND RECONSTRUCTION
- LIMITS OF CONCRETE CURB, GUTTER & SIDEWALK REMOVAL

1. REMOVE AND SALVAGE EXISTING SIGN TO THE CITY PUBLIC WORKS DEPARTMENT.
2. REMOVE AND SALVAGE EXISTING LIGHTING FACILITY TO THE CITY'S PUBLIC WORKS DEPARTMENT.
3. REMOVE AND SALVAGE EXISTING FLASHING BEACON TO THE CITY'S PUBLIC WORKS DEPARTMENT.
4. REMOVE EXISTING UTILITY POLE

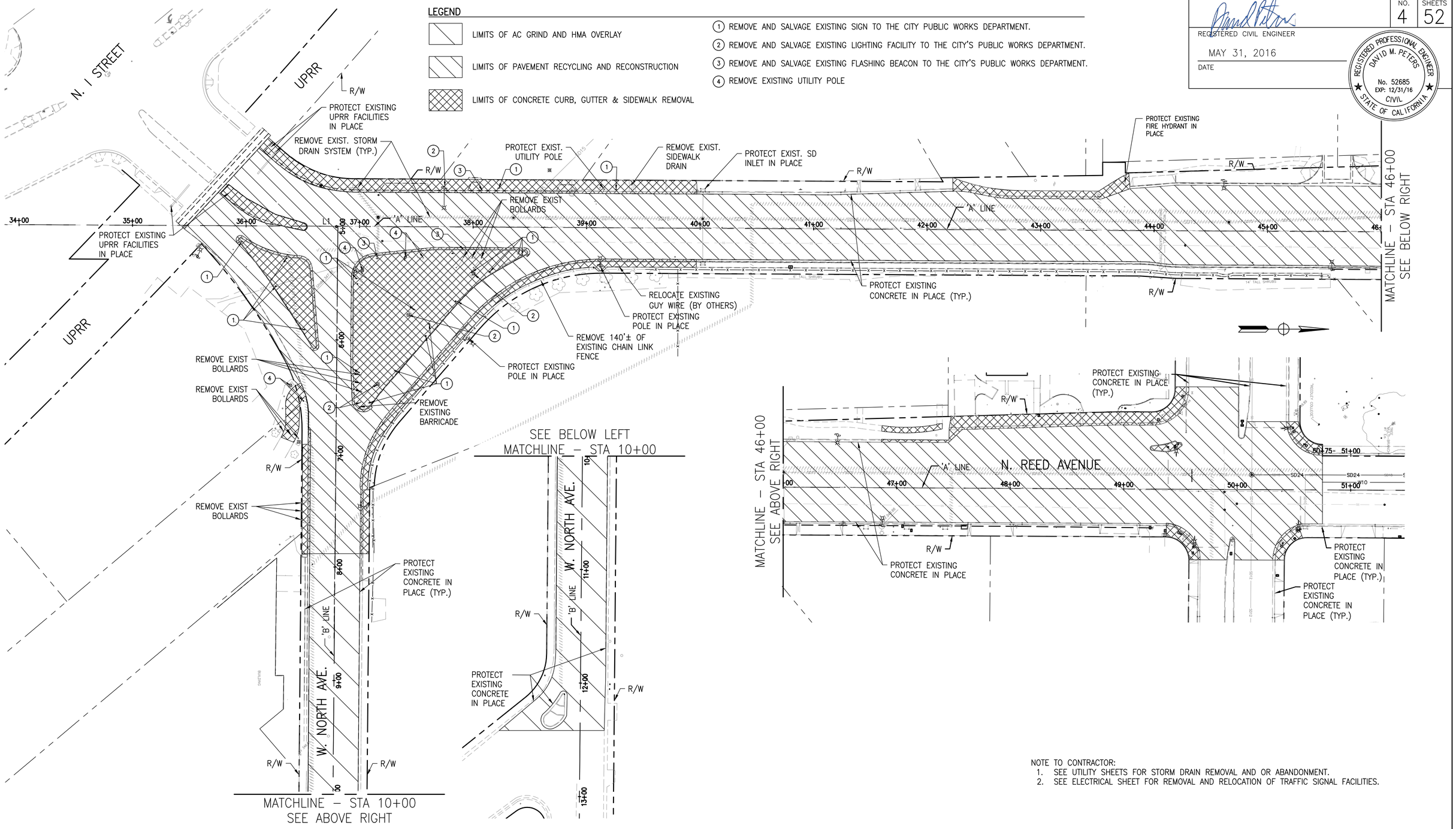

NOTE TO CONTRACTOR:
1. SEE UTILITY SHEETS FOR STORM DRAIN REMOVAL AND OR ABANDONMENT.
2. SEE ELECTRICAL SHEET FOR REMOVAL AND RELOCATION OF TRAFFIC SIGNAL FACILITIES.

DM–1

SCALE: 1" = 40'

0 20 40 60 80

PETERS ENGINEERING GROUP
952 POLLASKY AVENUE
CLOVIS, CALIFORNIA 93612
PHONE (559) 299-1544
WWW.PETERS-ENGINEERING.COM

CITY OF REEDLEY
PUBLIC WORKS DEPARTMENT
1733 9TH STREET
REEDLEY, CALIFORNIA 93654

	BY
DESIGN	PNG
DRAWN	PNG
CHECKED	DMP

REED AVENUE IMPROVEMENTS

DEMOLITION PLAN

ORIGINAL SCALE IN INCHES FOR REDUCED PLANS 0 1 2 3

DISREGARD PRINTS BEARING EARLIER REVISION DATES

REVISION DATES (PRELIMINARY STAGE ONLY)

DWG: S:\2014\14-013\Acad\Roundabout\Planset\14-013 DM-1.dwg USER: Phil Ginther DATE: Jun 03, 2016 11:02am

REGISTERED CIVIL ENGINEER

MAY 31, 2016

DATE

REGISTERED PROFESSIONAL ENGINEER DAVID M. PETERS No. 52685 EXP: 12/31/16 CIVIL STATE OF CALIFORNIA

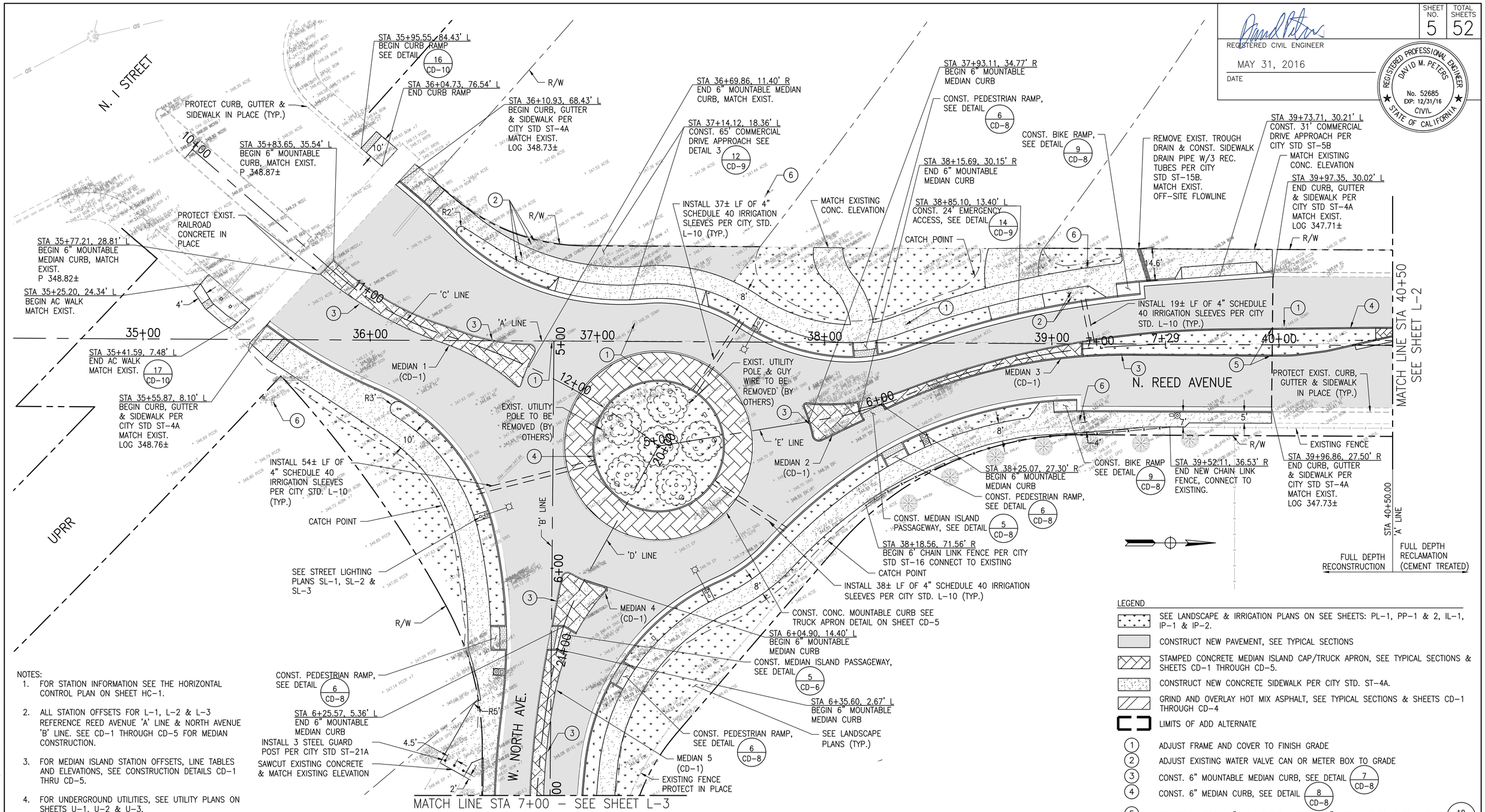

NOTES:

1. FOR STATION INFORMATION SEE THE HORIZONTAL CONTROL PLAN ON SHEET HC-1.
2. ALL STATION OFFSETS FOR L-1, L-2 & L-3 REFERENCE REED AVENUE 'A' LINE & NORTH AVENUE 'B' LINE. SEE CD-1 THROUGH CD-5 FOR MEDIAN CONSTRUCTION.
3. FOR MEDIAN ISLAND STATION OFFSETS, LINE TABLES AND ELEVATIONS, SEE CONSTRUCTION DETAILS CD-1 THRU CD-5.
4. FOR UNDERGROUND UTILITIES, SEE UTILITY PLANS ON SHEETS U-1, U-2 & U-3.
5. THE CONTRACTOR SHALL INSTALL END POSTS AS REQUIRED FOR THE NEW CHAIN LINK FENCE CONNECTIONS TO THE EXISTING FENCE.

LEGEND

- SEE LANDSCAPE & IRRIGATION PLANS ON SEE SHEETS: PL-1, PP-1 & 2, IL-1, IP-1 & IP-2.
- CONSTRUCT NEW PAVEMENT, SEE TYPICAL SECTIONS
- STAMPED CONCRETE MEDIAN ISLAND CAP/TRUCK APRON, SEE TYPICAL SECTIONS & SHEETS CD-1 THROUGH CD-5.
- CONSTRUCT NEW CONCRETE SIDEWALK PER CITY STD. ST-4A.
- GRIND AND OVERLAY HOT MIX ASPHALT, SEE TYPICAL SECTIONS & SHEETS CD-1 THROUGH CD-4
- LIMITS OF ADD ALTERNATE
- (1) ADJUST FRAME AND COVER TO FINISH GRADE
- (2) ADJUST EXISTING WATER VALVE CAN OR METER BOX TO GRADE
- (3) CONST. 6" MOUNTABLE MEDIAN CURB, SEE DETAIL 7 CD-8
- (4) CONST. 6" MEDIAN CURB, SEE DETAIL 8 CD-8
- (5) TRANSITION FROM 6" MOUNTABLE CURB TO 6" MEDIAN CURB OVER 2 FEET 18 CD-10
- (6) PROTECT EXISTING UTILITY POLE IN PLACE
- (7) ADJUST PULL BOX TO GRADE

L-1

SCALE: 1" = 20'

0 10 20 30 40

PETERS ENGINEERING GROUP
952 POLLASKY AVENUE
CLOVIS, CALIFORNIA 93612
PHONE (559) 299-1544
WWW.PETERS-ENGINEERING.COM

CITY OF REEDLEY
PUBLIC WORKS DEPARTMENT
1733 9TH STREET
REEDLEY, CALIFORNIA 93654

	BY
DESIGN	PNG
DRAWN	PNG
CHECKED	DMP

ORIGINAL SCALE IN INCHES FOR REDUCED PLANS 0 1 2 3

REED AVENUE IMPROVEMENTS

LAYOUT – REED AVE. STA 35+00 TO STA 40+50

DISREGARD PRINTS BEARING EARLIER REVISION DATES

REVISION DATES (PRELIMINARY STAGE ONLY)

DWG: S:\2014\14-013\Acad\Roundabout\Planset\14-013 L-1.dwg USER: Phil Ginther DATE: Jun 03, 2016 11:03am

LEGEND

- SEE LANDSCAPE & IRRIGATION PLANS ON SEE SHEETS: PL-1, PP-1 & 2, IL-1, IP-1 & IP-2.
- CONSTRUCT NEW PAVEMENT, SEE TYPICAL SECTIONS
- STAMPED CONCRETE MEDIAN ISLAND CAP/TRUCK APRON, SEE TYPICAL SECTIONS & SHEETS CD-1 THROUGH CD-5.
- CONSTRUCT NEW CONCRETE SIDEWALK PER CITY STD. ST-4A.
- GRIND AND OVERLAY HOT MIX ASPHALT, SEE TYPICAL SECTIONS & SHEETS CD-1 THROUGH CD-4
- LIMITS OF ADD ALTERNATE

1. ADJUST FRAME AND COVER TO FINISH GRADE
2. ADJUST EXISTING WATER VALVE CAN OR METER BOX TO GRADE
3. CONST. 6" MOUNTABLE MEDIAN CURB, SEE DETAIL 7/CD-8
4. CONST. 6" MEDIAN CURB, SEE DETAIL 8/CD-8
5. TRANSITION FROM 6" MOUNTABLE CURB TO 6" MEDIAN CURB OVER 2 FEET 18/CD-10
6. PROTECT EXISTING UTILITY POLE IN PLACE
7. ADJUST PULL BOX TO GRADE

NOTES:

1. FOR STATION INFORMATION SEE THE HORIZONTAL CONTROL PLAN ON SHEET HC-1.
2. FOR MEDIAN ISLAND STATION OFFSETS, LINE TABLES AND ELEVATIONS, SEE CONSTRUCTION DETAILS CD-1 THRU CD-5.

REGISTERED CIVIL ENGINEER

MAY 31, 2016

DATE

REGISTERED PROFESSIONAL ENGINEER DAVID M. PETERS No. 52685 EXP: 12/31/16 CIVIL STATE OF CALIFORNIA

SHEET NO.	TOTAL SHEETS
6	52

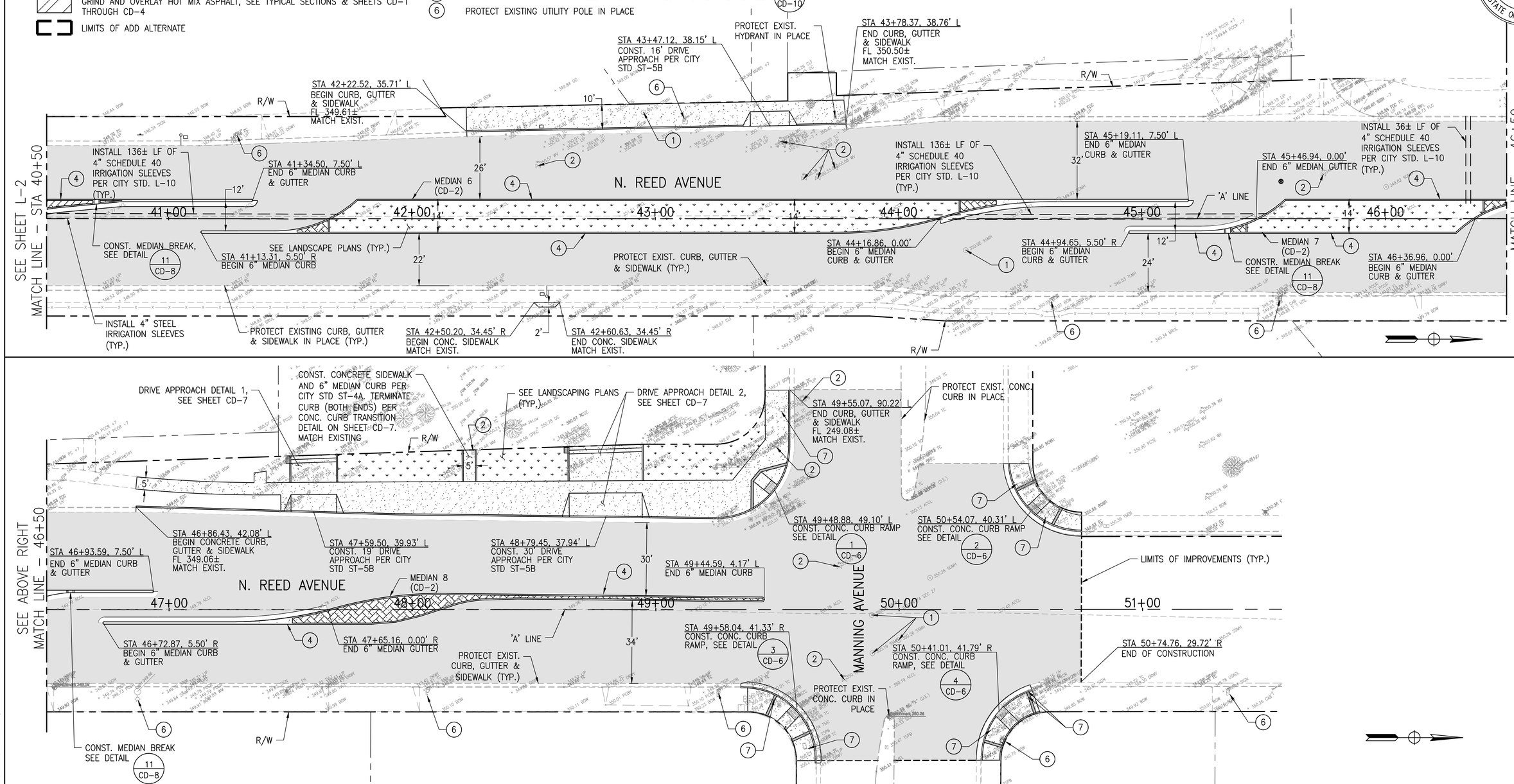

L-2

SCALE: 1" = 20'

0 10 20 30 40

PETERS ENGINEERING GROUP
952 POLLASKY AVENUE
CLOVIS, CALIFORNIA 93612
PHONE (559) 299-1544
WWW.PETERS-ENGINEERING.COM

CITY OF REEDLEY
PUBLIC WORKS DEPARTMENT
1733 9TH STREET
REEDLEY, CALIFORNIA 93654

	BY
DESIGN	PNG
DRAWN	PNG
CHECKED	DMP

REED AVENUE IMPROVEMENTS

LAYOUT – REED AVE. STA 40+50 TO STA 51+00

ORIGINAL SCALE IN INCHES FOR REDUCED PLANS 0 1 2 3

DISREGARD PRINTS BEARING EARLIER REVISION DATES

REVISION DATES (PRELIMINARY STAGE ONLY)

DWG: S:\2014\14-013\Acad\Roundabout\Plansset\14-013 L-1.dwg USER: Phil Gether DATE: Jun 03, 2016 11:04am

SHEET NO.	TOTAL SHEETS
7	52

REGISTERED CIVIL ENGINEER

MAY 31, 2016

DATE

REGISTERED PROFESSIONAL ENGINEER
DAVID M. PETERS
No. 52685
EXP: 12/31/16
CIVIL
STATE OF CALIFORNIA

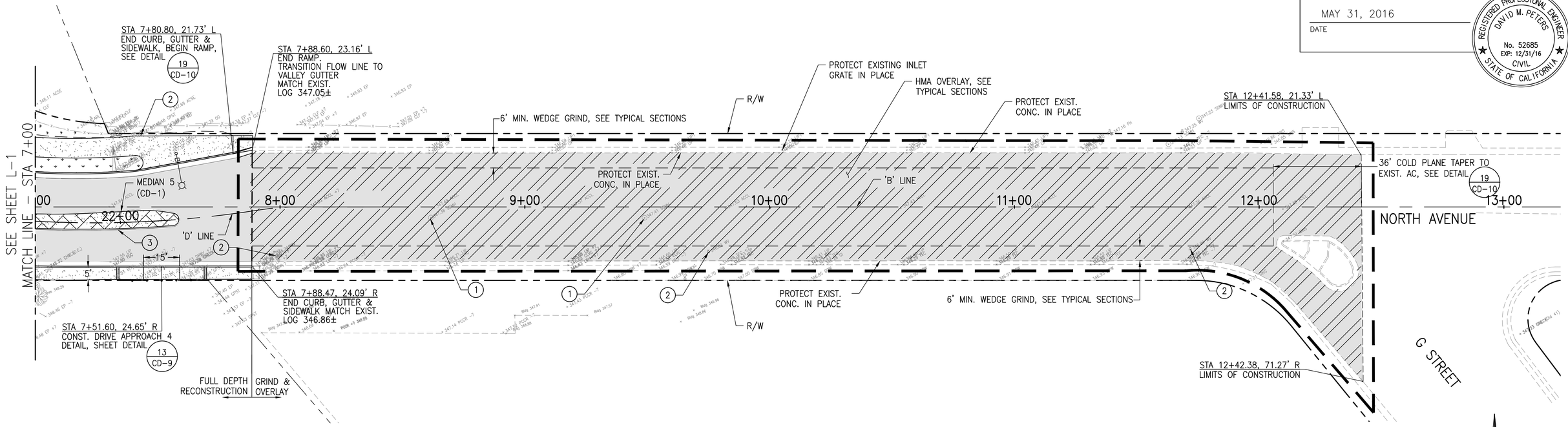

LEGEND

- SEE LANDSCAPE & IRRIGATION PLANS ON SEE SHEETS: PL-1, PP-1 & 2, IL-1, IP-1 & IP-2.
- CONSTRUCT NEW PAVEMENT, SEE TYPICAL SECTIONS
- STAMPED CONCRETE MEDIAN ISLAND CAP/TRUCK APRON, SEE TYPICAL SECTIONS & SHEETS CD-1 THROUGH CD-5.
- CONSTRUCT NEW CONCRETE SIDEWALK PER CITY STD. ST-4A.
- GRIND AND OVERLAY HOT MIX ASPHALT, SEE TYPICAL SECTIONS & SHEETS CD-1 THROUGH CD-4
- LIMITS OF ADD ALTERNATE
- (1) ADJUST FRAME AND COVER TO FINISH GRADE
- (2) ADJUST EXISTING WATER VALVE CAN OR METER BOX TO GRADE
- (3) CONST. 6" MOUNTABLE MEDIAN CURB, SEE DETAIL 7 CD-8
- (4) CONST. 6" MEDIAN CURB, SEE DETAIL 8 CD-8
- (5) TRANSITION FROM 6" MOUNTABLE CURB TO 6" MEDIAN CURB OVER 2 FEET 18 CD-10
- (6) PROTECT EXISTING UTILITY POLE IN PLACE
- (7) ADJUST PULL BOX TO GRADE

NOTES:

1. FOR STATION INFORMATION SEE THE HORIZONTAL CONTROL PLAN ON SHEET HC-1.
2. FOR MEDIAN ISLAND STATION OFFSETS, LINE TABLES AND ELEVATIONS, SEE CONSTRUCTION DETAILS CD-1 THRU CD-5.

L-3

SCALE: 1" = 20'

0 10 20 30 40

PETERS ENGINEERING GROUP
952 POLLASKY AVENUE
CLOVIS, CALIFORNIA 93612
PHONE (559) 299-1544
WWW.PETERS-ENGINEERING.COM

CITY OF REEDLEY
PUBLIC WORKS DEPARTMENT
1733 9TH STREET
REEDLEY, CALIFORNIA 93654

	BY
DESIGN	PNG
DRAWN	PNG
CHECKED	DMP

REED AVENUE IMPROVEMENTS

LAYOUT – NORTH AVE. STA 7+00 TO STA 13+00

ORIGINAL SCALE IN INCHES FOR REDUCED PLANS 0 1 2 3

DISREGARD PRINTS BEARING EARLIER REVISION DATES →

REVISION DATES (PRELIMINARY STAGE ONLY)

DWG: S:\2014\14-013\Acad\Roundabout\Plans\14-013 L-1.dwg USER: Phil Ginther DATE: Jun 03, 2016 11:04am

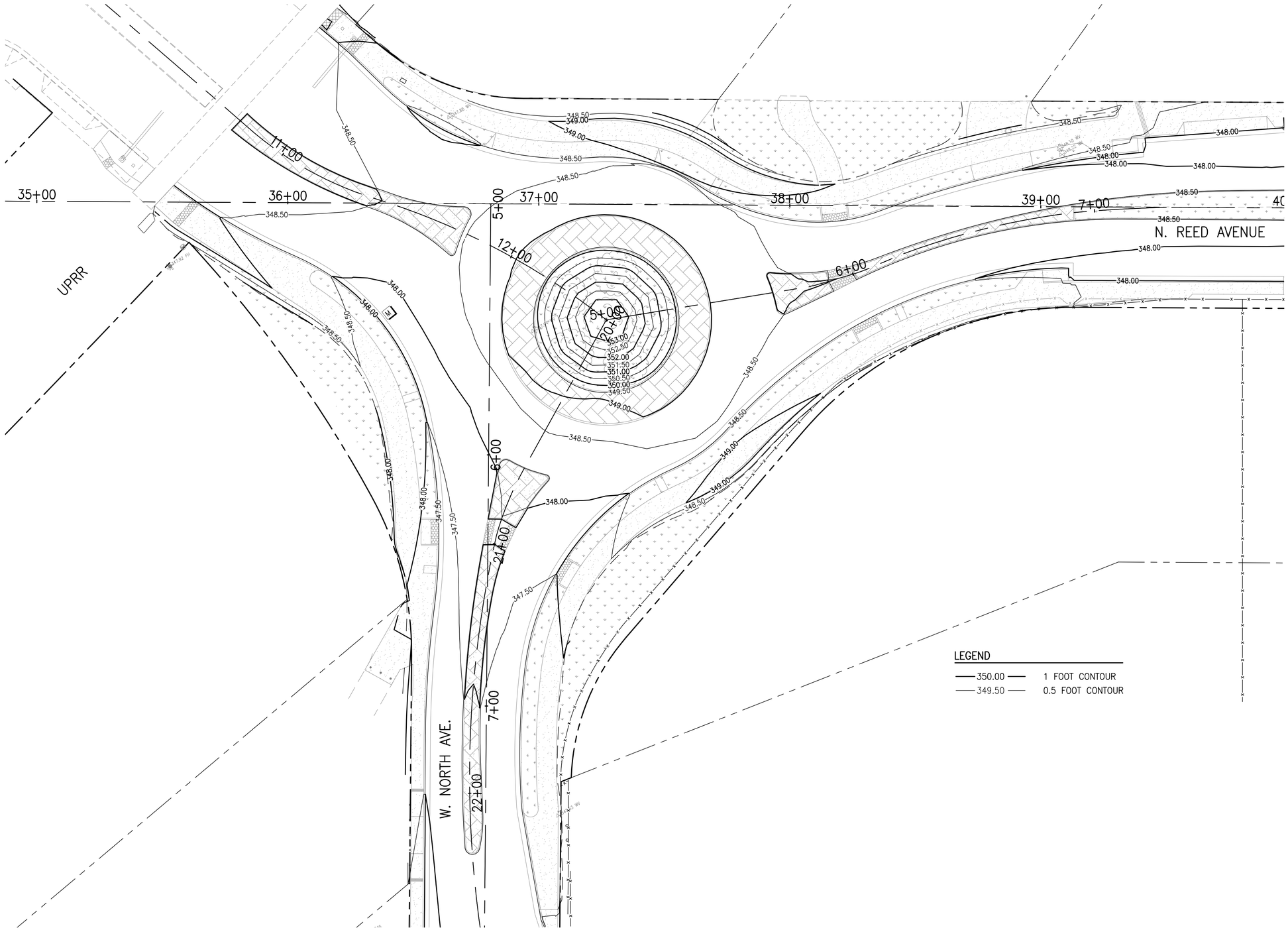

REGISTERED CIVIL ENGINEER

MAY 31, 2016

DATE

SHEET NO.	TOTAL SHEETS
8	52

REGISTERED PROFESSIONAL ENGINEER
DAVID M. PETERS
No. 52685
EXP: 12/31/16
CIVIL
STATE OF CALIFORNIA

G-1

SCALE: 1" = 20'

0 10 20 30 40

PETERS ENGINEERING GROUP
952 POLLASKY AVENUE
CLOVIS, CALIFORNIA 93612
PHONE (559) 299-1544
WWW.PETERS-ENGINEERING.COM

CITY OF REEDLEY
PUBLIC WORKS DEPARTMENT
1733 9TH STREET
REEDLEY, CALIFORNIA 93654

	BY
DESIGN	PNG
DRAWN	PNG
CHECKED	DMP

REED AVENUE IMPROVEMENTS
ROUNDABOUT CONTOUR GRADING

ORIGINAL SCALE IN INCHES FOR REDUCED PLANS 0 1 2 3

DISREGARD PRINTS BEARING EARLIER REVISION DATES

REVISION DATES (PRELIMINARY STAGE ONLY)

DWG: S:\2014\14-013\Acad\Roundabout\Planset\14-013 G-1.dwg USER: Phil Ginther DATE: Jun 03, 2016 11:05am

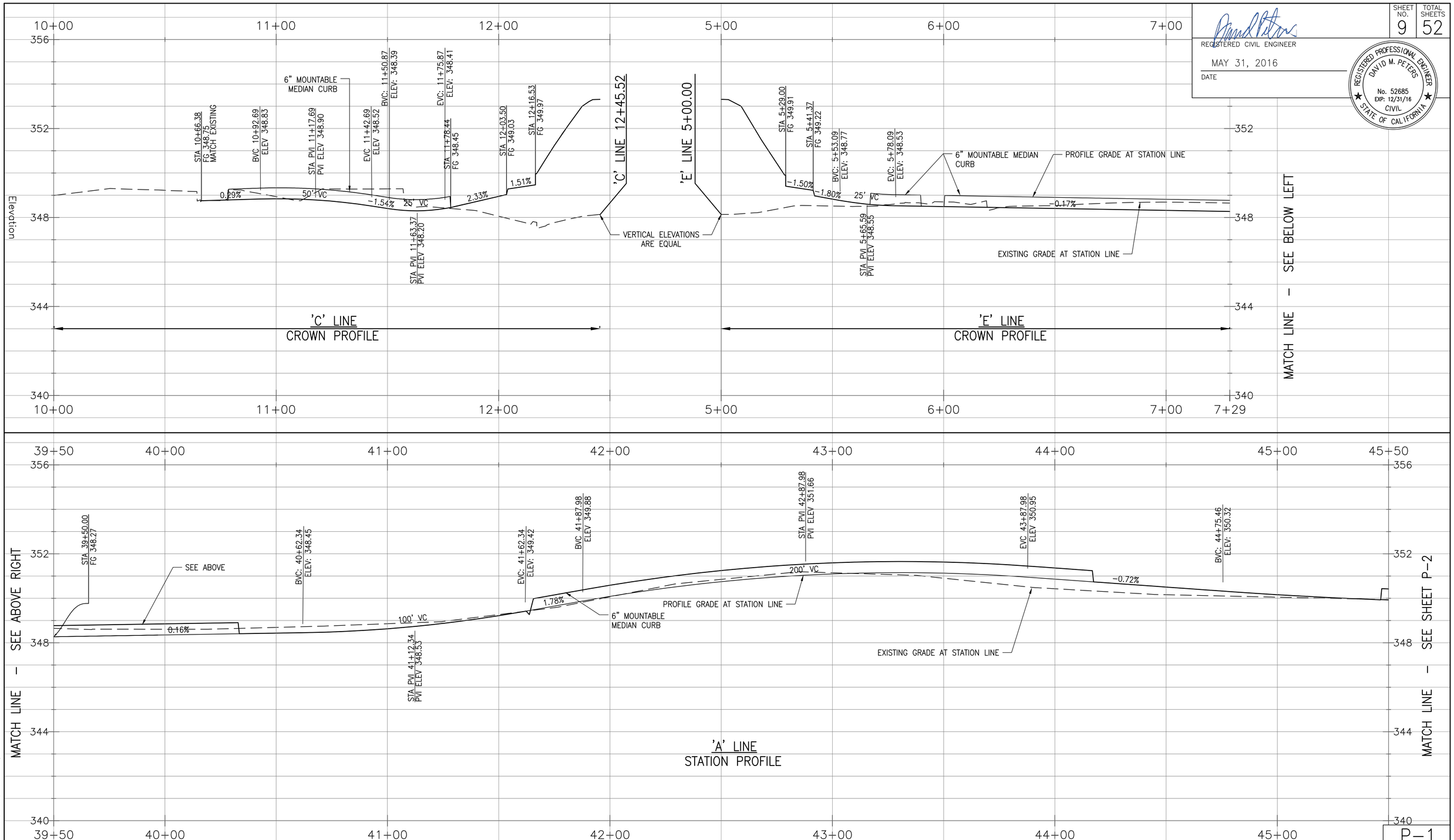

REGISTERED CIVIL ENGINEER

MAY 31, 2016

DATE

REGISTERED PROFESSIONAL ENGINEER
DAVID M. PETERS
No. 52685
EXP: 12/31/16
CIVIL
STATE OF CALIFORNIA

SHEET NO.	TOTAL SHEETS
9	52

P-1

HORIZ. SCALE: 1" = 20'
VERT. SCALE: 1" = 2'

0 10 20 30 40

PETERS ENGINEERING GROUP
952 POLLASKY AVENUE
CLOVIS, CALIFORNIA 93612
PHONE (559) 299-1544
WWW.PETERS-ENGINEERING.COM

CITY OF REEDLEY
PUBLIC WORKS DEPARTMENT
1733 9TH STREET
REEDLEY, CALIFORNIA 93654

	BY
DESIGN	PNG
DRAWN	PNG
CHECKED	DMP

ORIGINAL SCALE IN INCHES FOR REDUCED PLANS 0 1 2 3

REED AVENUE IMPROVEMENTS

PROFILES 'A' LINE, 'C' LINE, & 'E' LINE

DISREGARD PRINTS BEARING EARLIER REVISION DATES →

REVISION DATES (PRELIMINARY STAGE ONLY)

DWG: S:\2014\14-013\Local\Roundabout\Plans\1\14-013 P-1.dwg USER: Phil Gnther DATE: Jun 03, 2016 11:05am

SHEET NO.	TOTAL SHEETS
10	52

REGISTERED CIVIL ENGINEER

MAY 31, 2016

DATE

REGISTERED PROFESSIONAL ENGINEER
DAVID M. PETERS
No. 52685
EXP: 12/31/16
CIVIL
STATE OF CALIFORNIA

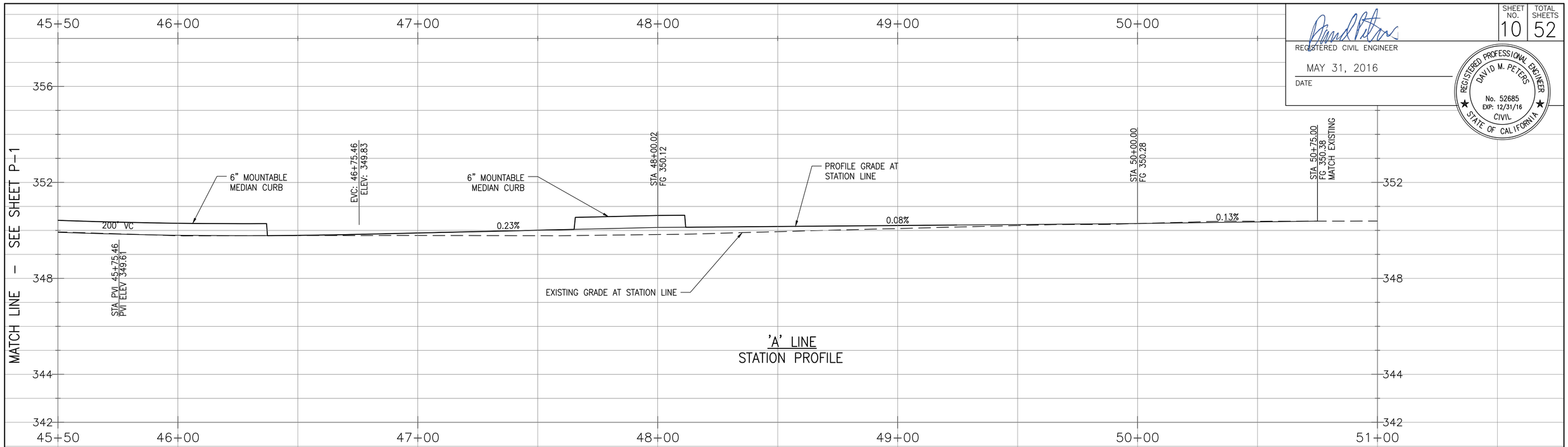

'A' LINE
STATION PROFILE

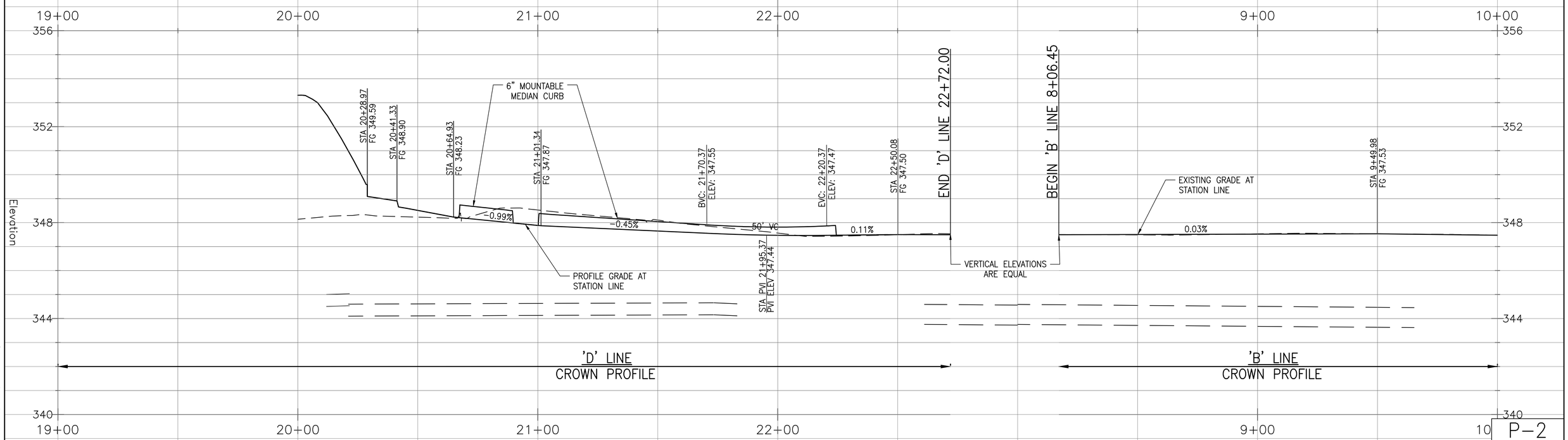

'D' LINE
CROWN PROFILE

'B' LINE
CROWN PROFILE

P-2

HORIZ. SCALE: 1" = 20'
VERT. SCALE: 1" = 2'

0 10 20 30 40

PETERS ENGINEERING GROUP
952 POLLASKY AVENUE
CLOVIS, CALIFORNIA 93612
PHONE (559) 299-1544
WWW.PETERS-ENGINEERING.COM

CITY OF REEDLEY
PUBLIC WORKS DEPARTMENT
1733 9TH STREET
REEDLEY, CALIFORNIA 93654

	BY
DESIGN	PNG
DRAWN	PNG
CHECKED	DMP

REED AVENUE IMPROVEMENTS

PROFILES 'A' LINE, 'B' LINE & 'D' LINE

ORIGINAL SCALE IN INCHES FOR REDUCED PLANS 0 1 2 3

DISREGARD PRINTS BEARING EARLIER REVISION DATES

REVISION DATES (PRELIMINARY STAGE ONLY)

DWG: S:\2014\14-013\Acad\Roundabout\Planset\14-013 P-1.dwg USER: Phil Ginther DATE: Jun 03, 2016 11:05am

SHEET NO.	TOTAL SHEETS
11	52

REGISTERED CIVIL ENGINEER

MAY 31, 2016

DATE

REGISTERED PROFESSIONAL ENGINEER
DAVID M. PETERS
No. 52685
EXP: 12/31/16
CIVIL
STATE OF CALIFORNIA

MATCH LINE - SEE SHEET P-2

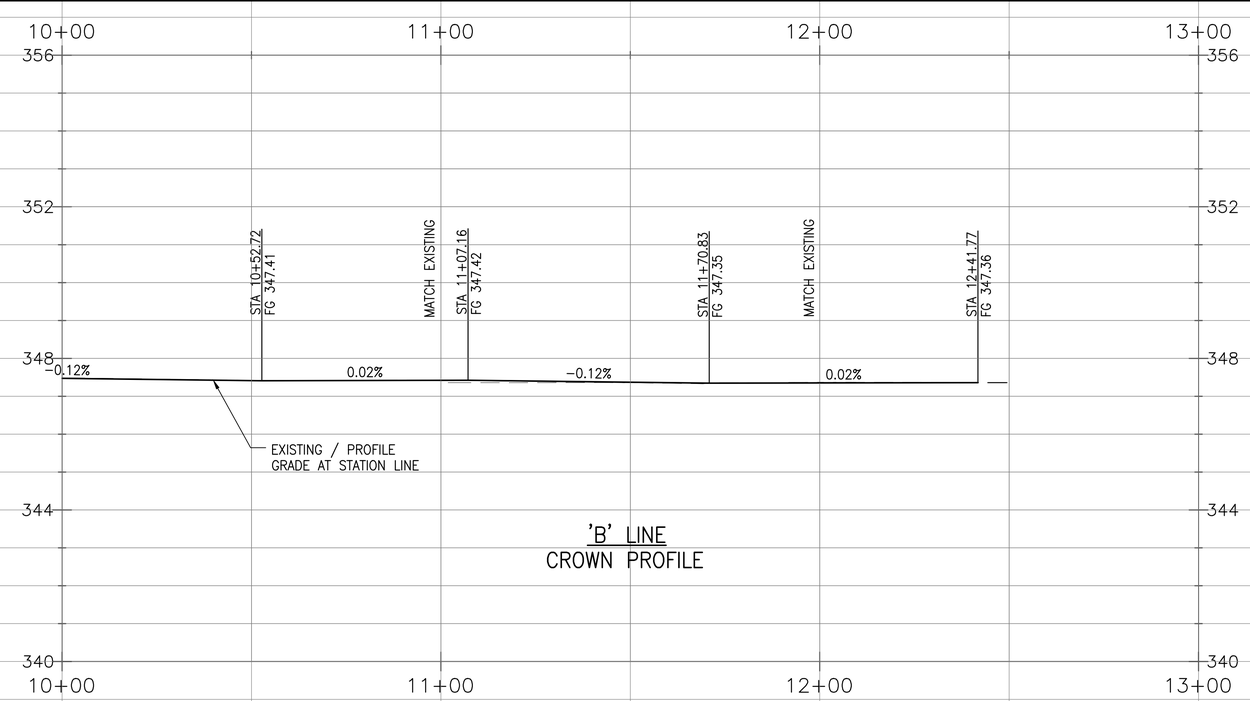

'B' LINE
CROWN PROFILE

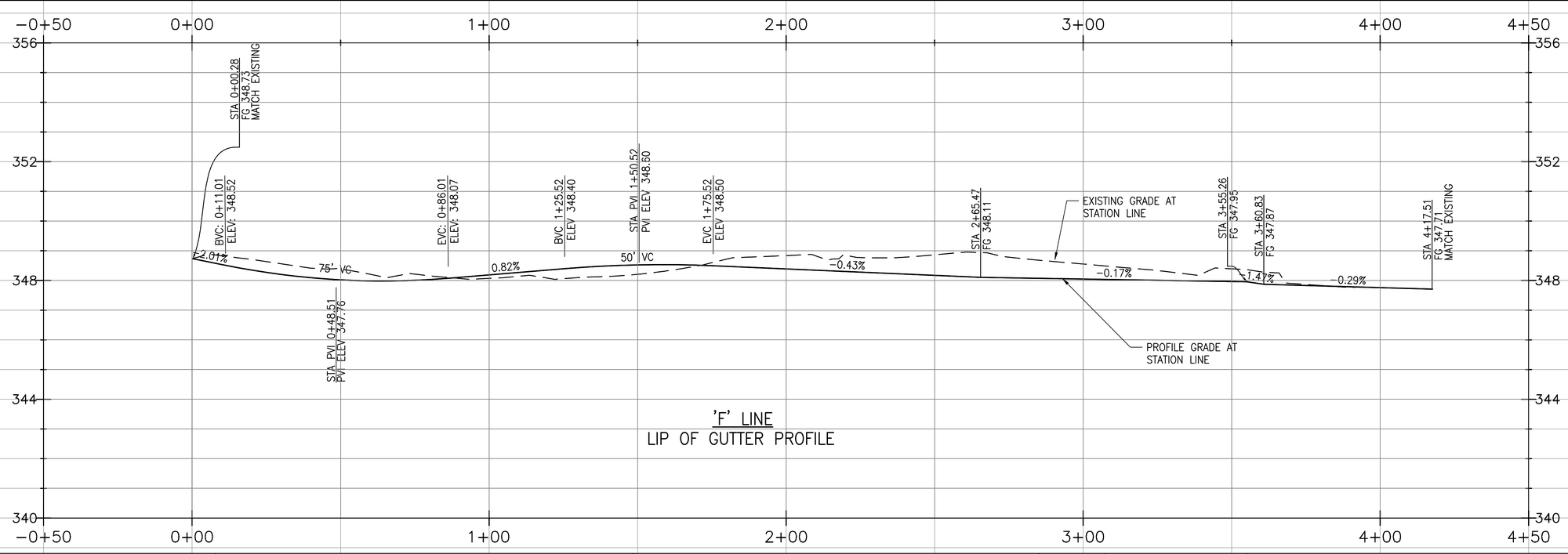

'F' LINE
LIP OF GUTTER PROFILE

P-3

HORIZ. SCALE: 1" = 20'
VERT. SCALE: 1" = 2'

0 10 20 30 40

PETERS ENGINEERING GROUP
952 POLLASKY AVENUE
CLOVIS, CALIFORNIA 93612
PHONE (559) 299-1544
WWW.PETERS-ENGINEERING.COM

CITY OF REEDLEY
PUBLIC WORKS DEPARTMENT
1733 9TH STREET
REEDLEY, CALIFORNIA 93654

	BY
DESIGN	PNG
DRAWN	PNG
CHECKED	DMP

ORIGINAL SCALE IN INCHES FOR REDUCED PLANS 0 1 2 3

REED AVENUE IMPROVEMENTS
PROFILES 'B' LINE & 'F' LINE

DISREGARD PRINTS BEARING EARLIER REVISION DATES →

REVISION DATES (PRELIMINARY STAGE ONLY)

DWG: S:\2014\14-013\Acad\Roundabout\Plnset\14-013 P-1.dwg USER: Phil Ginther DATE: Jun 03, 2016 11:05am

SHEET NO.	TOTAL SHEETS
12	52

REGISTERED CIVIL ENGINEER

MAY 31, 2016

DATE

REGISTERED PROFESSIONAL ENGINEER
DAVID M. PETERS
No. 52685
EXP: 12/31/16
CIVIL
STATE OF CALIFORNIA

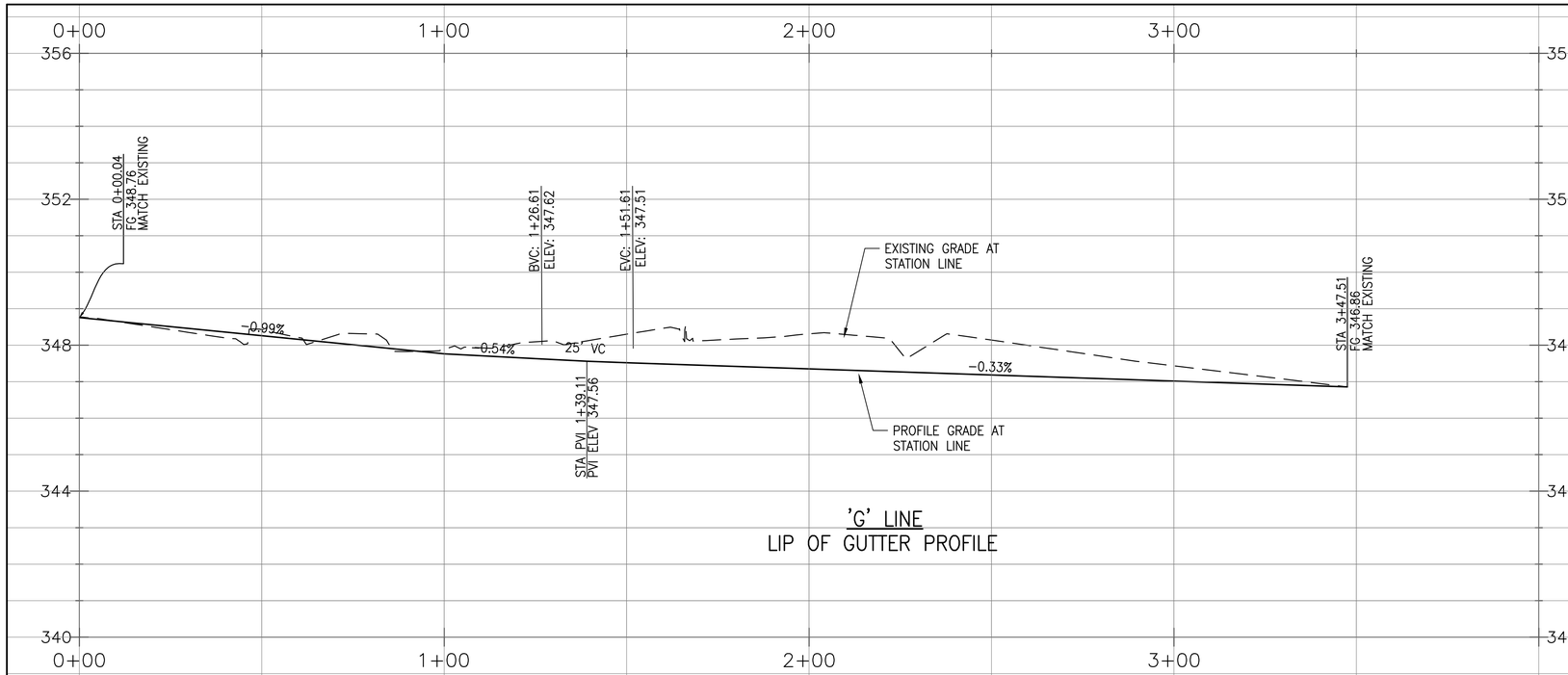

'G' LINE
LIP OF GUTTER PROFILE

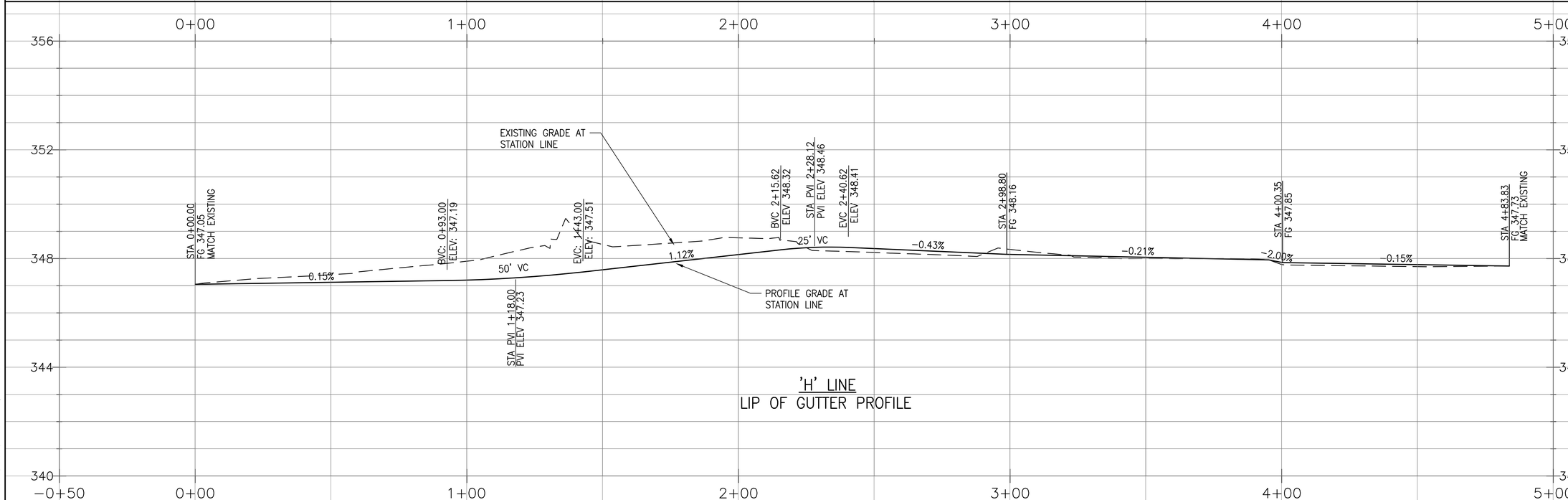

'H' LINE
LIP OF GUTTER PROFILE

P-4

HORIZ. SCALE: 1" = 20'
VERT. SCALE: 1" = 2'

0 10 20 30 40

PETERS ENGINEERING GROUP
952 POLLASKY AVENUE
CLOVIS, CALIFORNIA 93612
PHONE (559) 299-1544
WWW.PETERS-ENGINEERING.COM

CITY OF REEDLEY
PUBLIC WORKS DEPARTMENT
1733 9TH STREET
REEDLEY, CALIFORNIA 93654

	BY	
DESIGN	PNG	
DRAWN	PNG	
CHECKED	DMP	

ORIGINAL SCALE IN INCHES FOR REDUCED PLANS 0 1 2 3

REED AVENUE IMPROVEMENTS

PROFILES 'G' LINE & 'H' LINE

DISREGARD PRINTS BEARING EARLIER REVISION DATES →

REVISION DATES (PRELIMINARY STAGE ONLY)

DWG: S:\2014\14-013\Acad\Roundabout\Planset\14-013 P-1.dwg USER: Phil Ginther DATE: Jun 03, 2016 11:05am

SHEET NO.	TOTAL SHEETS
13	52

REGISTERED CIVIL ENGINEER

MAY 31, 2016

DATE

REGISTERED PROFESSIONAL ENGINEER
DAVID M. PETERS
No. 52685
EXP: 12/31/16
CIVIL
STATE OF CALIFORNIA

'I' PROFILE

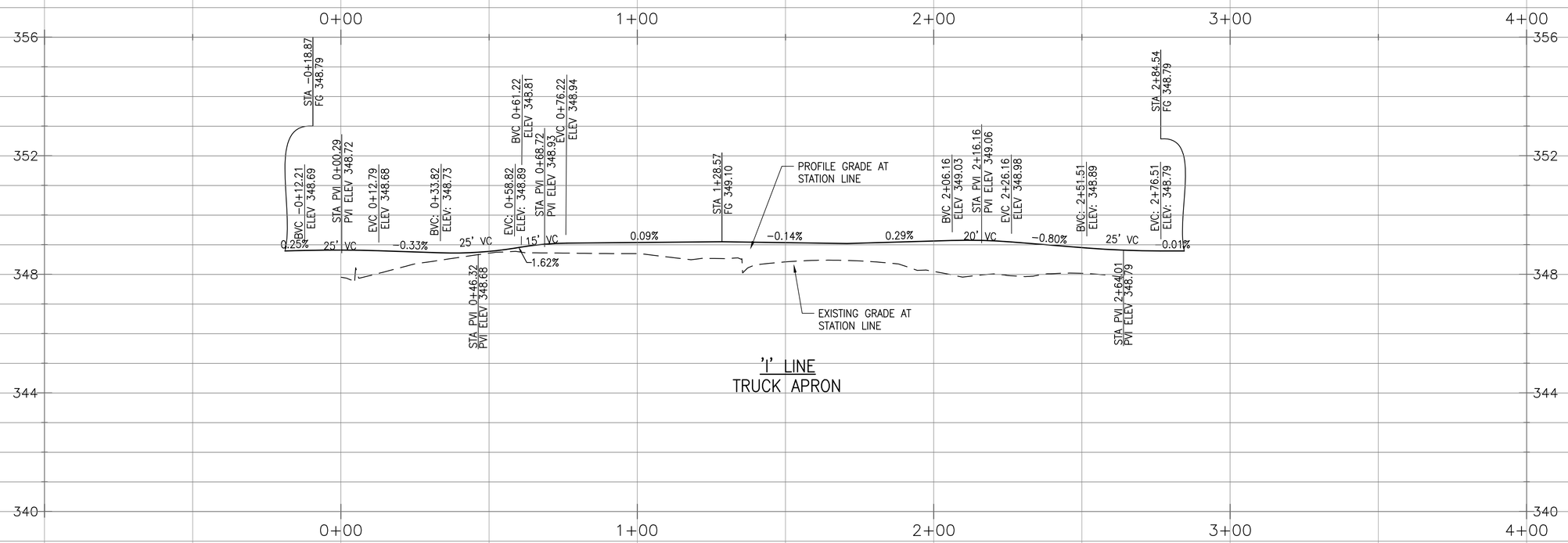

P-5

HORIZ. SCALE: 1" = 20'
VERT. SCALE: 1" = 2'

0 10 20 30 40

PETERS ENGINEERING GROUP
952 POLLASKY AVENUE
CLOVIS, CALIFORNIA 93612
PHONE (559) 299-1544
WWW.PETERS-ENGINEERING.COM

CITY OF REEDLEY
PUBLIC WORKS DEPARTMENT
1733 9TH STREET
REEDLEY, CALIFORNIA 93654

	BY
DESIGN	PNG
DRAWN	PNG
CHECKED	DMP

REED AVENUE IMPROVEMENTS

TRUCK APRON CURB PROFILE

ORIGINAL SCALE IN INCHES FOR REDUCED PLANS 0 1 2 3

DISREGARD PRINTS BEARING EARLIER REVISION DATES

REVISION DATES (PRELIMINARY STAGE ONLY)

DWG: S:\2014\14-013\Acad\Roundabout\Plorset\14-013 P-1.dwg USER: Phil Ginther DATE: Jun 03, 2016 11:05am

REGISTERED CIVIL ENGINEER

MAY 31, 2016

DATE

REGISTERED PROFESSIONAL ENGINEER DAVID M. PETERS No. 52685 EXP: 12/31/16 CIVIL STATE OF CALIFORNIA

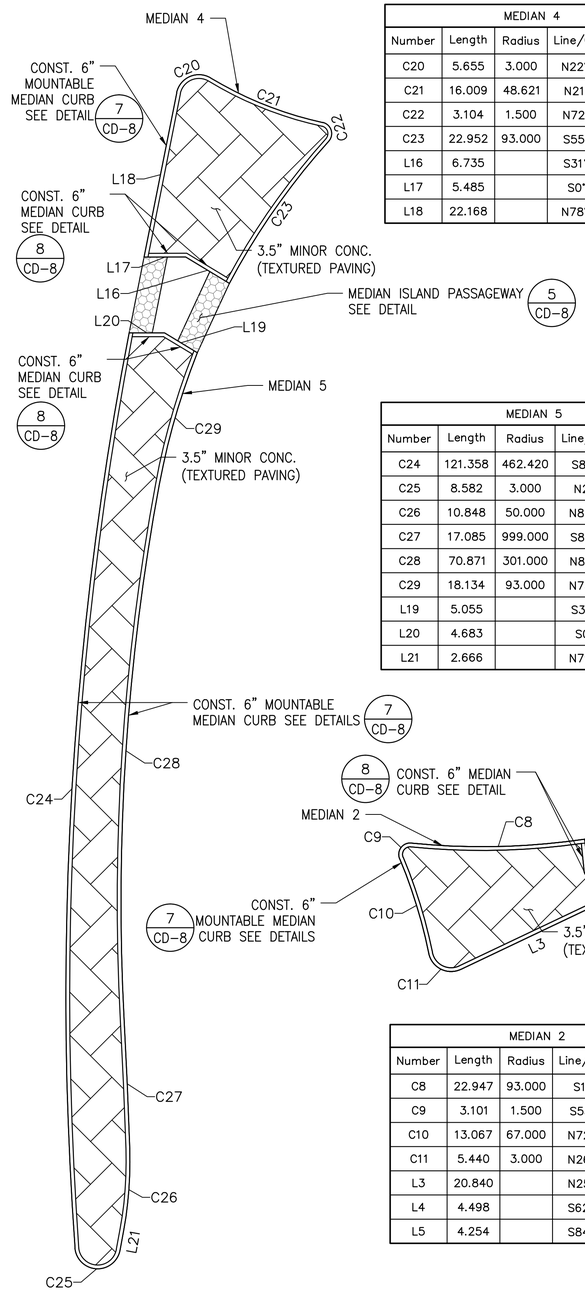

MEDIAN 4 & 5

MEDIAN 4			
Number	Length	Radius	Line/Chord Direction
C20	5.655	3.000	N22° 54' 29.67"W
C21	16.009	48.621	N21° 39' 37.14"E
C22	3.104	1.500	N72° 45' 08.08"E
C23	22.952	93.000	S55° 02' 35.03"E
L16	6.735		S31° 08' 14.82"W
L17	5.485		S0° 04' 18.59"E
L18	22.168		N78° 45' 56.38"W

MEDIAN 5			
Number	Length	Radius	Line/Chord Direction
C24	121.358	462.420	S86° 37' 18.52"E
C25	8.582	3.000	N2° 22' 58.52"E
C26	10.848	50.000	N85° 46' 56.07"W
C27	17.085	999.000	S87° 30' 44.13"W
C28	70.871	301.000	N86° 13' 56.96"W
C29	18.134	93.000	N73° 54' 04.25"W
L19	5.055		S31° 08' 14.82"W
L20	4.683		S0° 04' 18.59"E
L21	2.666		N79° 34' 00.04"W

MEDIAN 1			
Number	Length	Radius	Line/Chord Direction
C1	28.740	89.428	N9° 51' 05.85"E
C2	6.053	3.000	N61° 43' 59.98"E
C3	15.306	67.000	S67° 00' 44.87"E
C4	3.020	1.500	S15° 52' 49.24"E
C5	40.248	95.869	S29° 39' 34.51"W
C6	60.485	176.827	S29° 48' 48.60"W
C7	52.811	127.832	N31° 41' 53.81"E
L1	14.448		N19° 03' 30.64"E
L2	9.315		N45° 57' 43.12"W

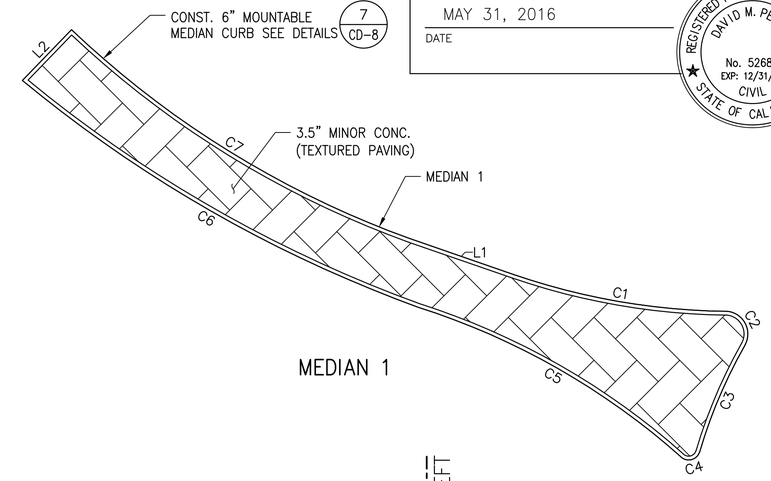

MEDIAN 1

LEGEND

SEE LANDSCAPE & IRRIGATION PLANS ON SEE SHEETS: PL-1, PP-1 & 2, IL-1, IP-1 & IP-2.

STAMPED CONCRETE MEDIAN ISLAND CAP/TRUCK APRON, SEE TYPICAL SECTIONS

NOTE TO CONTRACTOR:

1. FOR STATION OFFSETS & ELEVATIONS, SEE SHEET CD-3.
2. THE CURB ADJACENT TO THE MEDIAN ISLAND PASSAGE WAY IS 6" MEDIAN CURB. 8 CD-8

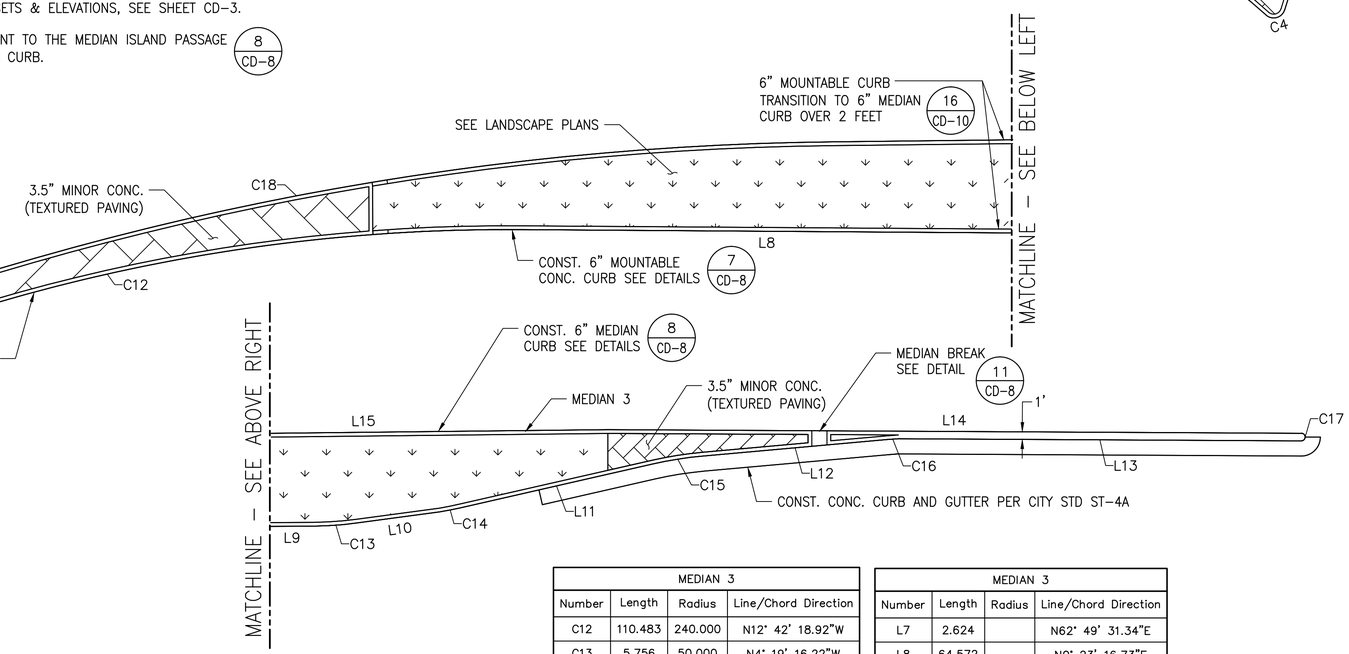

MEDIAN 2 & 3

MEDIAN 2			
Number	Length	Radius	Line/Chord Direction
C8	22.947	93.000	S1° 18' 40.98"E
C9	3.101	1.500	S53° 27' 59.11"E
C10	13.067	67.000	N72° 53' 50.46"E
C11	5.440	3.000	N26° 32' 27.28"E
L3	20.840		N25° 24' 10.15"W
L4	4.498		S62° 49' 31.34"W
L5	4.254		S84° 21' 53.53"W

MEDIAN 3			
Number	Length	Radius	Line/Chord Direction
C12	110.483	240.000	N12° 42' 18.92"W
C13	5.756	50.000	N4° 19' 16.22"W
C14	2.805	50.000	N11° 14' 21.43"W
C15	6.759	50.000	N8° 58' 25.12"W
C16	1.462	50.000	N4° 15' 47.29"W
C17	1.571	0.500	N90° 00' 00.00"W
C18	142.615	399.000	S10° 51' 45.74"E
C19	10.593	93.000	S17° 50' 20.83"E
L6	3.376		N84° 21' 53.53"E

MEDIAN 3			
Number	Length	Radius	Line/Chord Direction
L7	2.624		N62° 49' 31.34"E
L8	64.572		N0° 23' 16.73"E
L9	5.855		N0° 13' 37.33"W
L10	10.930		N7° 37' 08.43"W
L11	25.982		N12° 50' 47.33"W
L12	24.405		N5° 06' 02.92"W
L13	53.191		N0° 18' 10.85"E
L14	91.524		S0° 18' 10.91"W
L15	68.152		S0° 37' 23.05"E

CD-1

HORIZ. SCALE: 1" = 10'

0 5 10 15 20

PETERS ENGINEERING GROUP
952 POLLASKY AVENUE
CLOVIS, CALIFORNIA 93612
PHONE (559) 299-1544
WWW.PETERS-ENGINEERING.COM

CITY OF REEDLEY
PUBLIC WORKS DEPARTMENT
1733 9TH STREET
REEDLEY, CALIFORNIA 93654

	BY
DESIGN	PNG
DRAWN	PNG
CHECKED	DMP

REED AVENUE IMPROVEMENTS
MEDIAN ISLAND DETAILS

ORIGINAL SCALE IN INCHES FOR REDUCED PLANS 0 1 2 3

DISREGARD PRINTS BEARING EARLIER REVISION DATES

REVISION DATES (PRELIMINARY STAGE ONLY)

DWG: S:\2014\14-013\Local\Roundabout\Planset\14-013 CD-1.dwg USER: Phil Ginther DATE: Jun 03, 2016 11:06am

LEGEND

SEE LANDSCAPE & IRRIGATION PLANS ON SEE SHEETS: PL-1, PP-1 & 2, IL-1, IP-1 & IP-2.

STAMPED CONCRETE MEDIAN ISLAND CAP/TRUCK APRON, SEE TYPICAL SECTIONS

NOTE TO CONTRACTOR:

1. FOR STATION OFFSETS & ELEVATIONS, SEE SHEET CD-4.

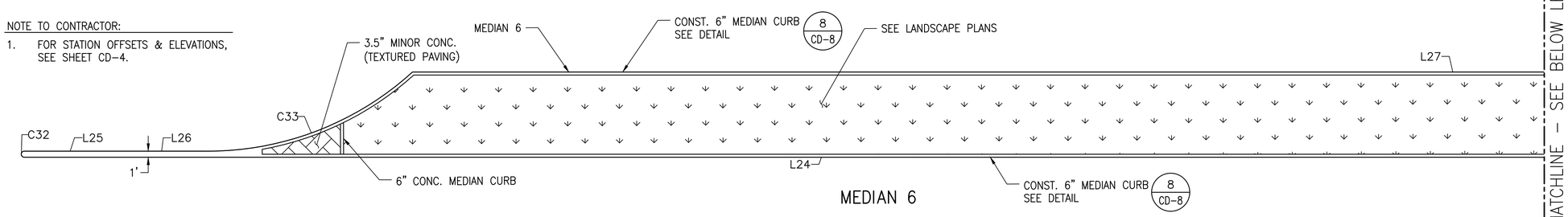

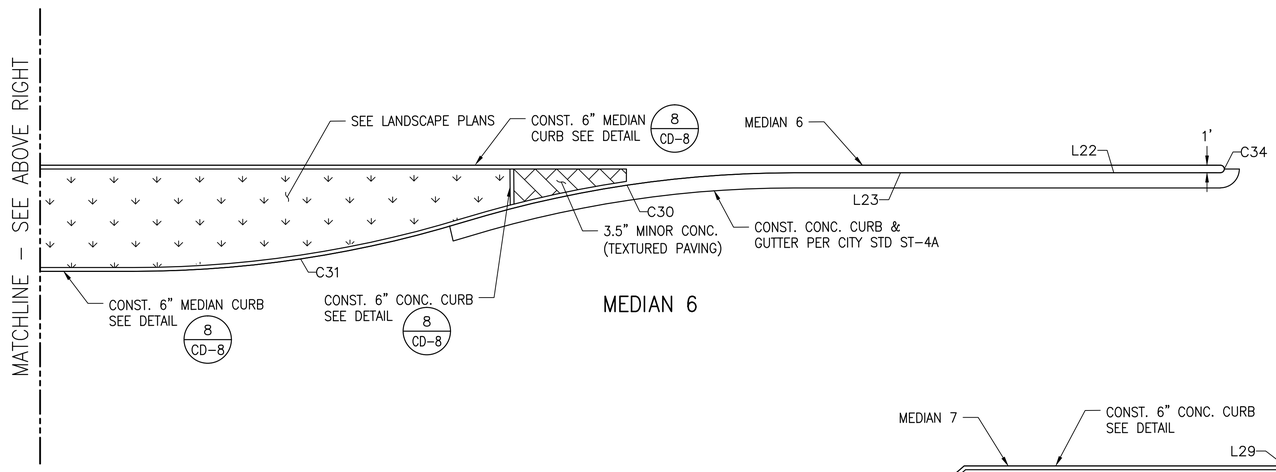

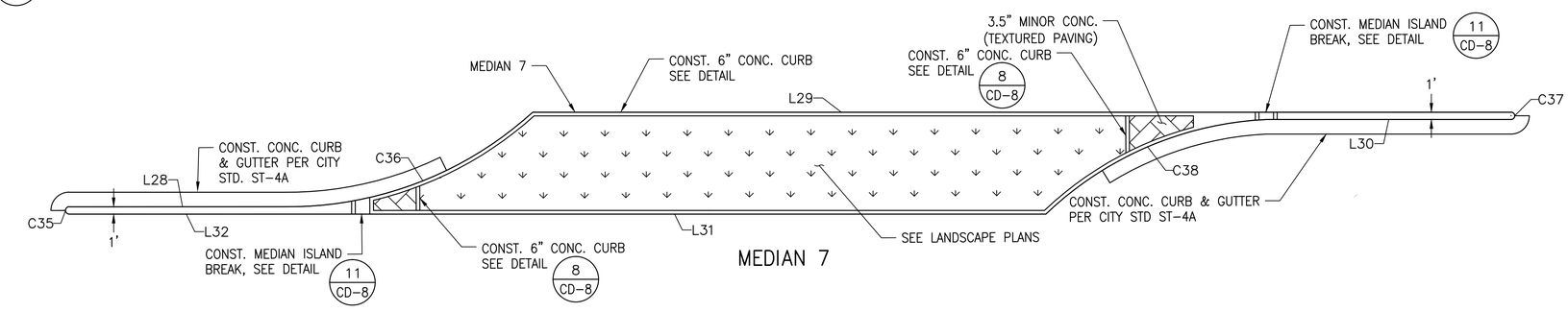

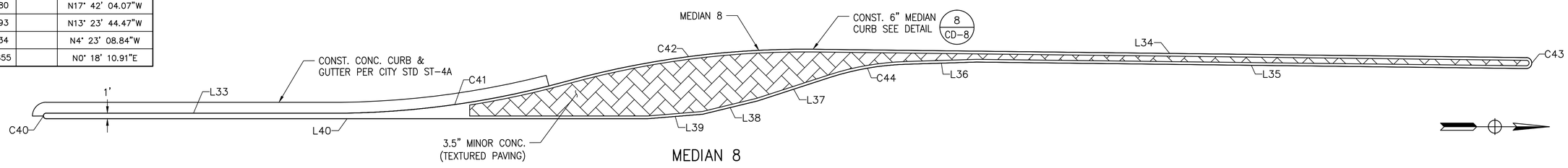

MEDIAN 6			
Number	Length	Radius	Line/Chord Direction
C30	44.220	149.323	S8° 10' 50.65"E
C31	44.220	149.323	S8° 10' 50.65"E
C32	1.571	0.500	N89° 41' 49.09"W
C33	36.886	50.000	N20° 49' 52.96"W
C34	1.571	0.500	N90° 00' 00.00"E
L22	28.153		S0° 18' 10.91"W
L23	28.153		S0° 18' 10.91"W
L24	261.350		S0° 18' 10.91"W
L25	15.000		N0° 18' 10.91"E
L26	15.000		N0° 18' 10.91"E
L27	341.173		N0° 18' 10.90"E

MEDIAN 7			
Number	Length	Radius	Line/Chord Direction
C35	1.565	0.500	N89° 42' 53.50"W
C36	35.771	50.026	N21° 28' 32.79"W
C37	1.571	0.500	N90° 00' 00.00"E
C38	33.642	46.957	S22° 57' 04.43"E
L28	31.116		N0° 17' 10.15"E
L29	134.313		N0° 18' 10.91"E
L30	33.619		S0° 18' 10.91"W
L31	101.952		S0° 18' 10.91"W
L32	32.126		S0° 18' 10.91"W

MEDIAN 8			
Number	Length	Radius	Line/Chord Direction
C40	1.571	0.500	S89° 41' 49.09"E
C41	41.745	161.300	S7° 47' 00.49"E
C42	45.530	161.300	S7° 06' 39.99"E
C43	3.142	1.000	N89° 01' 28.60"W
C44	14.204	50.000	N9° 33' 46.92"W
L33	53.786		S0° 18' 10.91"W
L34	130.235		S0° 58' 31.40"W
L35	100.354		N0° 58' 31.40"E
L36	12.859		N1° 25' 29.76"W
L37	13.880		N17° 42' 04.07"W
L38	10.293		N13° 23' 44.47"W
L39	10.034		N4° 23' 08.84"W
L40	109.855		N0° 18' 10.91"E

REGISTERED CIVIL ENGINEER

MAY 31, 2016

DATE

REGISTERED PROFESSIONAL ENGINEER DAVID M. PETERS No. 52685 EXP: 12/31/16 CIVIL STATE OF CALIFORNIA

SHEET NO. 15 TOTAL SHEETS 52

CD-2

HORIZ. SCALE: 1" = 10'

0 5 10 15 20

PETERS ENGINEERING GROUP

952 POLLASKY AVENUE
CLOVIS, CALIFORNIA 93612

PHONE (559) 299-1544
WWW.PETERS-ENGINEERING.COM

CITY OF REEDLEY
PUBLIC WORKS DEPARTMENT
1733 9TH STREET
REEDLEY, CALIFORNIA 93654

	BY
DESIGN	PNG
DRAWN	PNG
CHECKED	DMP

REED AVENUE IMPROVEMENTS

MEDIAN ISLAND DETAILS

ORIGINAL SCALE IN INCHES FOR REDUCED PLANS 0 1 2 3

DISREGARD PRINTS BEARING EARLIER REVISION DATES

REVISION DATES (PRELIMINARY STAGE ONLY)

DWG: S:\2014\14-013\Acad\Roundabout\Plotset\14-013 CD-1.dwg USER: Phil Gether DATE: Jun 03, 2016 11:06am

SHEET NO.	TOTAL SHEETS
16	52

REGISTERED CIVIL ENGINEER

MAY 31, 2016

DATE

REGISTERED PROFESSIONAL ENGINEER
DAVID M. PETERS
No. 52685
EXP: 12/31/16
CIVIL
STATE OF CALIFORNIA

LEGEND

LANDSCAPE & IRRIGATION SEE SHEETS: PL-1 & PL-2, P-1 & P-2, I-1 & I-2

STAMPED CONCRETE MEDIAN ISLAND CAP/TRUCK APRON, SEE TYPICAL SECTIONS

NOTE TO CONTRACTOR:

1. FOR STATION OFFSETS & ELEVATIONS, SEE SHEET CD-1.

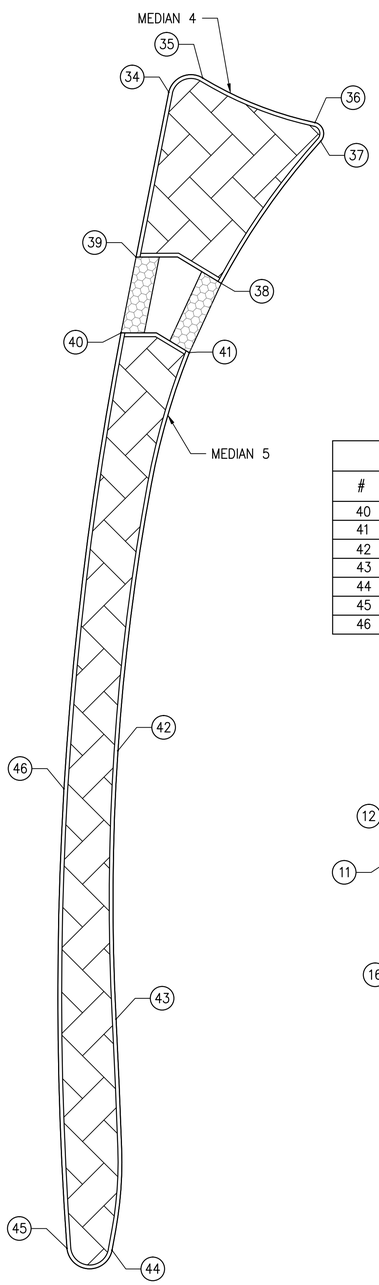

MEDIAN 4 & 5

MEDIAN 4		
#	STATION, OFFSET & ALIGNMENT	ELEVATION
34	20+70.98, 9.69 R, 'D'	P 348.04
35	20+67.40, 6.64 R, 'D'	P 348.14
36	20+65.37, 9.16 L, 'D'	P 348.25
37	20+67.16, 11.02 L, 'D'	P 348.20
38	20+91.31, 6.61 L, 'D'	P 347.89
39	20+91.48, 5.16 R, 'D'	P 347.85

MEDIAN 5		
#	STATION, OFFSET & ALIGNMENT	ELEVATION
40	21+01.17, 4.55 R, 'D'	P 347.76
41	21+01.83, 4.81 L, 'D'	P 347.81
42	21+55.72, 3.25 L, 'D'	P 347.56
43	21+91.44, 4.61 L, 'D'	P 347.40
44	22+22.17, 3.11 L, 'D'	P 347.41
45	22+21.54, 2.79 R, 'D'	P 347.38
46	21+61.29, 3.45 R, 'D'	P 347.51

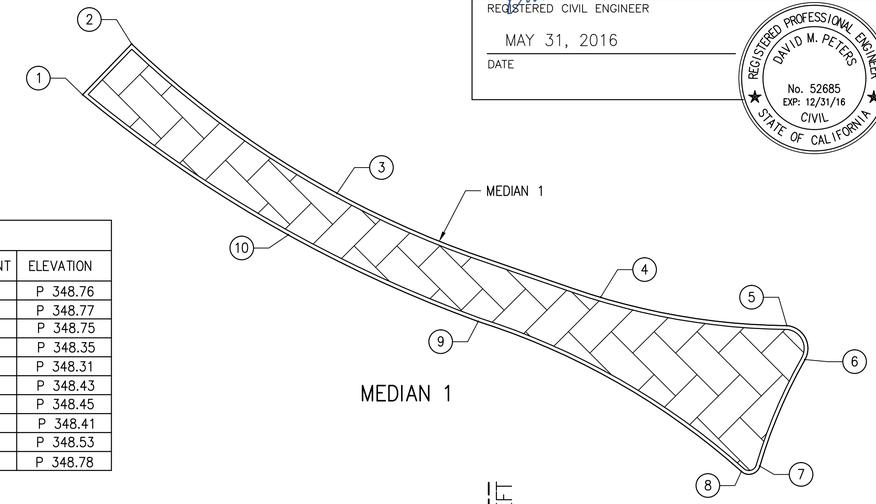

MEDIAN 1

MEDIAN 1		
#	STATION, OFFSET & ALIGNMENT	ELEVATION
1	10+78.03, 5.23 R, 'C'	P 348.76
2	10+78.48, 4.07 L, 'C'	P 348.77
3	11+12.96, 3.95 L, 'C'	P 348.75
4	11+51.07, 3.99 L, 'C'	P 348.35
5	11+74.75, 9.54 L, 'C'	P 348.31
6	11+78.67, 6.45 L, 'C'	P 348.43
7	11+79.15, 8.81 R, 'C'	P 348.45
8	11+77.15, 10.46 R, 'C'	P 348.41
9	11+36.84, 4.07 R, 'C'	P 348.53
10	11+10.03, 3.99 R, 'C'	P 348.78

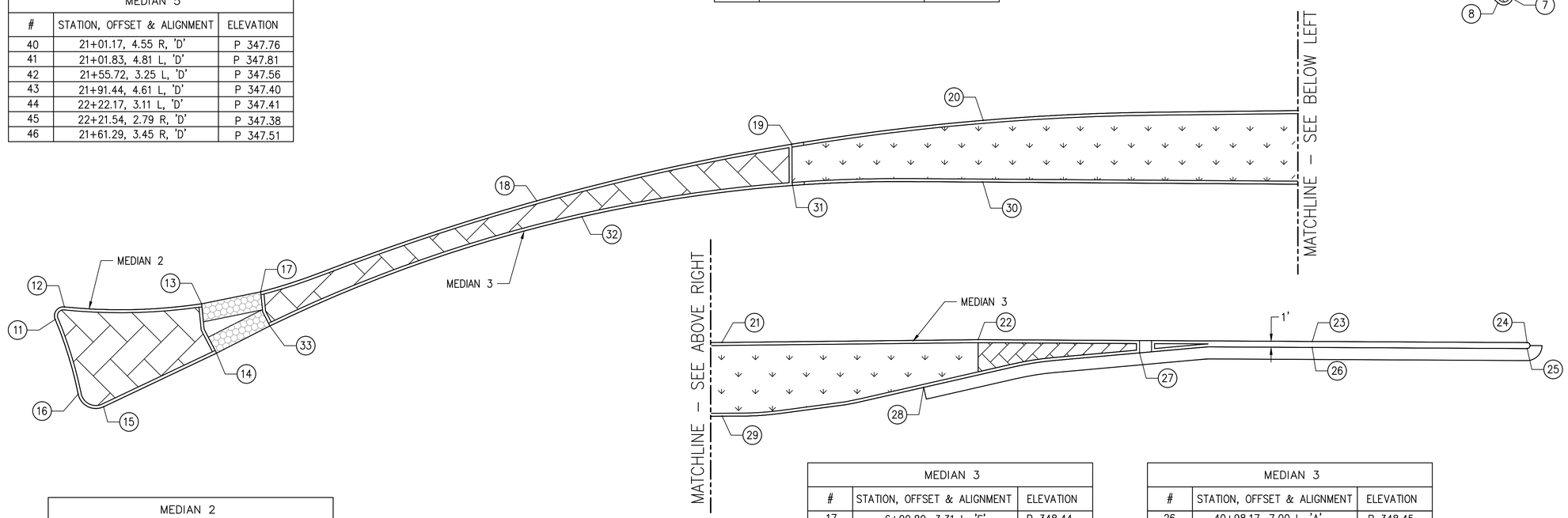

MEDIAN 2 & 3

MEDIAN 2		
#	STATION, OFFSET & ALIGNMENT	ELEVATION
11	5+65.69, 6.50 L, 'E'	P 348.60
12	5+67.54, 8.30 L, 'E'	P 348.56
13	5+90.78, 4.18 L, 'E'	P 348.46
14	5+90.82, 4.42 R, 'E'	P 348.42
15	5+71.30, 9.19 R, 'E'	P 348.49
16	5+67.47, 6.43 R, 'E'	P 348.55

MEDIAN 3		
#	STATION, OFFSET & ALIGNMENT	ELEVATION
17	6+00.80, 3.31 L, 'E'	P 348.44
18	6+49.32, 2.16 L, 'E'	P 348.39
19	6+92.40, 3.46 L, 'E'	P 348.27
20	7+24.25, 5.52 L, 'E'	P 348.21
21	39+99.75, 7.31 L, 'A'	P 348.19
22	40+42.47, 8.00 L, 'A'	P 348.25
23	40+98.17, 8.00 L, 'A'	P 348.43
24	41+34.00, 8.00 L, 'A'	P 348.77
25	41+34.00, 7.00 L, 'A'	P 348.80

MEDIAN 3		
#	STATION, OFFSET & ALIGNMENT	ELEVATION
26	40+98.17, 7.00 L, 'A'	P 348.45
27	40+69.39, 5.94 L, 'A'	P 348.34
28	40+33.42, 0.00 , 'A'	P 348.40
29	39+99.86, 4.98 R, 'A'	P 348.24
30	7+23.84, 4.76 R, 'E'	P 348.20
31	6+91.89, 2.92 R, 'E'	P 348.77
32	6+55.94, 2.27 R, 'E'	P 348.35
33	6+00.65, 2.58 R, 'E'	P 348.43

CD-3

HORIZ. SCALE: 1" = 10'

0 5 10 15 20

PETERS ENGINEERING GROUP
952 POLLASKY AVENUE
CLOVIS, CALIFORNIA 93612
PHONE (559) 299-1544
WWW.PETERS-ENGINEERING.COM

CITY OF REEDLEY
PUBLIC WORKS DEPARTMENT
1733 9TH STREET
REEDLEY, CALIFORNIA 93654

	BY
DESIGN	PNG
DRAWN	PNG
CHECKED	DMP

REED AVENUE IMPROVEMENTS

MEDIAN ISLAND DETAILS

ORIGINAL SCALE IN INCHES FOR REDUCED PLANS 0 1 2 3

DISREGARD PRINTS BEARING EARLIER REVISION DATES

REVISION DATES (PRELIMINARY STAGE ONLY)

DWG: S:\2014\14-013\Acad\Roundabout\Planset\14-013 CD-3.dwg USER: Phil Ginther DATE: Jun 03, 2016 11:07am

REGISTERED CIVIL ENGINEER

MAY 31, 2016

DATE

REGISTERED PROFESSIONAL ENGINEER DAVID M. PETERS No. 52685 EXP: 12/31/16 CIVIL STATE OF CALIFORNIA

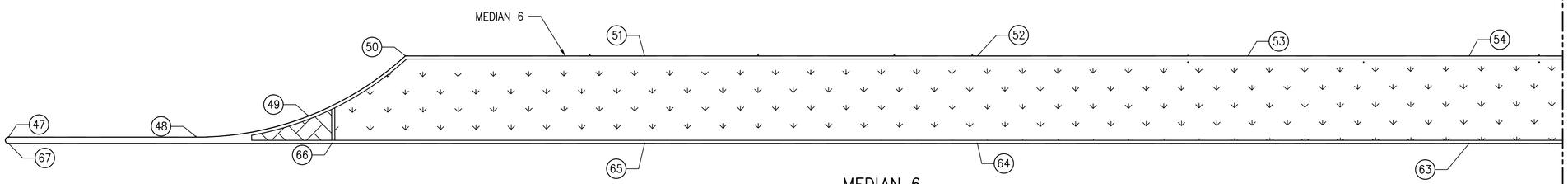

MEDIAN 6

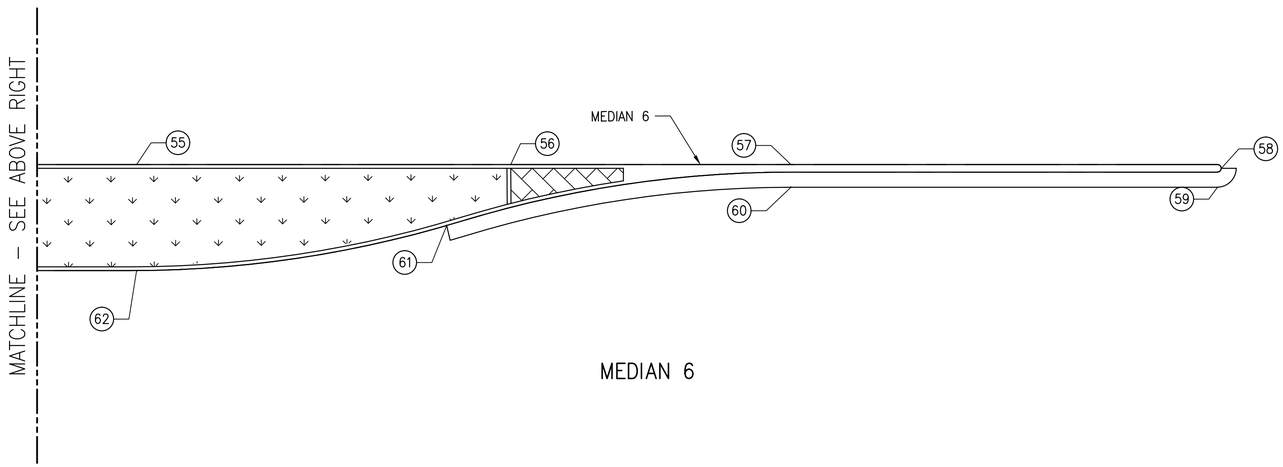

MEDIAN 6

MEDIAN 6		
#	STATION, OFFSET & ALIGNMENT	ELEVATION
47	41+13.81, 5.00 R, 'A'	P 349.15
48	41+43.81, 4.87 R, 'A'	P 349.02
49	41+61.78, 1.49 R, 'A'	P 349.43
50	41+77.44, 8.00 L, 'A'	P 349.95
51	42+15.79, 8.00 L, 'A'	P 349.96
52	42+69.17, 8.00 L, 'A'	P 350.39
53	43+12.53, 8.00 L, 'A'	P 350.67
54	43+48.02, 8.00 L, 'A'	P 350.82
55	43+02.95, 8.06 L, 'A'	P 351.27
56	44+25.33, 8.00 L, 'A'	P 351.01
57	44+62.30, 8.00 L, 'A'	P 351.43
58	45+19.11, 7.48 L, 'A'	P 351.56
59	43+02.94, 7.00 L, 'A'	P 351.51
60	44+62.31, 5.00 L, 'A'	P 350.31
61	44+16.88, 0.05 R, 'A'	P 351.01
62	43+76.04, 5.99 R, 'A'	P 351.18
63	43+48.02, 6.00 R, 'A'	P 351.45
64	42+69.17, 6.00 R, 'A'	P 351.33
65	42+15.79, 6.00 R, 'A'	P 350.69
66	41+65.64, 6.00 R, 'A'	P 349.85
67	41+13.81, 6.00 R, 'A'	P 349.13

LEGEND

SEE LANDSCAPE & IRRIGATION PLANS ON SEE SHEETS: PL–1, PP–1 & 2, IL–1, IP–1 & IP–2.

STAMPED CONCRETE MEDIAN ISLAND CAP/TRUCK APRON, SEE TYPICAL SECTIONS

NOTE TO CONTRACTOR:

1. FOR STATION OFFSETS & ELEVATIONS, SEE SHEET CD–2.

MEDIAN 7		
#	STATION, OFFSET & ALIGNMENT	ELEVATION
68	44+95.13, 3.00 R, 'A'	P 350.11
69	45+25.38, 3.00 R, 'A'	P 349.96
70	45+46.94, 0.00 L, 'A'	P 350.43
71	45+58.77, 8.00 L, 'A'	P 350.24
72	46+04.32, 8.00 L, 'A'	P 350.14
73	46+40.17, 8.00 L, 'A'	P 350.14
74	46+93.09, 8.00 L, 'A'	P 350.22
75	46+93.10, 5.00 L, 'A'	P 349.78
76	46+76.31, 5.00 L, 'A'	P 349.74
77	46+59.52, 5.00 L, 'A'	P 349.71
78	46+36.97, 0.01 R, 'A'	P 350.24
79	46+29.22, 6.00 R, 'A'	P 350.17
80	46+06.13, 6.00 R, 'A'	P 350.15
81	45+60.50, 6.00 R, 'A'	P 350.25
82	45+43.37, 6.00 R, 'A'	P 350.32
83	45+24.79, 6.00 R, 'A'	P 350.40
84	45+11.20, 6.00 R, 'A'	P 350.46
85	44+95.14, 6.00 R, 'A'	P 350.54
86	44+94.65, 5.50 R, 'A'	P 350.56

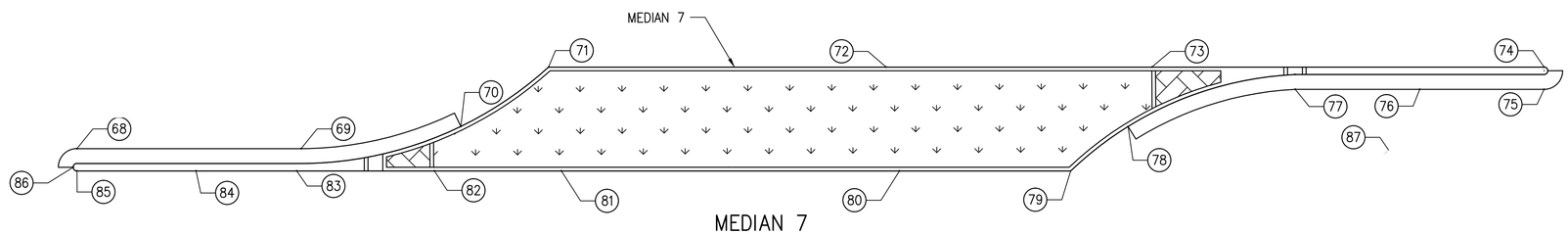

MEDIAN 7

MEDIAN 8		
#	STATION, OFFSET & ALIGNMENT	ELEVATION
87	46+73.37, 5.00 R, 'A'	P 349.73
88	47+27.16, 5.00 R, 'A'	P 349.85
89	47+65.16, 0.00 , 'A'	P 350.04
90	47+90.67, 5.37 L, 'A'	P 349.99
91	48+13.37, 6.71 L, 'A'	P 350.14
92	48+78.49, 5.95 L, 'A'	P 350.22
93	49+07.52, 5.61 L, 'A'	P 350.24
94	49+43.60, 5.18 L, 'A'	P 350.14
95	49+43.58, 3.18 L, 'A'	P 350.15
96	49+07.50, 3.61 L, 'A'	P 350.28
97	48+78.11, 3.95 L, 'A'	P 350.27
98	48+43.23, 4.36 L, 'A'	P 350.24
99	48+30.37, 3.97 L, 'A'	P 350.23
100	48+16.43, 1.55 L, 'A'	P 350.17
101	48+03.23, 2.74 R, 'A'	P 350.06
102	47+93.23, 5.18 R, 'A'	P 349.99
103	47+83.23, 6.00 R, 'A'	P 349.96
104	47+55.19, 6.00 R, 'A'	P 349.90
105	47+28.30, 6.00 R, 'A'	P 349.84
106	46+73.37, 6.00 R, 'A'	P 349.71

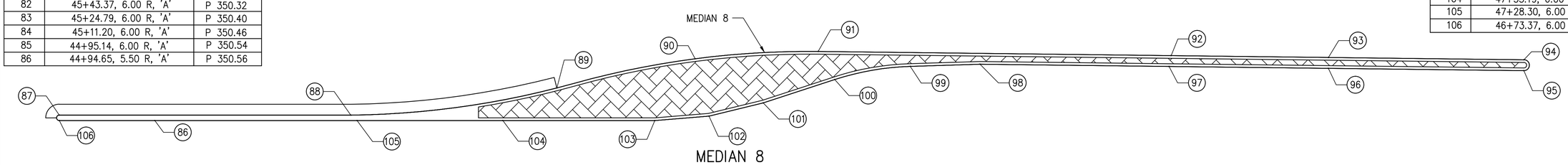

MEDIAN 8

CD–4

HORIZ. SCALE: 1" = 10'

0 5 10 15 20

PETERS ENGINEERING GROUP
952 POLLASKY AVENUE
CLOVIS, CALIFORNIA 93612
PHONE (559) 299-1544
WWW.PETERS-ENGINEERING.COM

CITY OF REEDLEY
PUBLIC WORKS DEPARTMENT
1733 9TH STREET
REEDLEY, CALIFORNIA 93654

	BY
DESIGN	PNG
DRAWN	PNG
CHECKED	DMP

REED AVENUE IMPROVEMENTS

MEDIAN ISLAND DETAILS

ORIGINAL SCALE IN INCHES FOR REDUCED PLANS 0 1 2 3

DISREGARD PRINTS BEARING EARLIER REVISION DATES

REVISION DATES (PRELIMINARY STAGE ONLY)

DWG: S:\2014\14-013\Acad\Roundabout\Planset\14-013 CD-3.dwg USER: Phil Ginther DATE: Jun 03, 2016 11:07am

SHEET NO.	TOTAL SHEETS
18	52

REGISTERED CIVIL ENGINEER

MAY 31, 2016

DATE

REGISTERED PROFESSIONAL ENGINEER
DAVID M. PETERS
No. 52685
EXP: 12/31/16
CIVIL
STATE OF CALIFORNIA

CENTER MEDIAN		
#	STATION, OFFSET & ALIGNMENT	ELEVATION
1	1+49.81, 0.00 , 'I'	P 348.95
2	1+15.00, 0.00 , 'I'	P 348.97
3	0+97.31, 0.01 L, 'I'	P 348.95
4	0+74.91, 0.00 , 'I'	P 348.93
5	0+42.49, 0.05 R, 'I'	P 348.61
6	0+20.98, 0.01 L, 'I'	P 348.65
7	2+54.22, 0.01 L, 'I'	P 348.75
8	2+15.27, 0.01 L, 'I'	P 349.03
9	1+85.70, 0.01 L, 'I'	P 348.97

'I' – ALIGNMENT			
Number	Length	Radius	Line/Chord Direction
C50	149.811	42.000	N44° 35' 24.90"W
C51	114.083	42.000	S44° 35' 24.90"E

NOTE TO CONTRACTOR:

1. THE CONTRACTOR SHALL SUBMIT CONCRETE PIGMENT COLOR FOR BRICK & STONE STAMPED PATTERN FOR THE TRUCK APRONS, TO THE CITY ENGINEER FOR APPROVAL PRIOR TO PREPARING MOCK-UP.
2. ALL CONCRETE STAMP PATTERNS AND COLOR PIGMENTS TO BE APPROVED BY ENGINEER BASED ON 4'X4' PREPARED MOCK-UP.
3. SEE SHEET P-5 FOR MOUNTABLE CURB PROFILE FOR ADDITIONAL ELEVATION INFORMATION.

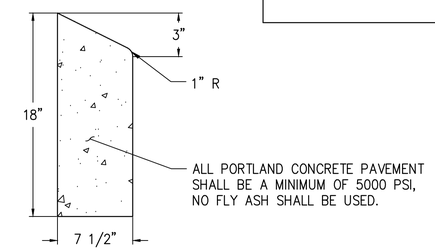

MOUNTABLE CURB TRUCK APRON DETAIL

NTS

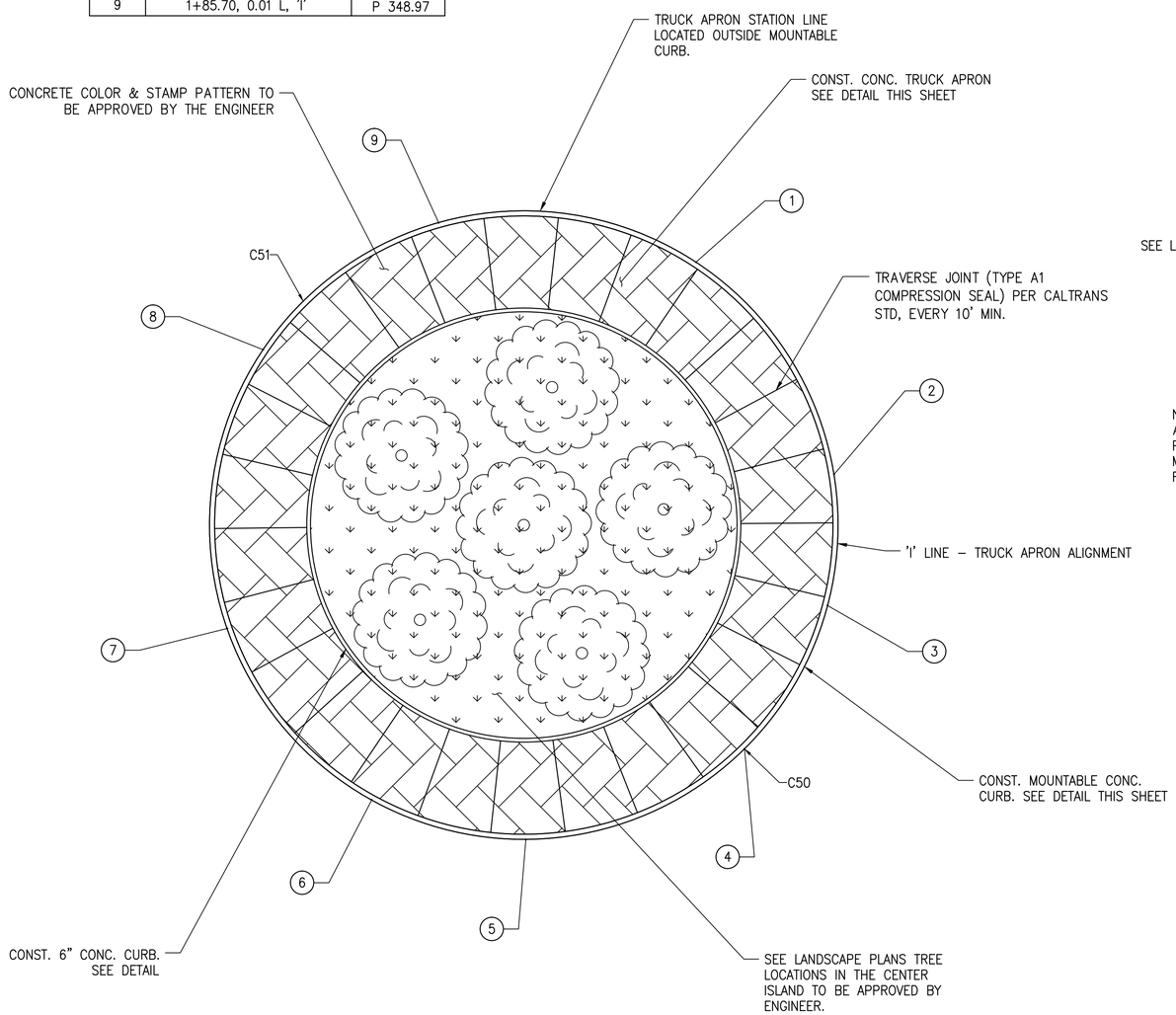

CENTER ISLAND MEDIAN

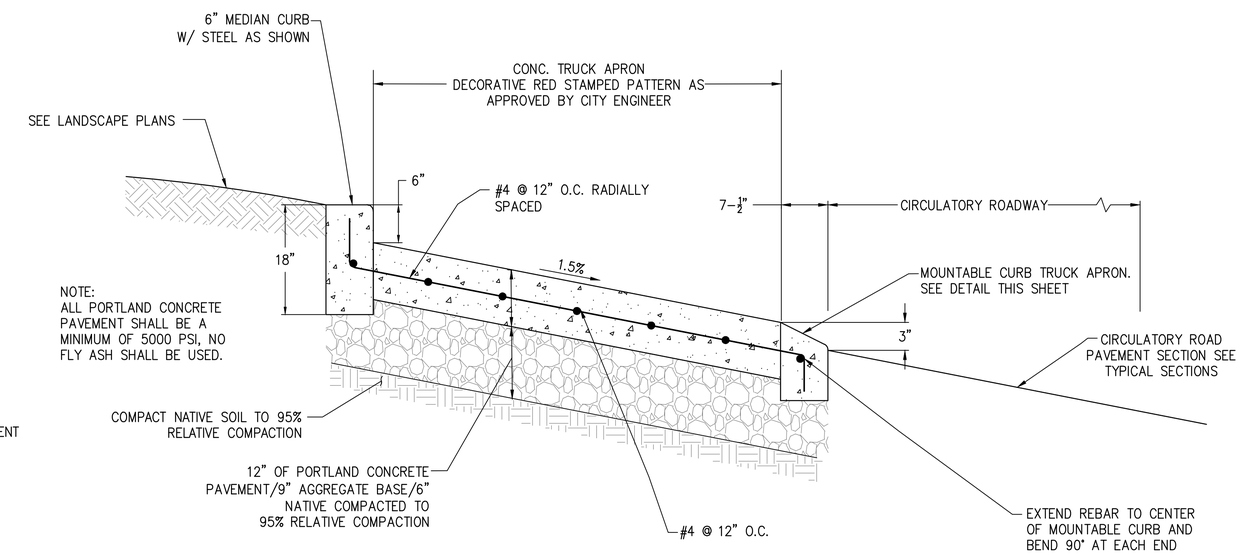

TRUCK APRON DETAIL

NTS

CD-5

HORIZ. SCALE: 1" = 10'

0 5 10 15 20

PETERS ENGINEERING GROUP
952 POLLASKY AVENUE
CLOVIS, CALIFORNIA 93612
PHONE (559) 299-1544
WWW.PETERS-ENGINEERING.COM

CITY OF REEDLEY
PUBLIC WORKS DEPARTMENT
1733 9TH STREET
REEDLEY, CALIFORNIA 93654

	BY
DESIGN	PNG
DRAWN	PNG
CHECKED	DMP

REED AVENUE IMPROVEMENTS

CENTER ISLAND DETAILS

ORIGINAL SCALE IN INCHES FOR REDUCED PLANS 0 1 2 3

DISREGARD PRINTS BEARING EARLIER REVISION DATES

REVISION DATES (PRELIMINARY STAGE ONLY)

DWG: S:\2014\14-013\Acad\Roundabout\Planset\14-013 CD-3.dwg USER: Phil Gerther DATE: Jun 03, 2016 11:07am

REGISTERED CIVIL ENGINEER

MAY 31, 2016

DATE

REGISTERED PROFESSIONAL ENGINEER — DAVID M. PETERS — No. 52685 — EXP: 12/31/16 — CIVIL — STATE OF CALIFORNIA

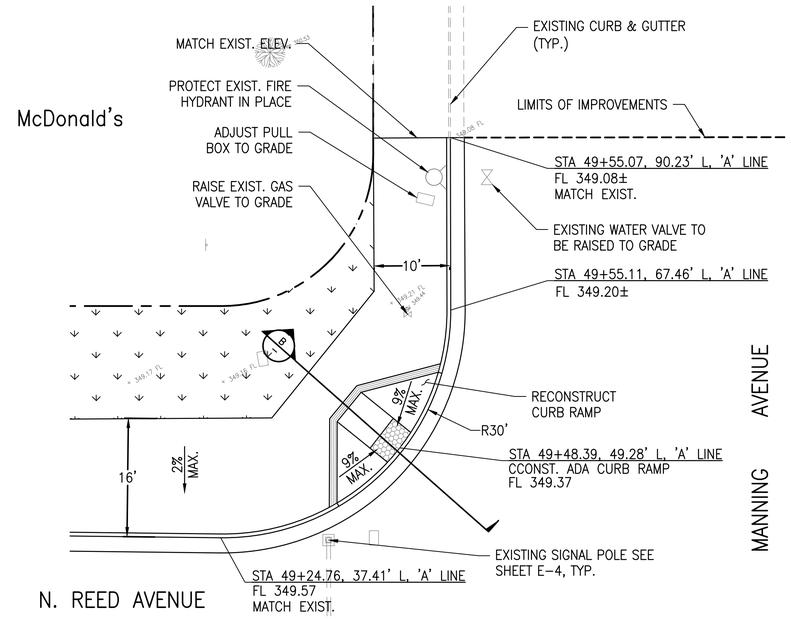

CURB RAMP – SOUTHWEST CORNER (1/–)

SCALE: 1" = 10'

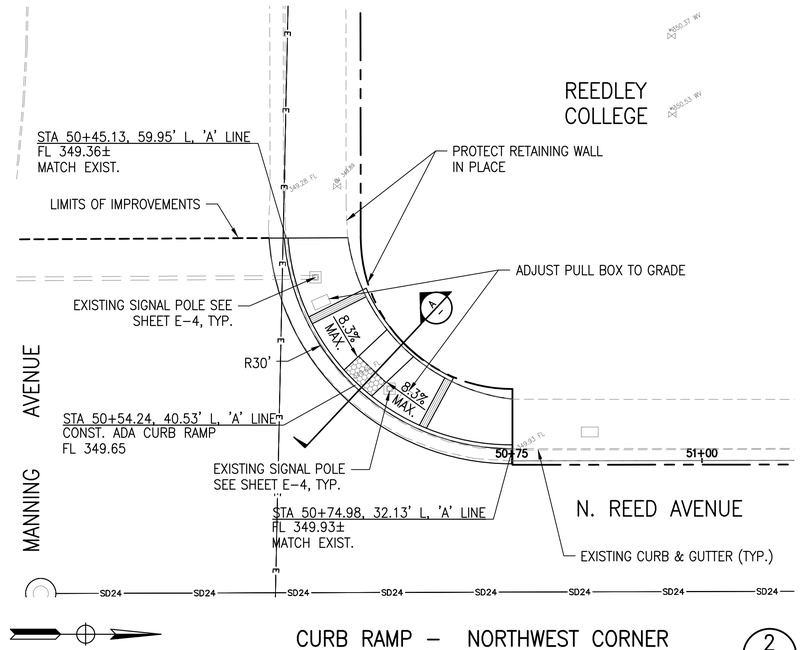

CURB RAMP – NORTHWEST CORNER (2/–)

SCALE: 1" = 10'

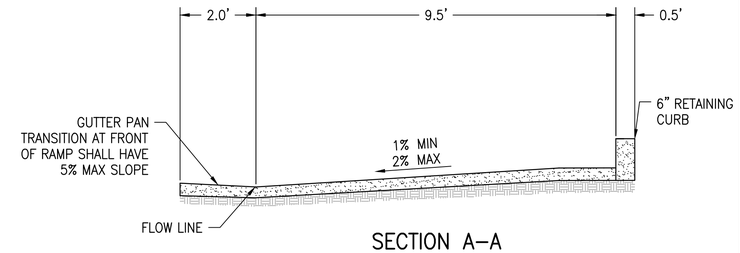

SECTION A–A

SCALE: 1" = 2'

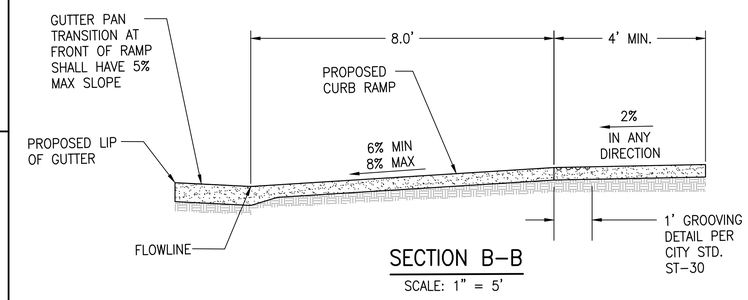

SECTION B–B

SCALE: 1" = 5'

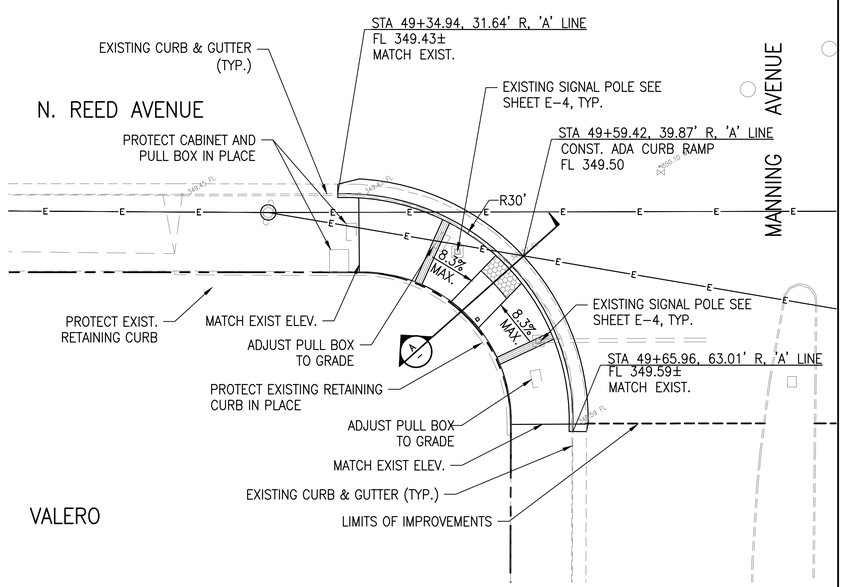

CURB RAMP – SOUTHEAST CORNER (3/–)

SCALE: 1" = 10'

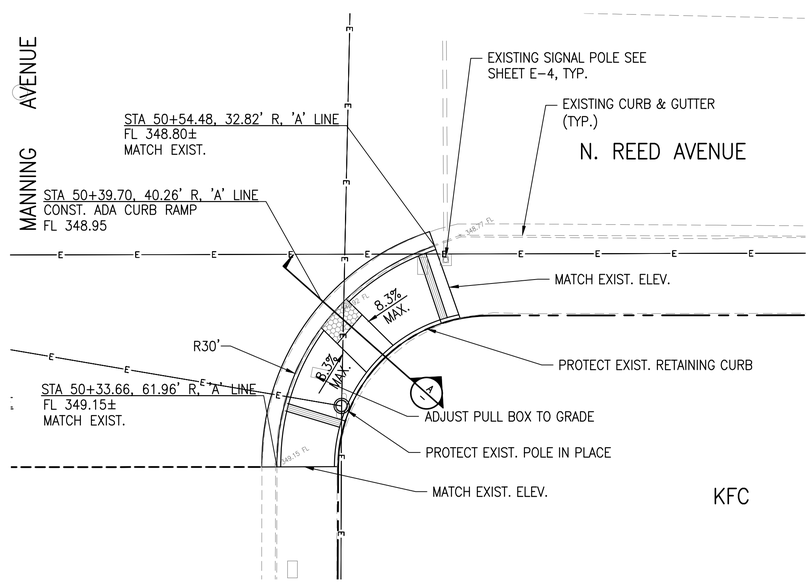

CURB RAMP – NORTHEAST CORNER (4/–)

SCALE: 1" = 10'

NOTES TO CONTRACTOR: (FOR SHEETS CD–1 THRU CD–11)

1. ALL CONSTRUCTION OF CONCRETE CURB, GUTTER PAN, RETAINING CURB, VALLEY GUTTER AND SIDEWALK IS PAID FOR UNDER CONCRETE CURB RAMP WHICH INCLUDES BUT IS NOT LIMITED TO: 7" HMA PLUG, SAWCUTTING, REMOVAL AND DISPOSAL OF MATERIAL, COMPACTION, SIGN & POST RELOCATION, FURNISHING AND INSTALLATION OF TRUNCATED DOMES.
2. FORM BOARDS SHALL BE INSPECTED BY THE ENGINEER 2 DAYS PRIOR TO PLACEMENT OF CONCRETE. THE CONTRACTOR SHALL NOTIFY THE PUBLIC WORKS DEPARTMENT 24 HOURS PRIOR TO CONSTRUCTION OF CURB RAMPS.
3. THE CONTRACTOR SHALL TRANSITION GUTTER PAN WIDTH (3' MAXIMUM) TO TIE INTO EXISTING GUTTER. ALL VALLEY GUTTERS SHALL BE SAWCUT AND DOWEL IN 6–INCHES TO EXISTING CONCRETE USING 12 INCH, #4 BARS AT 18" O.C CENTERED W/EPOXY.
4. THE CONTRACTOR SHALL MAINTAIN EXISTING GRADING PATTERNS AND ALSO MAINTAIN A MINIMUM GUTTER SLOPE OF 0.0015 FOR ALL FLOW LINES AT VALLEY GUTTERS AND CURB RETURNS.
5. CONTRACTOR SHALL BE REQUIRED TO CONDUCT A GUTTER FLOW TEST TO ENSURE PROPER DRAINAGE PATTERN.
6. CONTRACTOR SHALL RELOCATE EXISTING FIRE HYDRANT AS SHOWN ON THE PLANS. ALL WORK INCLUDED IN FIRE HYDRANT RELOCATION SHALL BE PAID FOR UNDER MISCELLANEOUS FACILITIES AND NO SEPARATE PAYMENT WILL BE MADE.
7. THE CONTRACTOR SHALL CONFORM TO ALL CURRENT ADA (AMERICANS WITH DISABILITIES ACT) LAWS AND REQUIREMENTS FOR NEW CONSTRUCTION.

CD–6

SCALE: 1" = 10'

0 5 10 15 20

PETERS ENGINEERING GROUP
952 POLLASKY AVENUE
CLOVIS, CALIFORNIA 93612
PHONE (559) 299-1544
WWW.PETERS-ENGINEERING.COM

CITY OF REEDLEY
PUBLIC WORKS DEPARTMENT
1733 9TH STREET
REEDLEY, CALIFORNIA 93654

	BY
DESIGN	PNG
DRAWN	PNG
CHECKED	DMP

ORIGINAL SCALE IN INCHES FOR REDUCED PLANS 0 1 2 3

REED AVENUE IMPROVEMENTS

CONSTRUCTION DETAILS CURB RAMPS

DISREGARD PRINTS BEARING EARLIER REVISION DATES →

REVISION DATES (PRELIMINARY STAGE ONLY)

DWG: S:\2014\14-013\Acad\Roundabout\Planset\14-013 CD-6.dwg USER: Phil Ginther DATE: Jun 03, 2016 11:09am

LEGEND (THIS SHEET)

1. CONSTRUCT CONCRETE CURB TRANSITION FROM 0 TO 6-INCHES OVER 2 FEET. SEE DETAIL THIS SHEET
2. THE CONTRACTOR SHALL FURNISH AND INSTALL A NEENAH R-3305 COMBINATION INLET OR EQUAL WITH CONCRETE INLET BOX PER DETAIL ON THIS SHEET. CONNECT 16-INCH HDPE PIPE TO INLET AND NEW STORM DRAIN IN THE STREET. THE CONTRACTOR SHALL SUBMIT THE COMBINATION INLET TO BE APPROVED BY the ENGINEER.

REGISTERED CIVIL ENGINEER

MAY 31, 2016

DATE

REGISTERED PROFESSIONAL ENGINEER DAVID M. PETERS No. 52685 EXP: 12/31/16 CIVIL STATE OF CALIFORNIA

SHEET NO.	TOTAL SHEETS
20	52

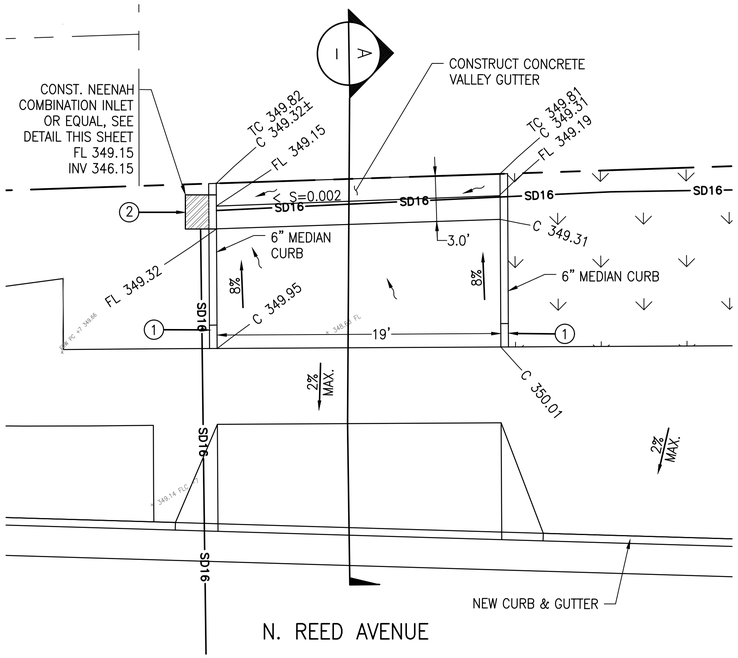

DRIVE APPROACH DETAIL 1

1" = 5'

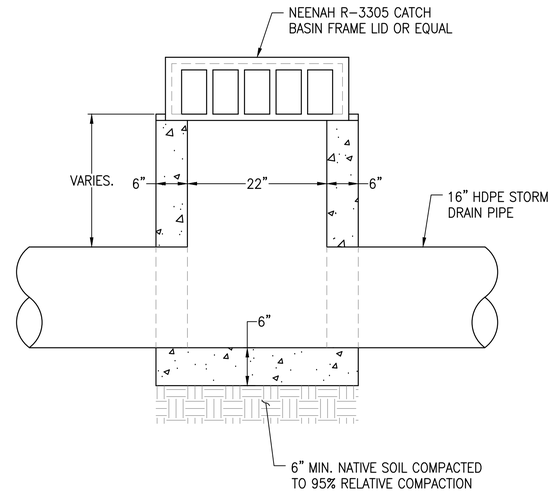

COMBINATION INLET & BOX DETAIL

NTS

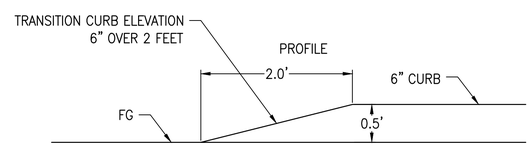

CONCRETE CURB TRANSITION DETAIL

NTS

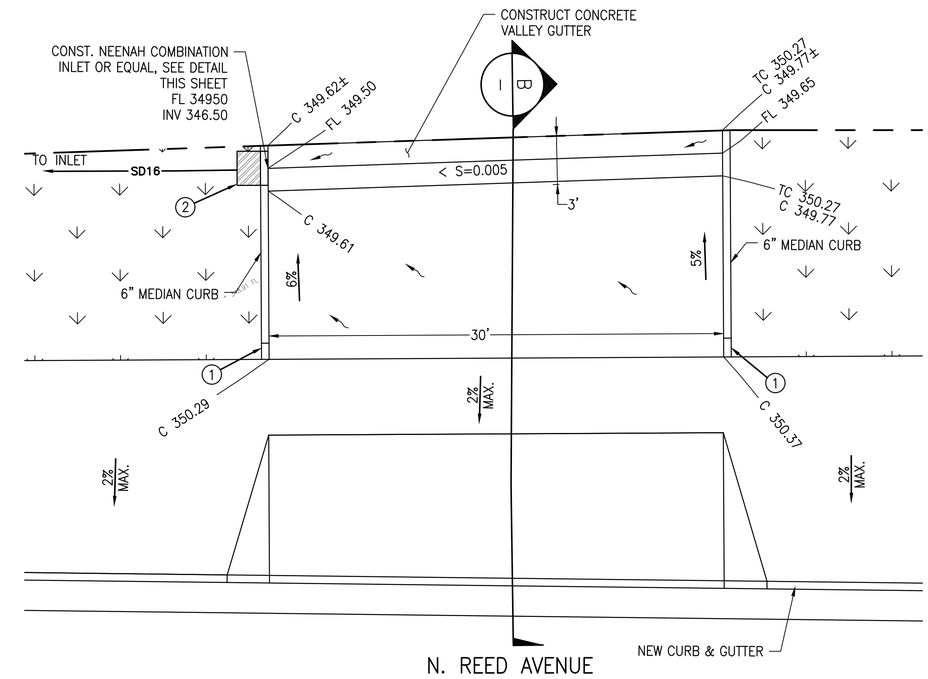

DRIVE APPROACH DETAIL 2

1" = 5'

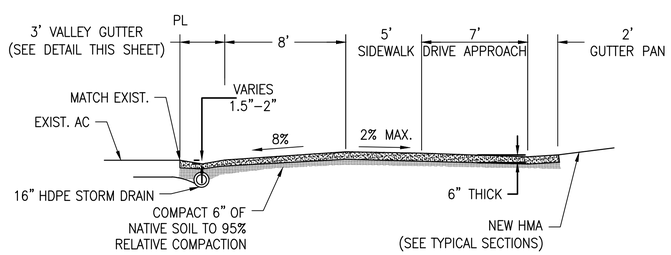

SECTION A-A

NTS

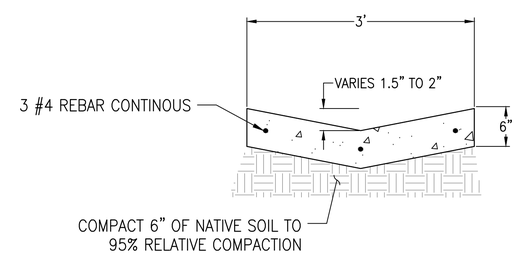

DRIVEWAY CONC. VALLEY GUTTER DETAIL

NTS

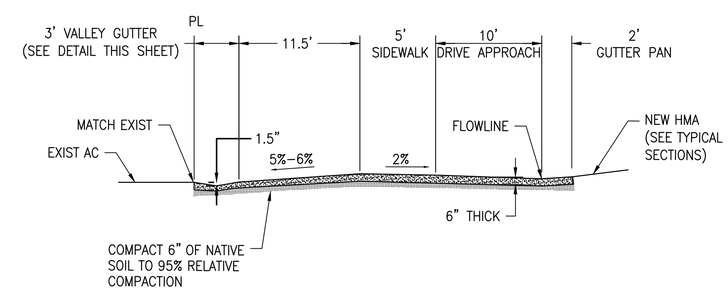

SECTION B-B

NTS

CD-7

PETERS ENGINEERING GROUP
952 POLLASKY AVENUE
CLOVIS, CALIFORNIA 93612
PHONE (559) 299-1544
WWW.PETERS-ENGINEERING.COM

CITY OF REEDLEY
PUBLIC WORKS DEPARTMENT
1733 9TH STREET
REEDLEY, CALIFORNIA 93654

	BY
DESIGN	PNG
DRAWN	PNG
CHECKED	DMP

ORIGINAL SCALE IN INCHES FOR REDUCED PLANS 0 1 2 3

REED AVENUE IMPROVEMENTS

CONSTRUCTION DETAILS

DISREGARD PRINTS BEARING EARLIER REVISION DATES

REVISION DATES (PRELIMINARY STAGE ONLY)

DWG: S:\2014\14-013\Acad\Roundabout\Planset\14-013 CD-6.dwg USER: Phil Gither DATE: Jun 03, 2016 11:10am

SHEET NO.	TOTAL SHEETS
21	52

REGISTERED CIVIL ENGINEER

MAY 31, 2016

DATE

REGISTERED PROFESSIONAL ENGINEER
DAVID M. PETERS
No. 52685
EXP: 12/31/16
CIVIL
STATE OF CALIFORNIA

NOTE TO CONTRACTOR:
1. THE CURB ADJACENT TO THE MEDIAN ISLAND PASSAGE WAY IS 6" MEDIAN CURB. (8/–)

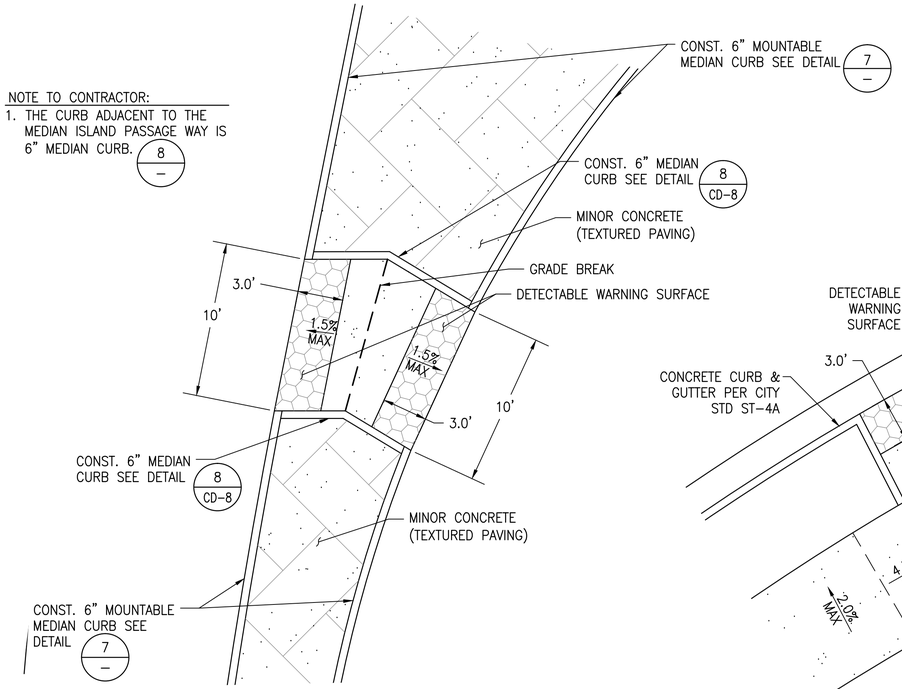

MEDIAN ISLAND PASSAGEWAY (5/–)
SCALE: 1" = 5'

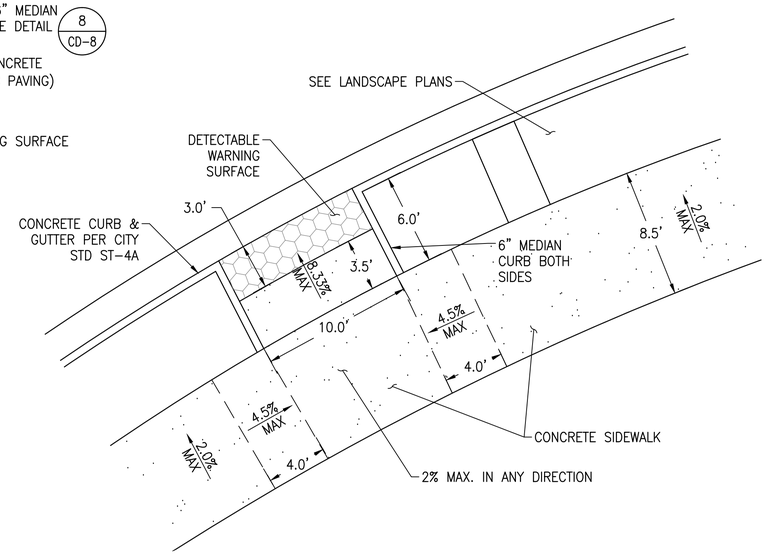

PEDESTRIAN RAMP (6/–)
SCALE: 1" = 5'

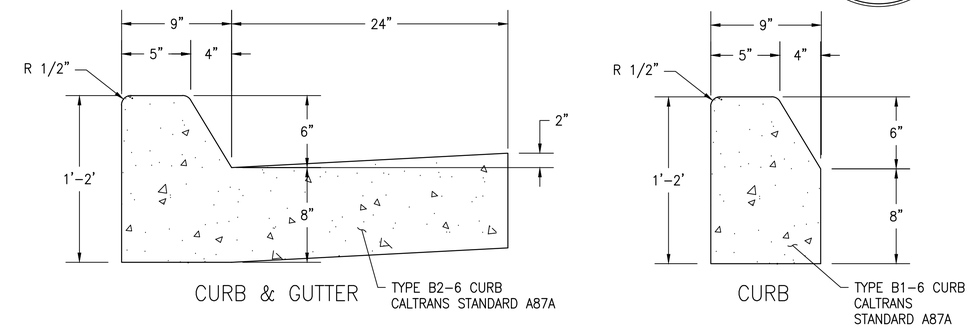

6" MOUNTABLE MEDIAN CURB/GUTTER (7/–)
NTS

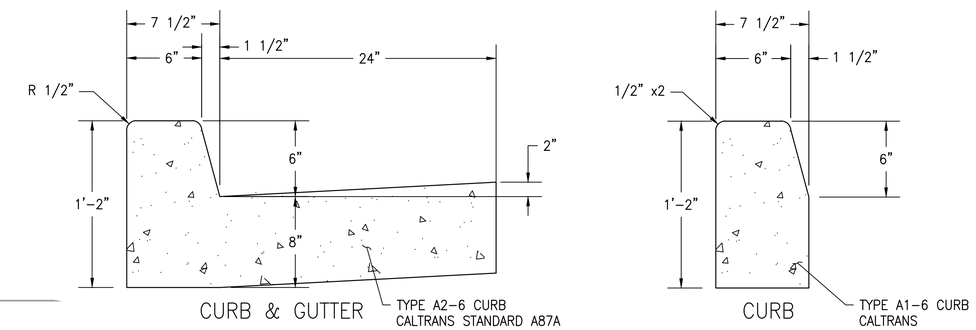

6" MEDIAN CURB/GUTTER (8/–)
NTS

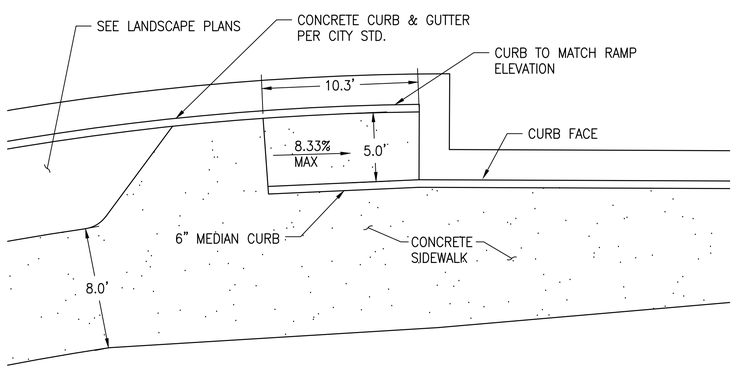

BIKE RAMP ENTRANCE & EXIT (9/–)
SCALE: 1" = 5'

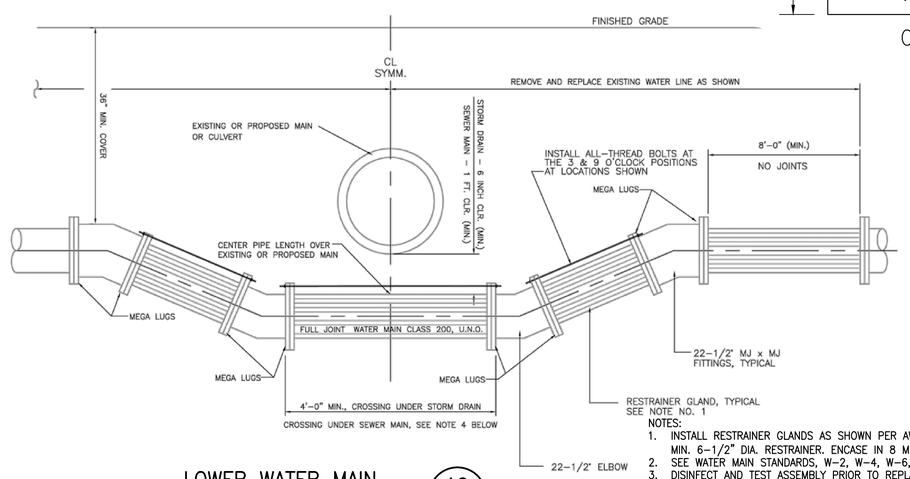

NOTES:
1. INSTALL RESTRAINER GLANDS AS SHOWN PER AWWA SPECIFICIATION C-600-87, MIN. 6-1/2" DIA. RESTRAINER. ENCASE IN 8 MIL.
2. SEE WATER MAIN STANDARDS, W-2, W-4, W-6, W-7 FOR DETAILS NOT SHOWN.
3. DISINFECT AND TEST ASSEMBLY PRIOR TO REPLACING TRENCH PAVING.
4. REFER TO W-6 & W-7 FOR SPECIAL CONSTRUCTION REQUIREMENTS FOR SEWER AND WATER SEPARATION.
5. LOWERING WATER MAINS REQUIRE APPROVAL BY THE CITY ENGINEER.
6. ALL FITTING SHALL BE PVC.

LOWER WATER MAIN (10/–)
NTS

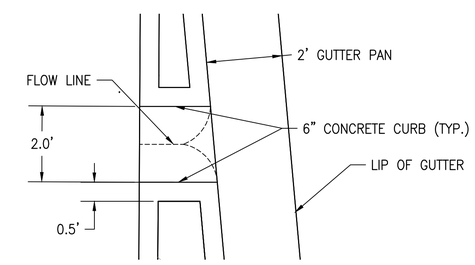

MEDIAN ISLAND BREAK (11/–)
SCALE: 1" = 2'

CD-8

PETERS ENGINEERING GROUP
952 POLLASKY AVENUE
CLOVIS, CALIFORNIA 93612
PHONE (559) 299-1544
WWW.PETERS-ENGINEERING.COM

CITY OF REEDLEY
PUBLIC WORKS DEPARTMENT
1733 9TH STREET
REEDLEY, CALIFORNIA 93654

	BY
DESIGN	PNG
DRAWN	PNG
CHECKED	DMP

REED AVENUE IMPROVEMENTS
CONSTRUCTION DETAILS

ORIGINAL SCALE IN INCHES FOR REDUCED PLANS 0 1 2 3

DISREGARD PRINTS BEARING EARLIER REVISION DATES →

REVISION DATES (PRELIMINARY STAGE ONLY)

DWG: S:\2014\14-013\Acad\Roundabout\Planset\14-013 CD-8.dwg USER: Phil Gither DATE: Jun 03, 2016 11:11am

REGISTERED CIVIL ENGINEER

MAY 31, 2016

DATE

REGISTERED PROFESSIONAL ENGINEER
DAVID M. PETERS
No. 52685
EXP: 12/31/16
CIVIL
STATE OF CALIFORNIA

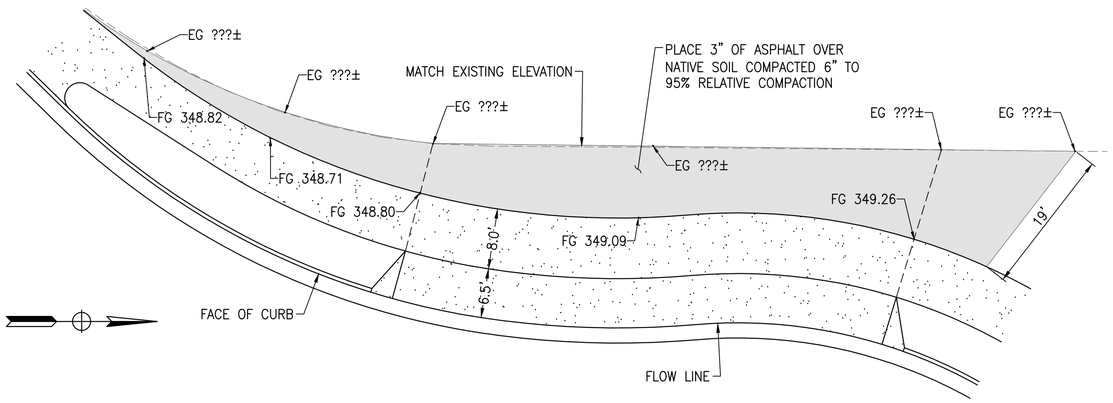

DRIVE APPROACH DETAIL 3 (12/—)

SCALE: 1" = 10'

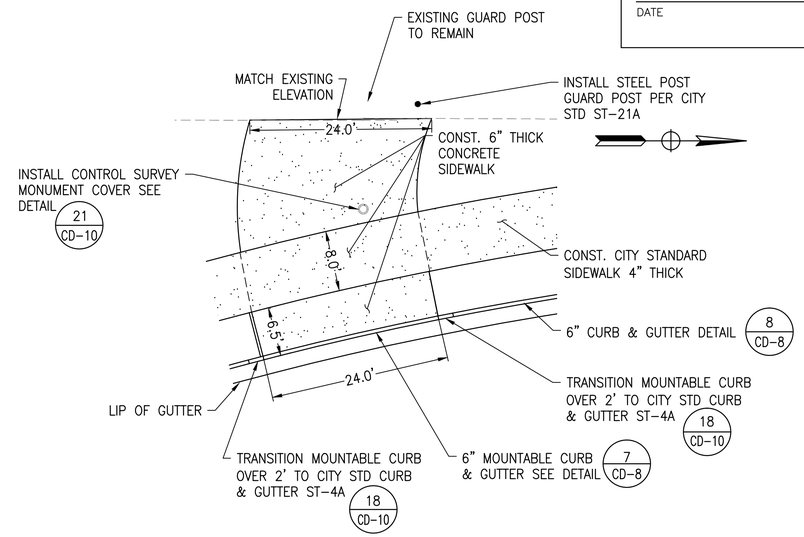

EMERGENCY ACCESS DETAIL (14/—)

SCALE: 1" = 10'

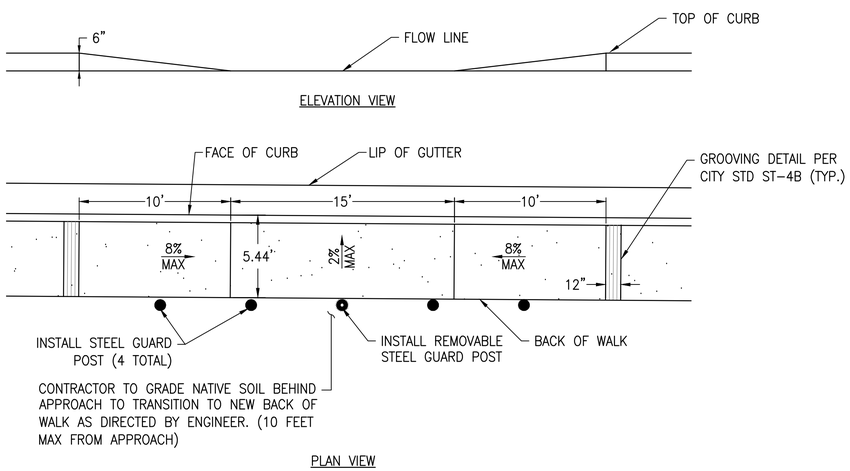

DRIVE APPROACH DETAIL 4 (13/—)

SCALE: 1" = 5'

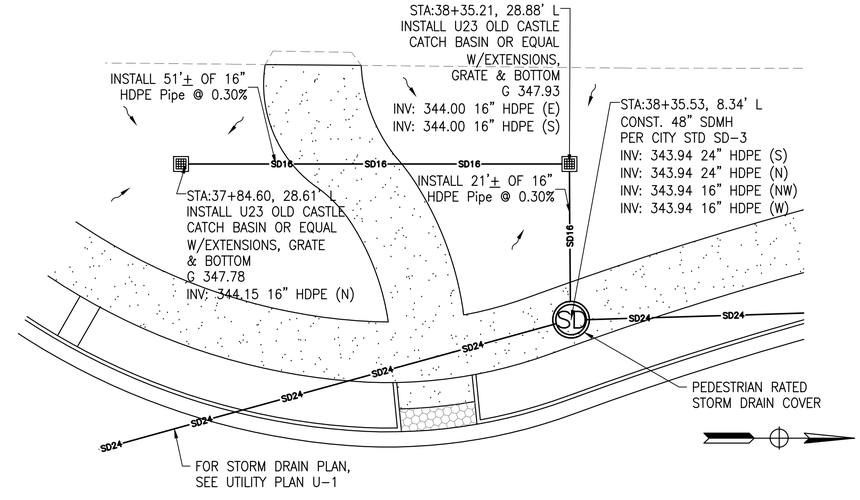

LANDSCAPE DRAIN DETAIL (15/—)

SCALE: 1" = 10'

CD-9

PETERS ENGINEERING GROUP
952 POLLASKY AVENUE
CLOVIS, CALIFORNIA 93612
PHONE (559) 299-1544
WWW.PETERS-ENGINEERING.COM

CITY OF REEDLEY
PUBLIC WORKS DEPARTMENT
1733 9TH STREET
REEDLEY, CALIFORNIA 93654

	BY
DESIGN	PNG
DRAWN	PNG
CHECKED	DMP

REED AVENUE IMPROVEMENTS

CONSTRUCTION DETAILS

ORIGINAL SCALE IN INCHES FOR REDUCED PLANS 0 1 2 3

DISREGARD PRINTS BEARING EARLIER REVISION DATES

REVISION DATES (PRELIMINARY STAGE ONLY)

DWG: S:\2014\14-013\Acad\Roundabout\Plotset\14-013 CD-8.dwg USER: Phil Gither DATE: Jun 03, 2016 11:11am

REGISTERED CIVIL ENGINEER

MAY 31, 2016

DATE

REGISTERED PROFESSIONAL ENGINEER DAVID M. PETERS No. 52685 EXP: 12/31/16 CIVIL STATE OF CALIFORNIA

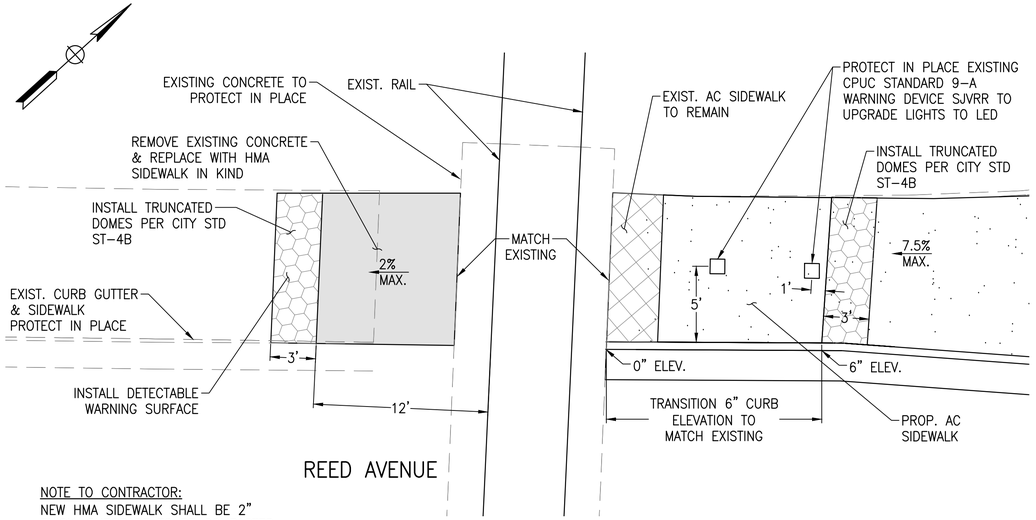

NOTE TO CONTRACTOR:
NEW HMA SIDEWALK SHALL BE 2" THICK. SUBGRADE TO BE COMPACTED TO 95% RELATIVE COMPACTION

WEST ADJACENT RAILROAD SIDEWALK (16 / –)
NTS

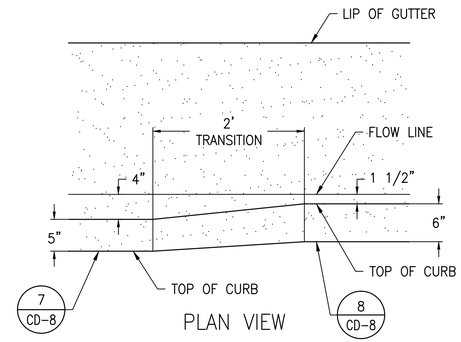

MOUNTABLE CURB TRANSITION (18 / –)
NTS

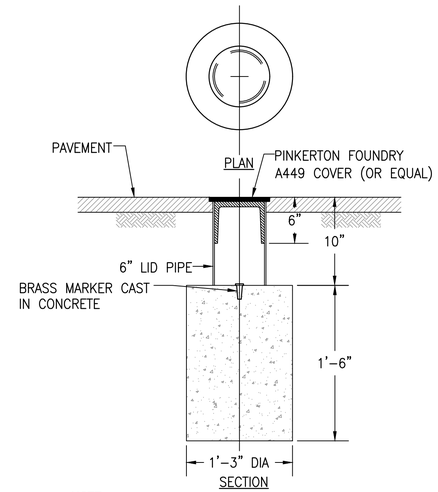

NOTE:
1. CONTROL SURVEY MONUMENT SHALL BE LOCATED AT ALL SECTION CORNERS.

CONTROL SURVEY MONUMENT (21 / –)
NTS

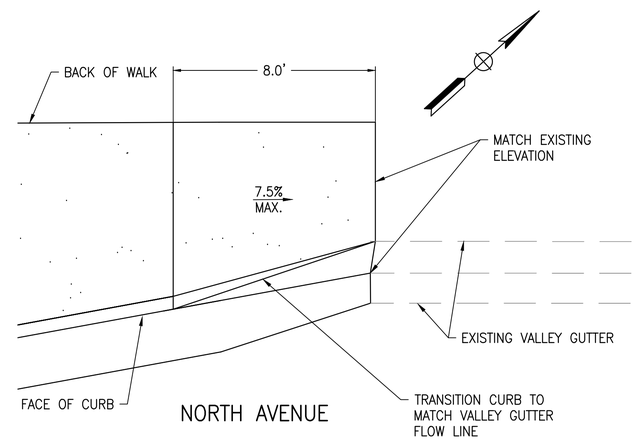

SIDEWALK RAMP TRANSITION (19 / –)
NTS

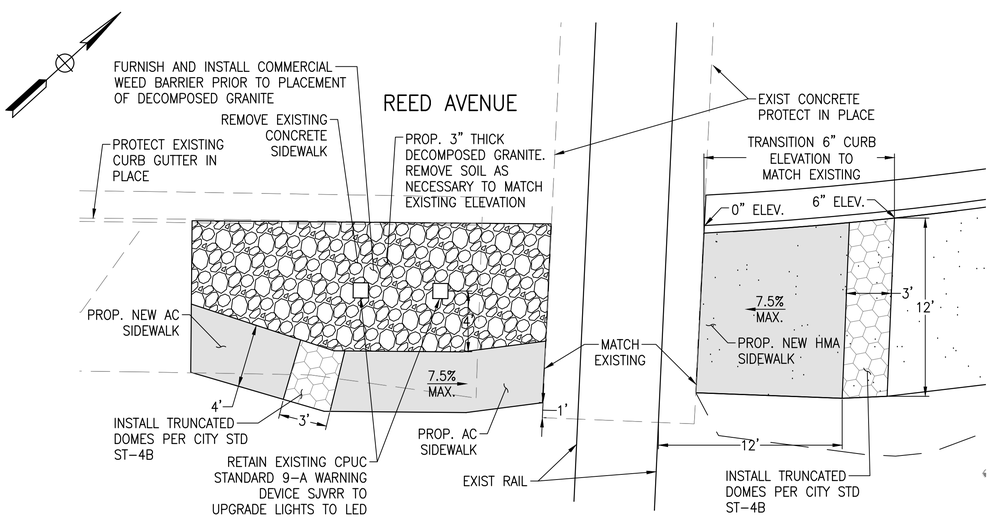

NOTE TO CONTRACTOR:
NEW HMA SIDEWALK SHALL BE 2" THICK. SUBGRADE TO BE COMPACTED TO 95% RELATIVE COMPACTION

EAST ADJACENT RAILROAD SIDEWALK (17 / –)
NTS

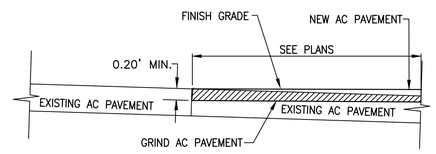

AC COLD PLANE TAPER (20 / –)
NTS

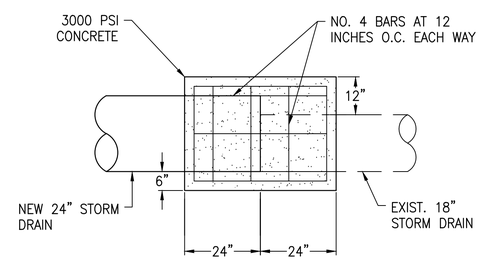

NOTE: MATCH FLOW LINES FOR NEW AND EXISTING STORM DRAIN

FIELD COLLAR (22 / –)
NTS

CD-10

PETERS ENGINEERING GROUP
952 POLLASKY AVENUE
CLOVIS, CALIFORNIA 93612
PHONE (559) 299-1544
WWW.PETERS-ENGINEERING.COM

CITY OF REEDLEY
PUBLIC WORKS DEPARTMENT
1733 9TH STREET
REEDLEY, CALIFORNIA 93654

	BY
DESIGN	PNG
DRAWN	PNG
CHECKED	DMP

REED AVENUE IMPROVEMENTS
CONSTRUCTION DETAILS

ORIGINAL SCALE IN INCHES FOR REDUCED PLANS 0 1 2 3

DISREGARD PRINTS BEARING EARLIER REVISION DATES

REVISION DATES (PRELIMINARY STAGE ONLY)

DWG: S:\2014\14-013\Acad\Roundabout\Planset\14-013 CD-8.dwg USER: Phil Ginther DATE: Jun 03, 2016 11:11am

SHEET NO.	TOTAL SHEETS
24	52

REGISTERED CIVIL ENGINEER

MAY 31, 2016

DATE

REGISTERED PROFESSIONAL ENGINEER
DAVID M. PETERS
No. 52685
EXP: 12/31/16
CIVIL
STATE OF CALIFORNIA

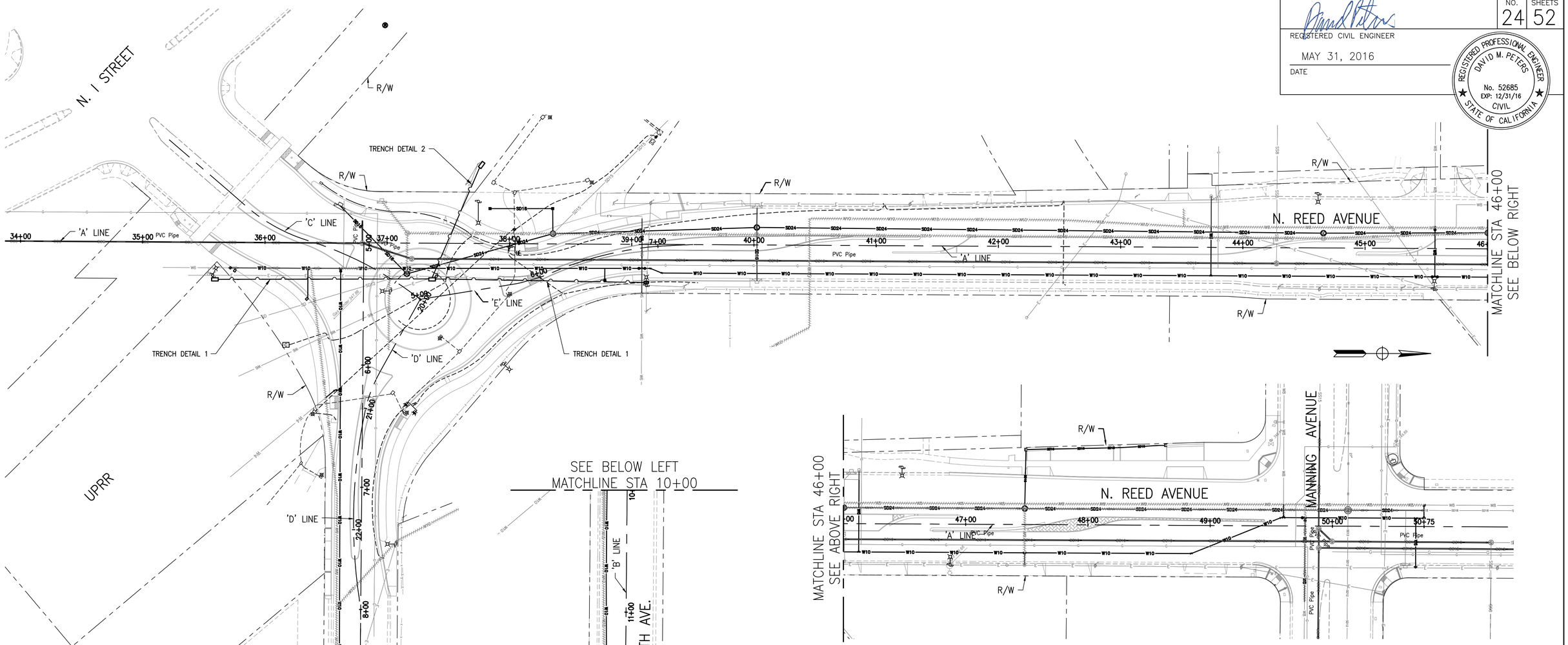

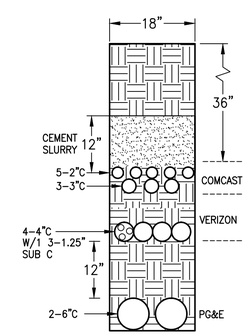

TRENCH DETAIL 1

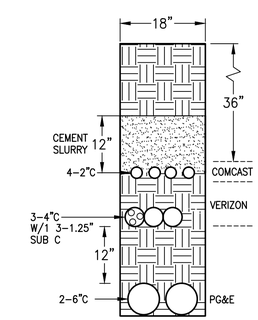

TRENCH DETAIL 2

LEGEND

- COMMON TRENCH TERMINATION LOCATION
- UNDERGROUND ELECTRICAL (JOINT TRENCH)
- W10 — NEW WATER MAIN
- SD24 — NEW STORM DRAIN
- SS12 — NEW SEWER MAIN
- NEW ELECTRICAL CONDUIT
- C — EXISTING GAS LINE
- W10 — EXISTING WATER MAIN
- SD24 — EXISTING STORM DRAIN
- SS12 — EXISTING SEWER MAIN
- E — EXISTING ELECTRICAL LINE

U-1

SCALE: 1" = 40'

0 20 40 60 80

PETERS ENGINEERING GROUP
952 POLLASKY AVENUE
CLOVIS, CALIFORNIA 93612
PHONE (559) 299-1544
WWW.PETERS-ENGINEERING.COM

CITY OF REEDLEY
PUBLIC WORKS DEPARTMENT
1733 9TH STREET
REEDLEY, CALIFORNIA 93654

	BY
DESIGN	PNG
DRAWN	PNG
CHECKED	DMP

REED AVENUE IMPROVEMENTS

UTILITY LAYOUT PLAN

ORIGINAL SCALE IN INCHES FOR REDUCED PLANS 0 1 2 3

DISREGARD PRINTS BEARING EARLIER REVISION DATES

REVISION DATES (PRELIMINARY STAGE ONLY)

DWG: S:\2014\14-013\Acad\Roundabout\Planset\14-013 U-1.dwg USER: Phil Ginther DATE: Jun 03, 2016 11:12am

NOTE TO CONTRACTOR:
1. EXISTING WATER & STORM DRAIN UTILITIES IN CONFLICT WITH NEW UTILITY IMPROVEMENTS SHALL BE REMOVED & DISPOSED OF BY THE CONTRACTOR AS DIRECTED BY THE ENGINEER.
2. FOR ELECTRICAL UTILITIES, SEE SHEETS E-1 THROUGH E-5.
3. JOINT UTILITY TRENCH SHOWN ON SHEET U-1.

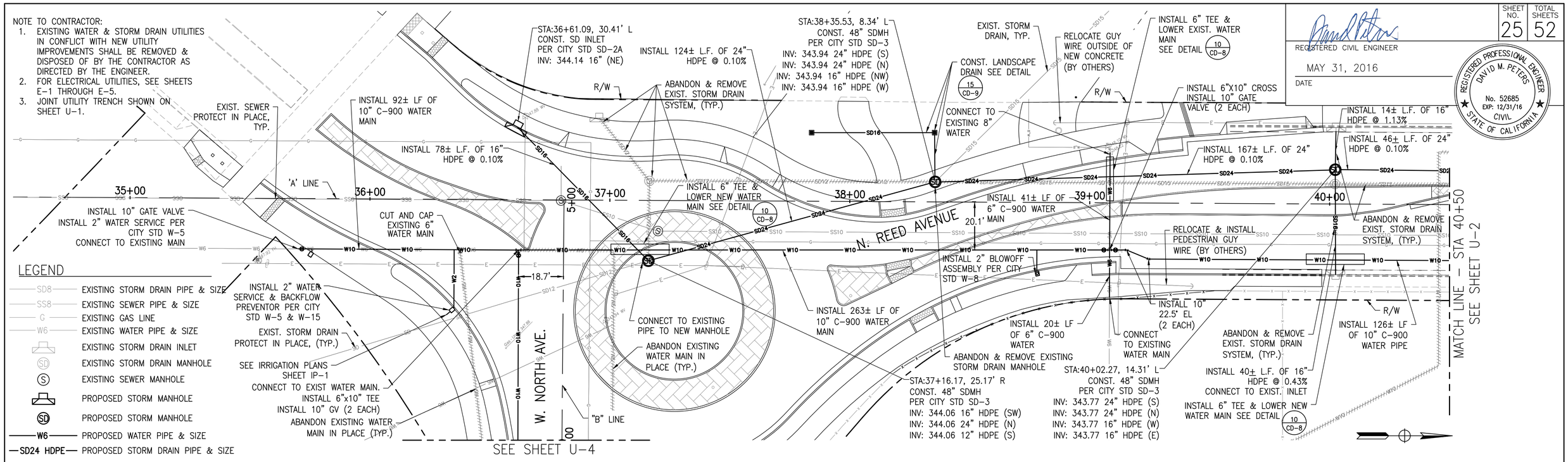

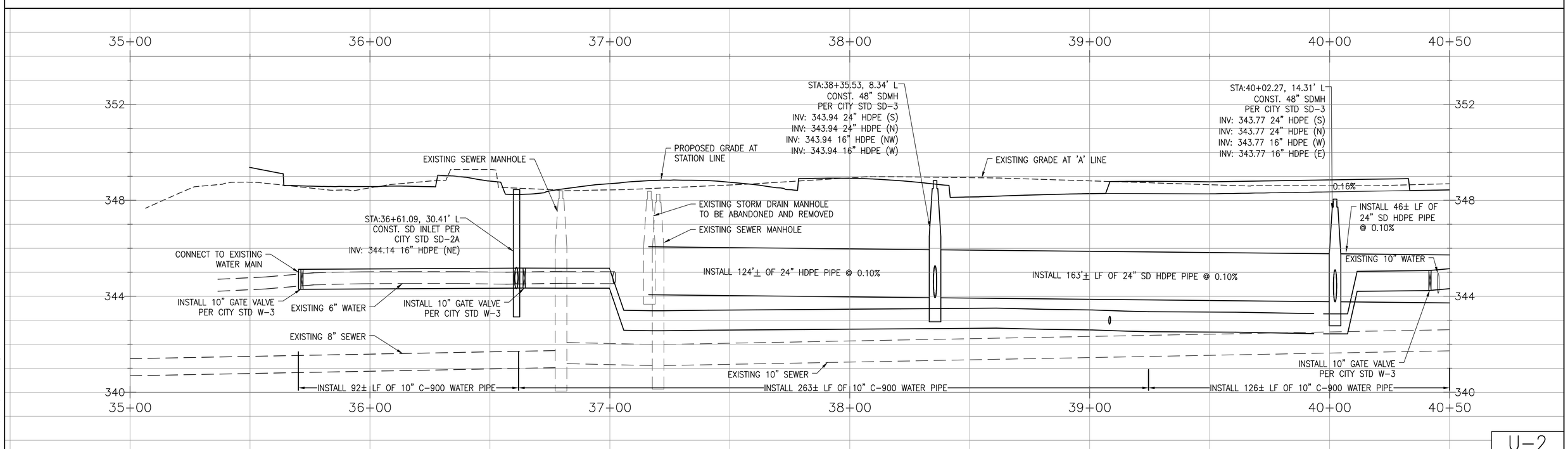

U-2

HORIZ. SCALE: 1" = 20'
VERT. SCALE: 1" = 2'
0 10 20 30 40

PETERS ENGINEERING GROUP
952 POLLASKY AVENUE
CLOVIS, CALIFORNIA 93612
PHONE (559) 299-1544
WWW.PETERS-ENGINEERING.COM

CITY OF REEDLEY
PUBLIC WORKS DEPARTMENT
1733 9TH STREET
REEDLEY, CALIFORNIA 93654

	BY
DESIGN	PNG
DRAWN	PNG
CHECKED	DMP

REED AVENUE IMPROVEMENTS

UTILITY PLANS REED AVE. - STA 35+00 TO STA 40+50

ORIGINAL SCALE IN INCHES FOR REDUCED PLANS 0 1 2 3

DISREGARD PRINTS BEARING EARLIER REVISION DATES

REVISION DATES (PRELIMINARY STAGE ONLY)

REGISTERED CIVIL ENGINEER
MAY 31, 2016
DATE

REGISTERED PROFESSIONAL ENGINEER DAVID M. PETERS No. 52685 EXP: 12/31/16 CIVIL STATE OF CALIFORNIA

SHEET NO. 25 TOTAL SHEETS 52

DWG: S:\2014\14-013\Acad\Roundabout\Planset\14-013 U-2.dwg USER: Phil Ginther DATE: Jun 03, 2016 11:13am

SHEET NO.	TOTAL SHEETS
26	52

REGISTERED CIVIL ENGINEER

MAY 31, 2016

DATE

REGISTERED PROFESSIONAL ENGINEER
DAVID M. PETERS
No. 52685
EXP: 12/31/16
CIVIL
STATE OF CALIFORNIA

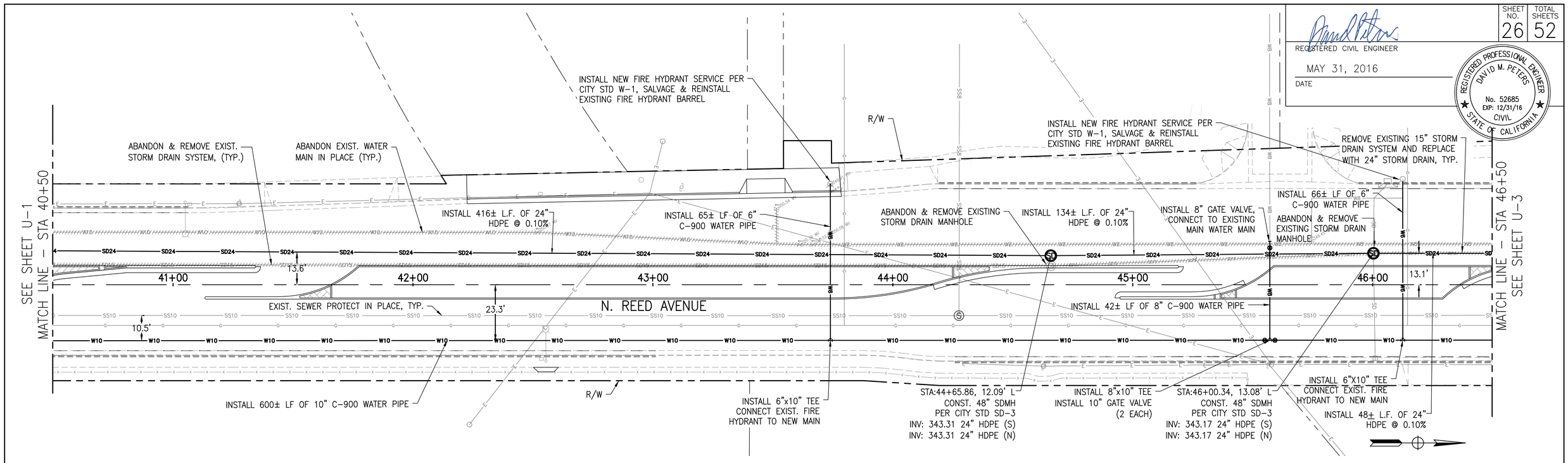

U-3

HORIZ. SCALE: 1" = 20'
VERT. SCALE: 1" = 2'
0 10 20 30 40

PETERS ENGINEERING GROUP
952 POLLASKY AVENUE
CLOVIS, CALIFORNIA 93612
PHONE (559) 299-1544
WWW.PETERS-ENGINEERING.COM

CITY OF REEDLEY
PUBLIC WORKS DEPARTMENT
1733 9TH STREET
REEDLEY, CALIFORNIA 93654

	BY
DESIGN	PNG
DRAWN	PNG
CHECKED	DMP

REED AVENUE IMPROVEMENTS

UTILITY PLANS REED AVE.- STA 40+50 TO STA 46+50

ORIGINAL SCALE IN INCHES FOR REDUCED PLANS 0 1 2 3

DISREGARD PRINTS BEARING EARLIER REVISION DATES

REVISION DATES (PRELIMINARY STAGE ONLY)

DWG: S:\2014\14-013\Acad\Roundabout\Planset\14-013 U-2.dwg USER: Phil Ginther DATE: Jun 03, 2016 11:13am

SHEET NO.	TOTAL SHEETS
27	52

REGISTERED CIVIL ENGINEER

MAY 31, 2016

DATE

REGISTERED PROFESSIONAL ENGINEER
DAVID M. PETERS
No. 52685
EXP: 12/31/16
CIVIL
STATE OF CALIFORNIA

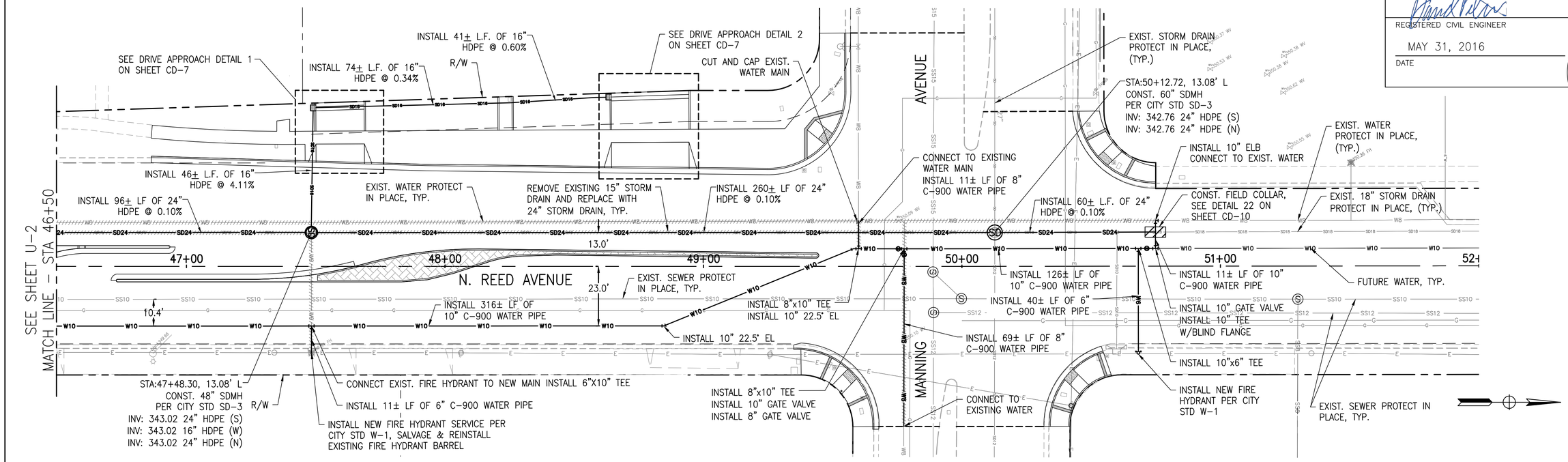

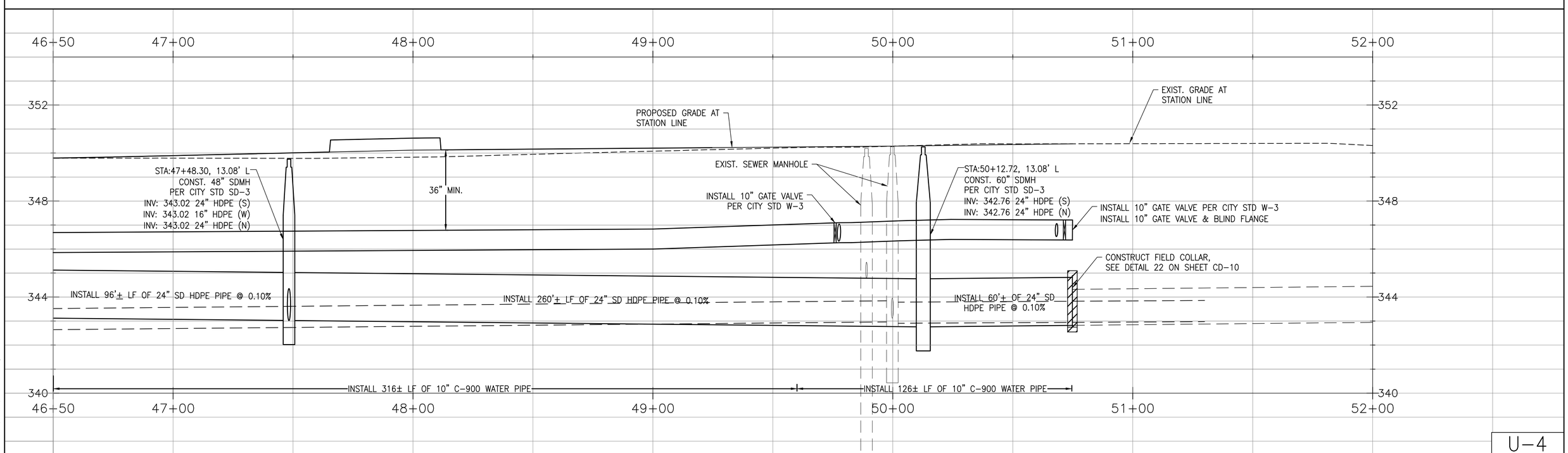

U-4

HORIZ. SCALE: 1" = 20'
VERT. SCALE: 1" = 2'
0 10 20 30 40

PETERS ENGINEERING GROUP
952 POLLASKY AVENUE
CLOVIS, CALIFORNIA 93612
PHONE (559) 299-1544
WWW.PETERS-ENGINEERING.COM

CITY OF REEDLEY
PUBLIC WORKS DEPARTMENT
1733 9TH STREET
REEDLEY, CALIFORNIA 93654

	BY
DESIGN	PNG
DRAWN	PNG
CHECKED	DMP

REED AVENUE IMPROVEMENTS

UTILITY PLANS REED AVE.– STA 46+50 TO STA 52+00

ORIGINAL SCALE IN INCHES FOR REDUCED PLANS 0 1 2 3

DISREGARD PRINTS BEARING EARLIER REVISION DATES

REVISION DATES (PRELIMINARY STAGE ONLY)

DWG: S:\2014\14-013\Acad\Roundabout\Planset\14-013 U-2.dwg USER: Phil Gether DATE: Jun 03, 2016 11:13am

SHEET NO.	TOTAL SHEETS
28	52

REGISTERED CIVIL ENGINEER

MAY 31, 2016

DATE

REGISTERED PROFESSIONAL ENGINEER
DAVID M. PETERS
No. 52685
EXP: 12/31/16
CIVIL
STATE OF CALIFORNIA

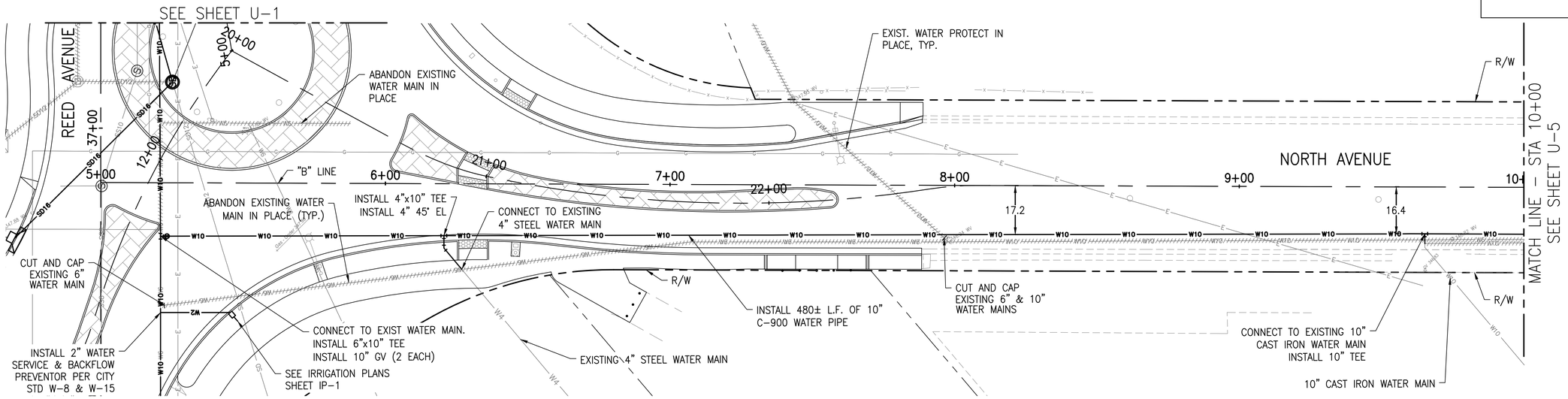

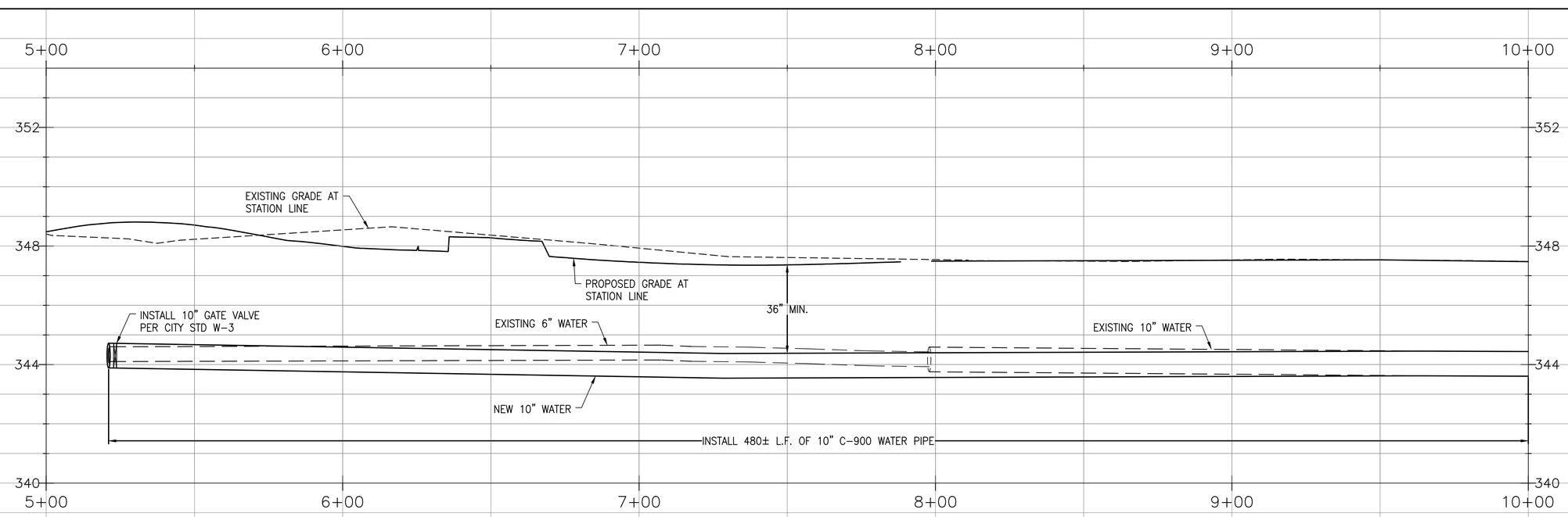

U-5

HORIZ. SCALE: 1" = 20'
VERT. SCALE: 1" = 2'
0 10 20 30 40

PETERS ENGINEERING GROUP
952 POLLASKY AVENUE
CLOVIS, CALIFORNIA 93612
PHONE (559) 299-1544
WWW.PETERS-ENGINEERING.COM

CITY OF REEDLEY
PUBLIC WORKS DEPARTMENT
1733 9TH STREET
REEDLEY, CALIFORNIA 93654

	BY
DESIGN	PNG
DRAWN	PNG
CHECKED	DMP

REED AVENUE IMPROVEMENTS

UTILITY PLANS NORTH AVE.- STA 5+00 TO STA 10+00

ORIGINAL SCALE IN INCHES FOR REDUCED PLANS 0 1 2 3

DISREGARD PRINTS BEARING EARLIER REVISION DATES

REVISION DATES (PRELIMINARY STAGE ONLY)

DWG: S:\2014\14-013\Acad\Roundabout\Planset\14-013 U-4.dwg USER: Phil Ginther DATE: Jun 03, 2016 11:13am

SHEET NO.	TOTAL SHEETS
29	52

REGISTERED CIVIL ENGINEER

MAY 31, 2016

DATE

REGISTERED PROFESSIONAL ENGINEER
DAVID M. PETERS
No. 52685
EXP: 12/31/16
CIVIL
STATE OF CALIFORNIA

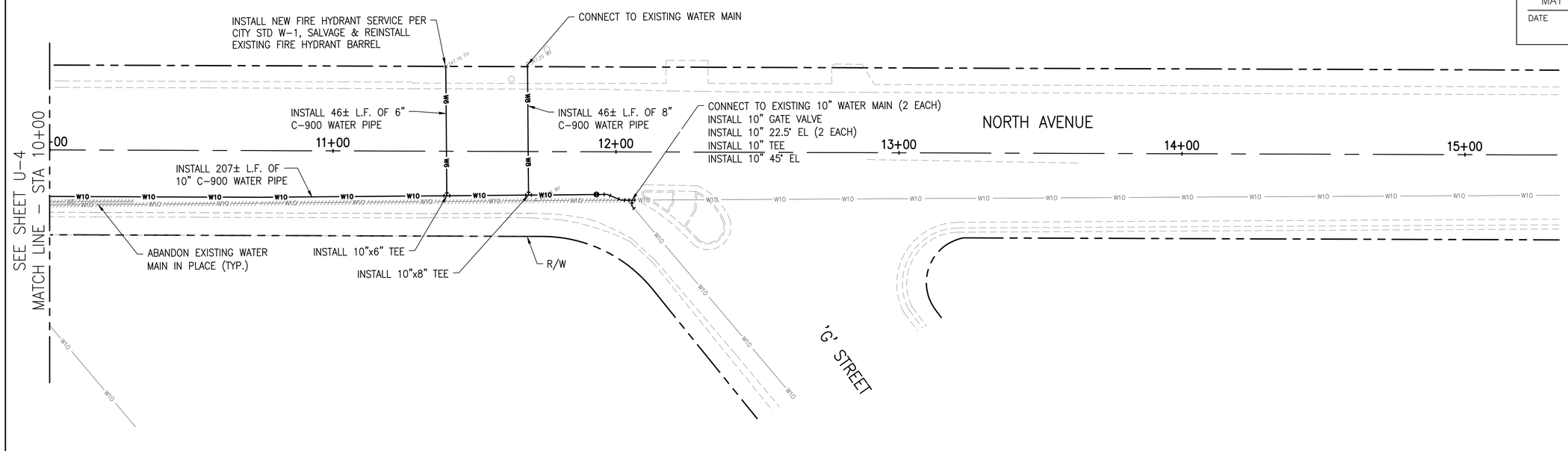

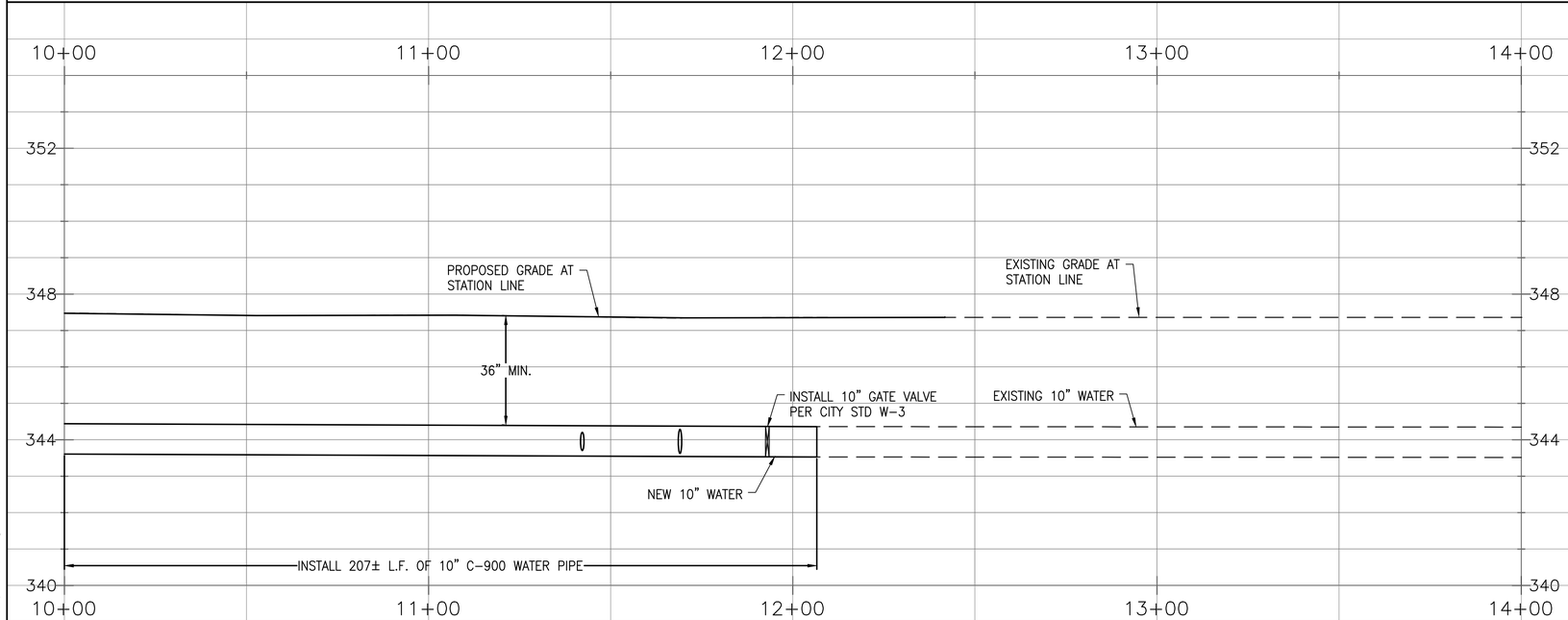

U-6

HORIZ. SCALE: 1" = 20'
VERT. SCALE: 1" = 2'

0 10 20 30 40

PETERS ENGINEERING GROUP
952 POLLASKY AVENUE
CLOVIS, CALIFORNIA 93612
PHONE (559) 299-1544
WWW.PETERS-ENGINEERING.COM

CITY OF REEDLEY
PUBLIC WORKS DEPARTMENT
1733 9TH STREET
REEDLEY, CALIFORNIA 93654

	BY
DESIGN	PNG
DRAWN	PNG
CHECKED	DMP

ORIGINAL SCALE IN INCHES FOR REDUCED PLANS 0 1 2 3

REED AVENUE IMPROVEMENTS

UTILITY PLANS NORTH AVE.- STA 10+00 TO STA 14+00

DISREGARD PRINTS BEARING EARLIER REVISION DATES

REVISION DATES (PRELIMINARY STAGE ONLY)

DWG: S:\2014\14-013\Acad\Roundabout\Planset\14-013 U-4.dwg USER: Phil Ginther DATE: Jun 03, 2016 11:13am

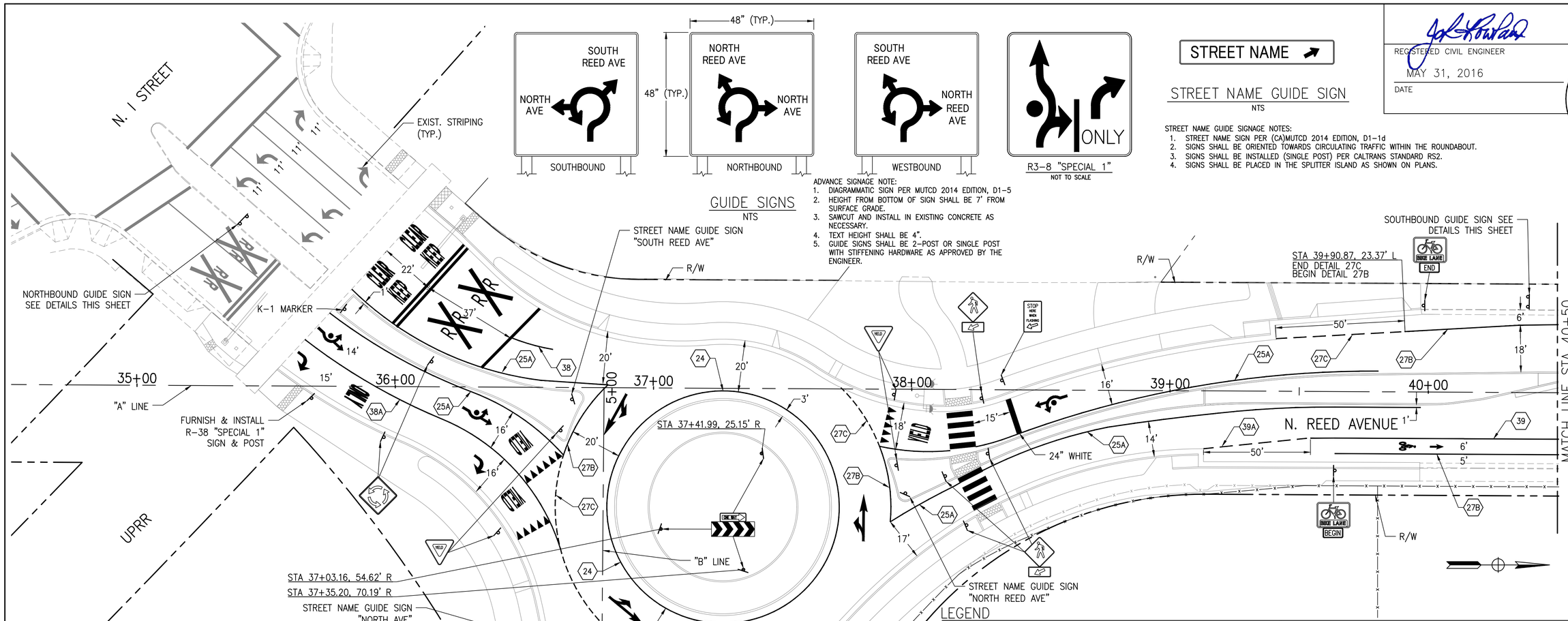

R3-8 "SPECIAL 1"
NOT TO SCALE

GUIDE SIGNS
NTS

ADVANCE SIGNAGE NOTE:
1. DIAGRAMMATIC SIGN PER MUTCD 2014 EDITION, D1-5
2. HEIGHT FROM BOTTOM OF SIGN SHALL BE 7' FROM SURFACE GRADE.
3. SAWCUT AND INSTALL IN EXISTING CONCRETE AS NECESSARY.
4. TEXT HEIGHT SHALL BE 4".
5. GUIDE SIGNS SHALL BE 2-POST OR SINGLE POST WITH STIFFENING HARDWARE AS APPROVED BY THE ENGINEER.

STREET NAME ↗

STREET NAME GUIDE SIGN
NTS

STREET NAME GUIDE SIGNAGE NOTES:
1. STREET NAME SIGN PER (CA)MUTCD 2014 EDITION, D1-1d
2. SIGNS SHALL BE ORIENTED TOWARDS CIRCULATING TRAFFIC WITHIN THE ROUNDABOUT.
3. SIGNS SHALL BE INSTALLED (SINGLE POST) PER CALTRANS STANDARD RS2.
4. SIGNS SHALL BE PLACED IN THE SPLITTER ISLAND AS SHOWN ON PLANS.

REGISTERED CIVIL ENGINEER
MAY 31, 2016
DATE

REGISTERED PROFESSIONAL ENGINEER JOHN ROWLAND NO. C52753 EXP. 12-31-16 CIVIL STATE OF CALIFORNIA

SHEET NO.	TOTAL SHEETS
30	52

UTILITIES:
1. THE CONTRACTOR SHALL NOTIFY THE AGENCIES HAVING JURISDICTION AT LEAST 48 HOURS PRIOR TO PERFORMING ANY POTHOLING OR OTHER FIELD INVESTIGATION WORK.
2. UNLESS DIRECTED OTHERWISE BY THE OWNER/CITY, THE CONTRACTOR SHALL MAINTAIN AS-BUILT DRAWINGS, INCLUDING ALL FIELD INVESTIGATION AND POTHOLED INFORMATION.

TYPICAL NOTES

1. ALL STRIPING WORK SHALL BE DONE IN ACCORDANCE WITH THE 2010 EDITIONS OF THE STATE OF CALIFORNIA DEPARTMENT OF TRANSPORTATION STANDARD PLANS AND SPECIFICATIONS AND THE CALIFORNIA MANUAL ON UNIFORM TRAFFIC CONTROL DEVICES (2014 CALIFORNIA MUTCD), UNLESS OTHERWISE DIRECTED BY THE CITY ENGINEER.
2. ALL PAVEMENT MARKINGS, CROSSWALKS, AND LIMIT LINES SHALL BE THERMOPLASTIC. ALL TRAFFIC STRIPES SHALL BE PAINT (2 COATS) UNLESS OTHERWISE DIRECTED BY THE CITY ENGINEER.
3. FOR FISH-HOOK MARKING LAYOUTS, SEE SHEET PD-3.
4. THESE PLANS ARE ACCURATE FOR SIGNING AND STRIPING ONLY.
5. ALL SIGNS SHALL BE AVERY DENNISON T6500 SERIES REFLECTIVE SHEETING AND SHALL BE COVERED WITH AVERY DENNISON OL1000 ANTI-GRAFFITI OVERLAY FILM.
6. ALL SALVAGED MATERIALS SHALL BE DELIVERED TO THE CITY CORPORATION YARD. THE CONTRACTOR SHALL NOTIFY THE CITY AT LEAST 2 WORKING DAYS PRIOR TO DELIVERY.
7. EXISTING STRIPING TO BE REMOVED SHALL BE DONE BY SANDBLASTING OR GRINDING.
8. ALL CROSSWALKS SHALL BE 10 FEET WIDE.
9. THE CONTRACTOR SHALL FURNISH AND INSTALL NEW OM2-2H MARKERS ON ALL MEDIAN ISLAND NOSES, UNLESS OTHERWISE NOTED ON THE PLANS.
10. ALL FLASHING BEACONS SHALL BE INSTALLED COMPLETE AND OPERATIONAL PER APPLICABLE CALTRANS STANDARDS SPECIFICATIONS AND DRAWINGS.
11. CONTRACTOR SHALL COMPLY WITH CURRENT CalDAG (DISABLED ACCESSIBLE GUIDEBOOK) RECOMMENDATIONS DURING CONSTRUCTION OF THIS PROJECT.
12. CONSTRUCTION SEQUENCING FOR ALL ROAD/ASPHALT CONSTRUCTION SHALL BE: 1. HMA PAVEMENT CONSTRUCTION. 2. FOG SEAL. 3. STRIPING.

LEGEND

- STRIPING DETAIL PER STATE OF CALIFORNIA DEPARTMENT OF TRANSPORTATION STANDARD PLANS DATED MAY 2010
- INSTALL SIGN AS DESIGNATED ON PLANS UNLESS DIRECTED OTHERWISE
- INSTALL TWO POST SIGN 5' HIGH PER CALTRANS STD RS2 (GUIDE SIGNS)
- INSTALL R4-7
- INSTALL W11-2 "PEDESTRIAN CROSSING SYMBOL" WITH W16-7P SIGN BELOW SHOWING LOCATION OF CROSSING
- INSTALL R1-2 "YIELD" SIGN DIRECTED TOWARD TRAFFIC APPROACHING THE ROUNDABOUT
- INSTALL W2-6 "CIRCULAR INTERSECTION"
- INSTALL R3-17 "BIKE LANE" & M4-12 "END"
- INSTALL R3-17 "BIKE LANE" & M4-11 "BEGIN"
- INSTALL W4-2 "LANE ENDS MERGE LEFT"
- INSTALL W9-1 "LANE ENDS MERGE LEFT"
- INSTALL R3-7R "RIGHT LANE MUST TURN RIGHT"
- INSTALL R6-1R "ONE WAY" & R6-4B SIGN 36 INCHES ABOVE TRUCK APRON IN LANDSCAPED ISLAND
- INSTALL R28(CA) "NO PARKING ANYTIME" SIGN
- INSTALL 2' WIDE & 10' LONG WHITE CROSSWALK STRIPES @ 4' O.C.
- INSTALL CALTRANS "YEILD" PAVEMENT MARKER PER CALTRANS STANDARD PLANS MAY 2010
- STOP MARKING PER CALTRANS STD PLAN A24D
- KEEP CLEAR WARNING, PER CALTRANS STD PLAN A24D
- ONLY MARKING PER CALTRANS STD PLAN A24D
- YIELD LINE PER STD PLAN A24E
- BIKE LANE SYMBOL PER CALTRANS S
- RAILROAD CROSSING SYMBOL PER CALTRANS STD PLAN A24B
- TYPE IV ARROW
- FISH-HOOK ARROW TYPE LTC
- FISH-HOOK ARROW TYPE LCR
- TYPE VII (L) ARROW
- INSTALL R8-10 SIGN "STOP HERE WHEN FLASHING"
- RED FLASHING BEACON SEE SHEET E-3.

PD-1

SCALE: 1" = 20'
0 10 20 30 40

PETERS ENGINEERING GROUP
952 POLLASKY AVENUE
CLOVIS, CALIFORNIA 93612
PHONE (559) 299-1544
WWW.PETERS-ENGINEERING.COM

CITY OF REEDLEY
PUBLIC WORKS DEPARTMENT
1733 9TH STREET
REEDLEY, CALIFORNIA 93654

	BY
DESIGN	PNG
DRAWN	PNG
CHECKED	JLR

ORIGINAL SCALE IN INCHES FOR REDUCED PLANS 0 1 2 3

REED AVENUE IMPROVEMENTS
SIGNING & STRIPING PLAN – REED AVENUE STA 35+00 TO STA 40+50

DISREGARD PRINTS BEARING EARLIER REVISION DATES →
REVISION DATES (PRELIMINARY STAGE ONLY)

DWG: S:\2014\14-013\Acad\Roundabout\Planset\14-013 PD-1.dwg USER: Phil Ginther DATE: Jun 03, 2016 11:14am

SHEET NO.	TOTAL SHEETS
31	52

REGISTERED CIVIL ENGINEER

MAY 31, 2016

DATE

REGISTERED PROFESSIONAL ENGINEER
JOHN ROWLAND
NO. C52753
EXP. 12-31-16
CIVIL
STATE OF CALIFORNIA

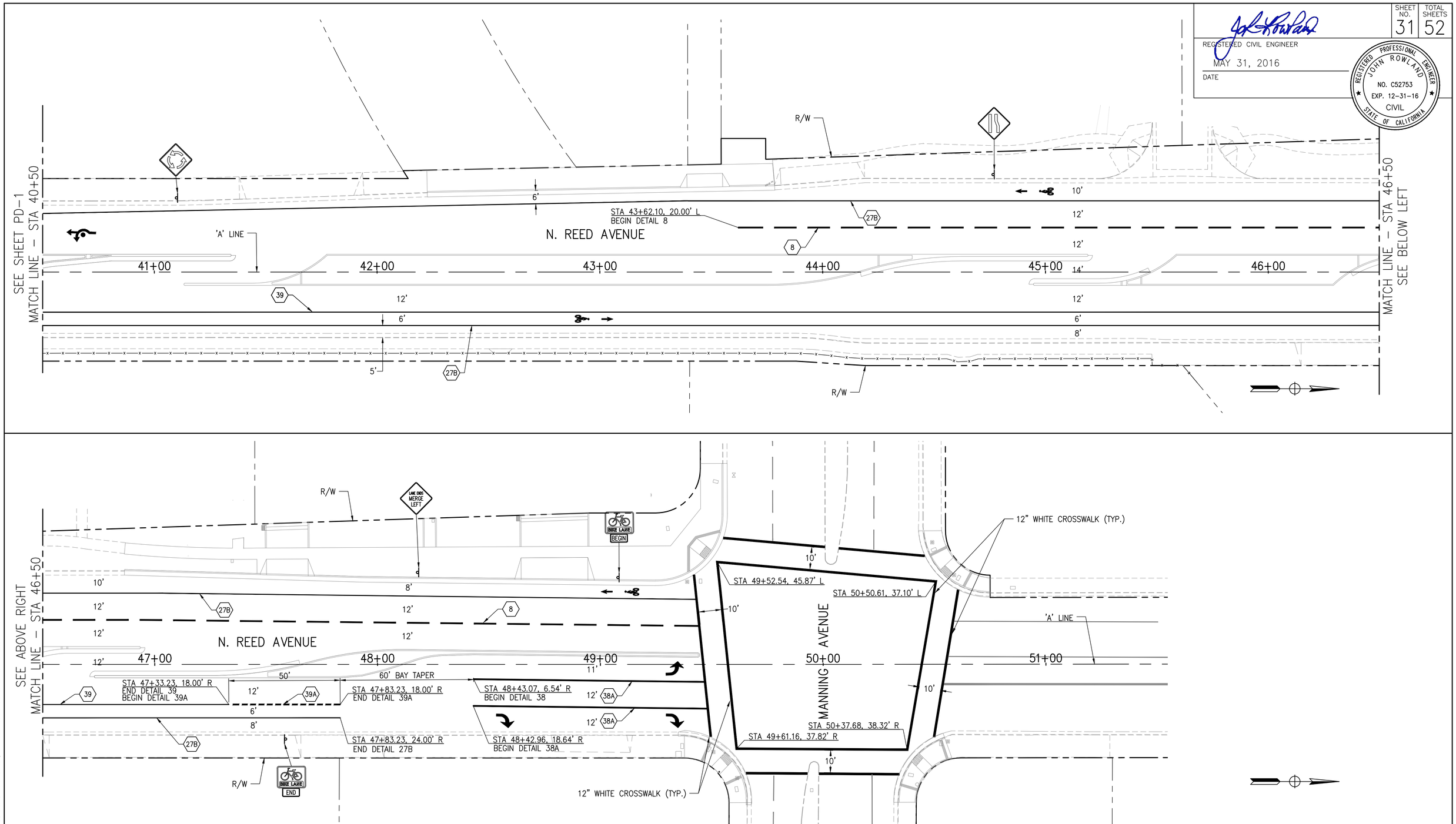

PD-2

SCALE: 1" = 20'

0 10 20 30 40

PETERS ENGINEERING GROUP
952 POLLASKY AVENUE
CLOVIS, CALIFORNIA 93612
PHONE (559) 299-1544
WWW.PETERS-ENGINEERING.COM

CITY OF REEDLEY
PUBLIC WORKS DEPARTMENT
1733 9TH STREET
REEDLEY, CALIFORNIA 93654

	BY	
DESIGN	PNG	
DRAWN	PNG	
CHECKED	JLR	

REED AVENUE IMPROVEMENTS

SIGNING & STRIPING PLAN – REED AVENUE
STA 40+50 TO STA 52+00

ORIGINAL SCALE IN INCHES FOR REDUCED PLANS 0 1 2 3

DISREGARD PRINTS BEARING EARLIER REVISION DATES

REVISION DATES (PRELIMINARY STAGE ONLY)

DWG: S:\2014\14-013\Acad\Roundabout\Planset\14-013 PD-1.dwg USER: Phil Ginther DATE: Jun 03, 2016 11:14am

REGISTERED CIVIL ENGINEER

MAY 31, 2016

DATE

REGISTERED PROFESSIONAL ENGINEER JOHN ROWLAND NO. C52753 EXP. 12-31-16 CIVIL STATE OF CALIFORNIA

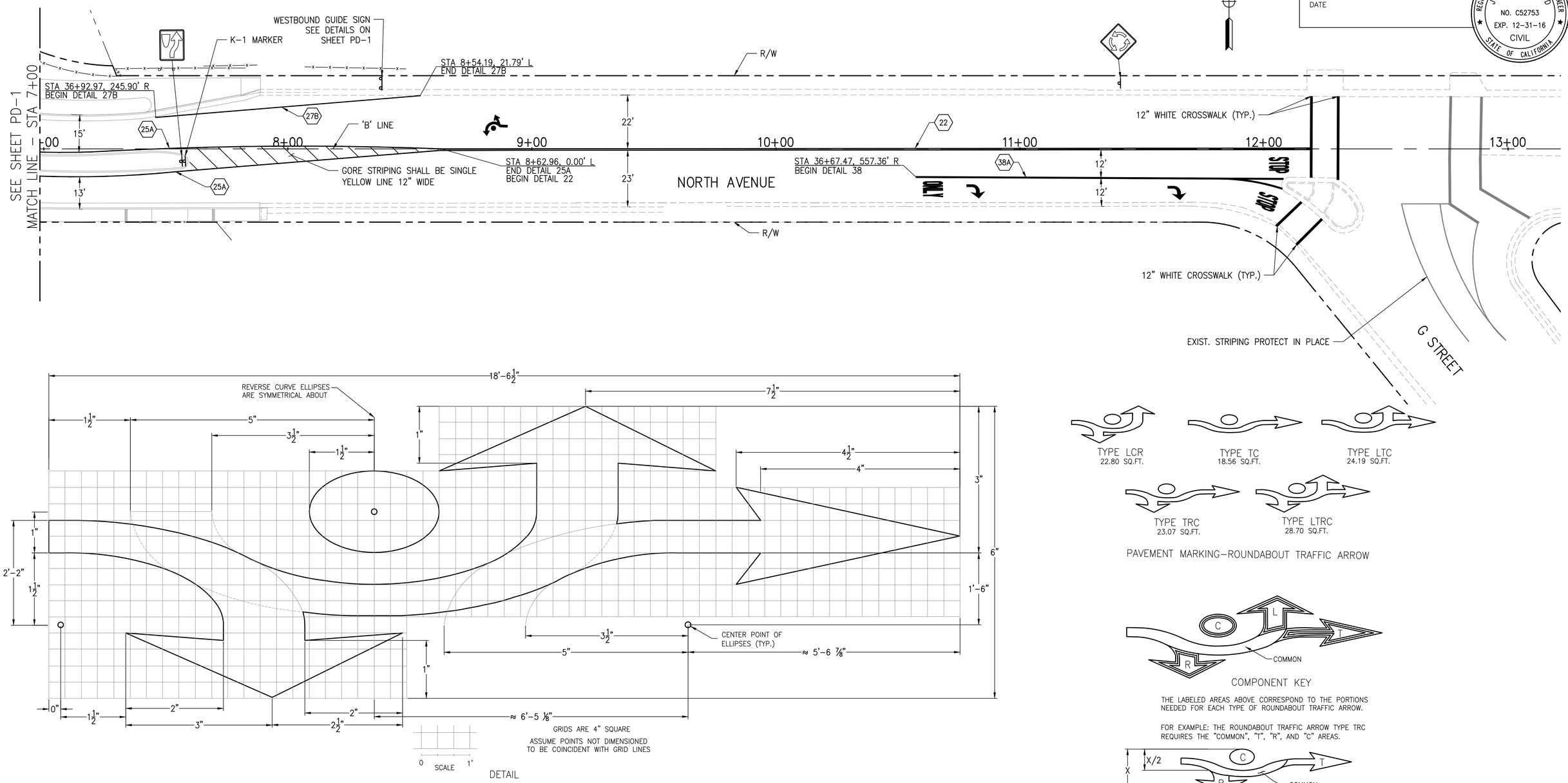

DETAIL

PAVEMENT MARKING–ROUNDABOUT TRAFFIC ARROW

COMPONENT KEY

THE LABELED AREAS ABOVE CORRESPOND TO THE PORTIONS NEEDED FOR EACH TYPE OF ROUNDABOUT TRAFFIC ARROW.

FOR EXAMPLE: THE ROUNDABOUT TRAFFIC ARROW TYPE TRC REQUIRES THE "COMMON", "T", "R", AND "C" AREAS.

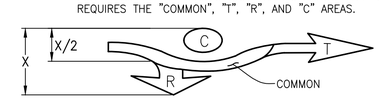

ROUNDABOUT TRAFFIC ARROW TYPE TRC

CENTER THE ARROW ON THE LANE CENTERLINE BETWEEN THE LATERAL EXTREMITIES OF THAT ARROW TYPE.

PD-3

SCALE: 1" = 20'

0 10 20 30 40

PETERS ENGINEERING GROUP
952 POLLASKY AVENUE
CLOVIS, CALIFORNIA 93612
PHONE (559) 299-1544
WWW.PETERS-ENGINEERING.COM

CITY OF REEDLEY
PUBLIC WORKS DEPARTMENT
1733 9TH STREET
REEDLEY, CALIFORNIA 93654

	BY
DESIGN	PNG
DRAWN	PNG
CHECKED	JLR

REED AVENUE IMPROVEMENTS

SIGNING & STRIPING PLAN – NORTH AVENUE
STA 7+00 TO STA 13+00

ORIGINAL SCALE IN INCHES FOR REDUCED PLANS 0 1 2 3

DISREGARD PRINTS BEARING EARLIER REVISION DATES →

REVISION DATES (PRELIMINARY STAGE ONLY)

DWG: S:\2014\14-013\Acad\Roundabout\Plotset\14-013 PD-1.dwg USER: Phil Ginther DATE: Jun 03, 2016 11:14am

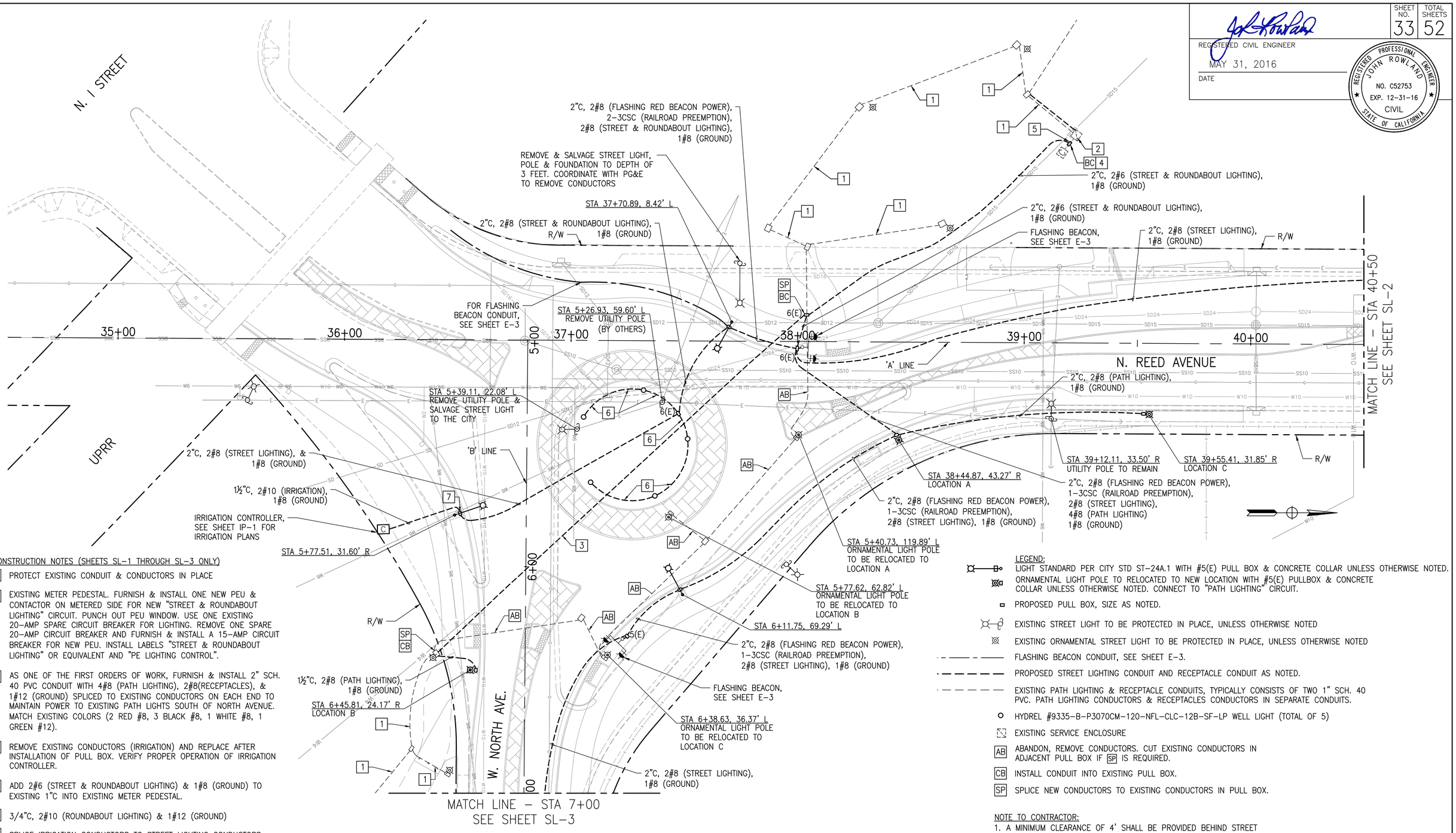

REGISTERED CIVIL ENGINEER

MAY 31, 2016

DATE

REGISTERED PROFESSIONAL ENGINEER JOHN ROWLAND NO. C52753 EXP. 12-31-16 CIVIL STATE OF CALIFORNIA

SHEET NO.	TOTAL SHEETS
33	52

CONSTRUCTION NOTES (SHEETS SL-1 THROUGH SL-3 ONLY)

1. PROTECT EXISTING CONDUIT & CONDUCTORS IN PLACE
2. EXISTING METER PEDESTAL. FURNISH & INSTALL ONE NEW PEU & CONTACTOR ON METERED SIDE FOR NEW "STREET & ROUNDABOUT LIGHTING" CIRCUIT. PUNCH OUT PEU WINDOW. USE ONE EXISTING 20-AMP SPARE CIRCUIT BREAKER FOR LIGHTING. REMOVE ONE SPARE 20-AMP CIRCUIT BREAKER AND FURNISH & INSTALL A 15-AMP CIRCUIT BREAKER FOR NEW PEU. INSTALL LABELS "STREET & ROUNDABOUT LIGHTING" OR EQUIVALENT AND "PE LIGHTING CONTROL".
3. AS ONE OF THE FIRST ORDERS OF WORK, FURNISH & INSTALL 2" SCH. 40 PVC CONDUIT WITH 4#8 (PATH LIGHTING), 2#8(RECEPTACLES), & 1#12 (GROUND) SPLICED TO EXISTING CONDUCTORS ON EACH END TO MAINTAIN POWER TO EXISTING PATH LIGHTS SOUTH OF NORTH AVENUE. MATCH EXISTING COLORS (2 RED #8, 3 BLACK #8, 1 WHITE #8, 1 GREEN #12).
4. REMOVE EXISTING CONDUCTORS (IRRIGATION) AND REPLACE AFTER INSTALLATION OF PULL BOX. VERIFY PROPER OPERATION OF IRRIGATION CONTROLLER.
5. ADD 2#6 (STREET & ROUNDABOUT LIGHTING) & 1#8 (GROUND) TO EXISTING 1"C INTO EXISTING METER PEDESTAL.
6. 3/4"C, 2#10 (ROUNDABOUT LIGHTING) & 1#12 (GROUND)
7. SPLICE IRRIGATION CONDUCTORS TO STREET LIGHTING CONDUCTORS.

LEGEND:

- LIGHT STANDARD PER CITY STD ST-24A.1 WITH #5(E) PULL BOX & CONCRETE COLLAR UNLESS OTHERWISE NOTED.
- ORNAMENTAL LIGHT POLE TO RELOCATED TO NEW LOCATION WITH #5(E) PULLBOX & CONCRETE COLLAR UNLESS OTHERWISE NOTED. CONNECT TO "PATH LIGHTING" CIRCUIT.
- PROPOSED PULL BOX, SIZE AS NOTED.
- EXISTING STREET LIGHT TO BE PROTECTED IN PLACE, UNLESS OTHERWISE NOTED
- EXISTING ORNAMENTAL STREET LIGHT TO BE PROTECTED IN PLACE, UNLESS OTHERWISE NOTED
- FLASHING BEACON CONDUIT, SEE SHEET E-3.
- PROPOSED STREET LIGHTING CONDUIT AND RECEPTACLE CONDUIT AS NOTED.
- EXISTING PATH LIGHTING & RECEPTACLE CONDUITS, TYPICALLY CONSISTS OF TWO 1" SCH. 40 PVC. PATH LIGHTING CONDUCTORS & RECEPTACLES CONDUCTORS IN SEPARATE CONDUITS.
- HYDREL #9335-B-P3070CM-120-NFL-CLC-12B-SF-LP WELL LIGHT (TOTAL OF 5)
- EXISTING SERVICE ENCLOSURE
- AB — ABANDON, REMOVE CONDUCTORS. CUT EXISTING CONDUCTORS IN ADJACENT PULL BOX IF SP IS REQUIRED.
- CB — INSTALL CONDUIT INTO EXISTING PULL BOX.
- SP — SPLICE NEW CONDUCTORS TO EXISTING CONDUCTORS IN PULL BOX.

NOTE TO CONTRACTOR:

1. A MINIMUM CLEARANCE OF 4' SHALL BE PROVIDED BEHIND STREET LIGHT AND BACK OF SIDEWALK.
2. FOR FLASHING BEACON & TRAFFIC SIGNAL ELECTRICAL PLANS, SEE SHEETS E-1 THROUGH E-5

SL-1

SCALE: 1" = 20'

0 10 20 30 40

PETERS ENGINEERING GROUP
952 POLLASKY AVENUE
CLOVIS, CALIFORNIA 93612
PHONE (559) 299-1544
WWW.PETERS-ENGINEERING.COM

CITY OF REEDLEY
PUBLIC WORKS DEPARTMENT
1733 9TH STREET
REEDLEY, CALIFORNIA 93654

	BY
DESIGN	PNG
DRAWN	PNG
CHECKED	JLR

REED AVENUE IMPROVEMENTS

STREET LIGHTING REED AVE. – STA 35+00 TO STA 40+50

ORIGINAL SCALE IN INCHES FOR REDUCED PLANS 0 1 2 3

DISREGARD PRINTS BEARING EARLIER REVISION DATES

REVISION DATES (PRELIMINARY STAGE ONLY)

DWG: S:\2014\14-013\Local\Roundabout\Planset\14-013 SL-1.dwg USER: Phil Ginther DATE: Jun 03, 2016 11:15am

SHEET NO.	TOTAL SHEETS
34	52

REGISTERED CIVIL ENGINEER

MAY 31, 2016

DATE

REGISTERED PROFESSIONAL ENGINEER
JOHN ROWLAND
NO. C52753
EXP. 12-31-16
CIVIL
STATE OF CALIFORNIA

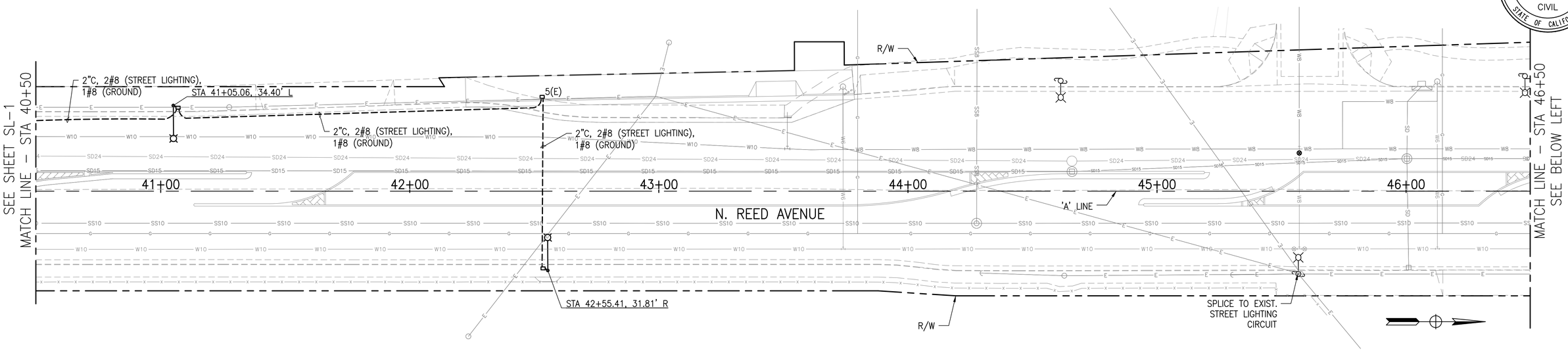

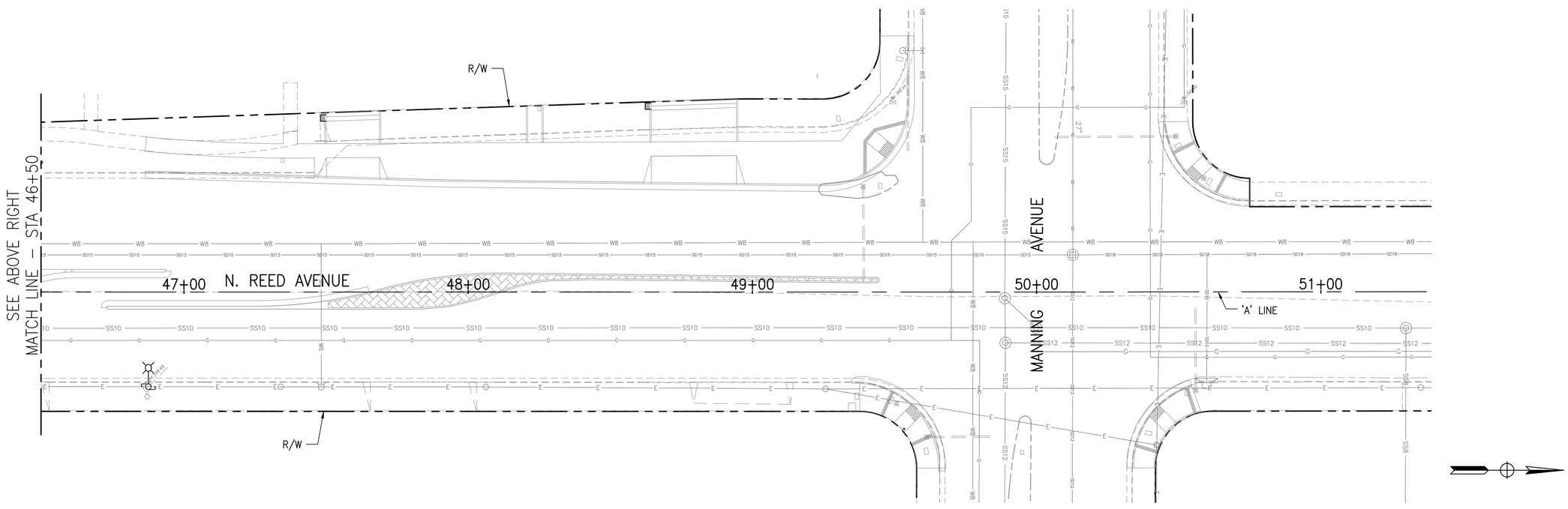

SL–2

SCALE: 1" = 20'

0 10 20 30 40

PETERS ENGINEERING GROUP
952 POLLASKY AVENUE
CLOVIS, CALIFORNIA 93612
PHONE (559) 299-1544
WWW.PETERS-ENGINEERING.COM

CITY OF REEDLEY
PUBLIC WORKS DEPARTMENT
1733 9TH STREET
REEDLEY, CALIFORNIA 93654

	BY
DESIGN	PNG
DRAWN	PNG
CHECKED	JLR

REED AVENUE IMPROVEMENTS

STREET LIGHTING REED AVE. – STA 40+50 TO STA 52+00

ORIGINAL SCALE IN INCHES FOR REDUCED PLANS 0 1 2 3

DISREGARD PRINTS BEARING EARLIER REVISION DATES

REVISION DATES (PRELIMINARY STAGE ONLY)

DWG: S:\2014\14-013\Acad\Roundabout\Plansel\14-013 SL-1.dwg USER: Phil Ginther DATE: Jun 03, 2016 11:15am

SHEET NO.	TOTAL SHEETS
35	52

REGISTERED CIVIL ENGINEER

MAY 31, 2016

DATE

REGISTERED PROFESSIONAL ENGINEER
JOHN ROWLAND
NO. C52753
EXP. 12-31-16
CIVIL
STATE OF CALIFORNIA

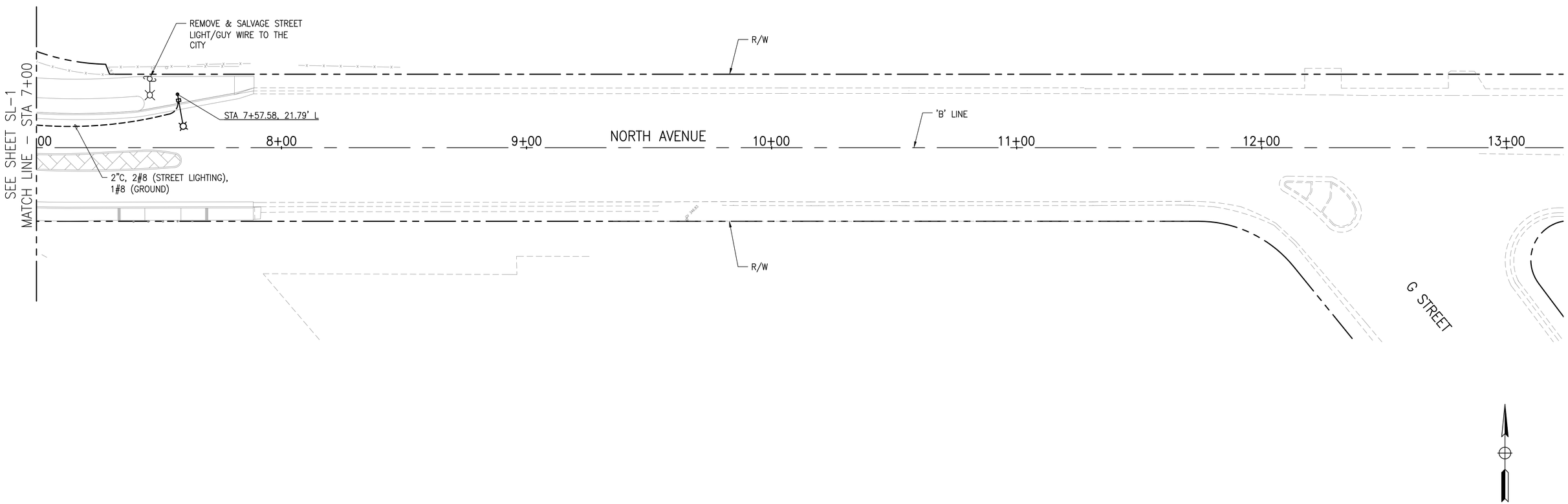

SL-3

SCALE: 1" = 20'

0 10 20 30 40

PETERS ENGINEERING GROUP
952 POLLASKY AVENUE
CLOVIS, CALIFORNIA 93612
PHONE (559) 299-1544
WWW.PETERS-ENGINEERING.COM

CITY OF REEDLEY
PUBLIC WORKS DEPARTMENT
1733 9TH STREET
REEDLEY, CALIFORNIA 93654

	BY
DESIGN	PNG
DRAWN	PNG
CHECKED	JLR

REED AVENUE IMPROVEMENTS

STREET LIGHTING NORTH AVE. - STA 7+00 TO STA 13+00

ORIGINAL SCALE IN INCHES FOR REDUCED PLANS 0 1 2 3

DISREGARD PRINTS BEARING EARLIER REVISION DATES

REVISION DATES (PRELIMINARY STAGE ONLY)

DWG: S:\2014\14-013\Acad\Roundabout\Planset\14-013 SL-1.dwg USER: Phil Ginther DATE: Jun 03, 2016 11:15am

REGISTERED CIVIL ENGINEER

MAY 31, 2016

DATE

REGISTERED PROFESSIONAL ENGINEER JOHN ROWLAND NO. C52753 EXP. 12-31-16 CIVIL STATE OF CALIFORNIA

Know what's **below.** **Call** before you dig.

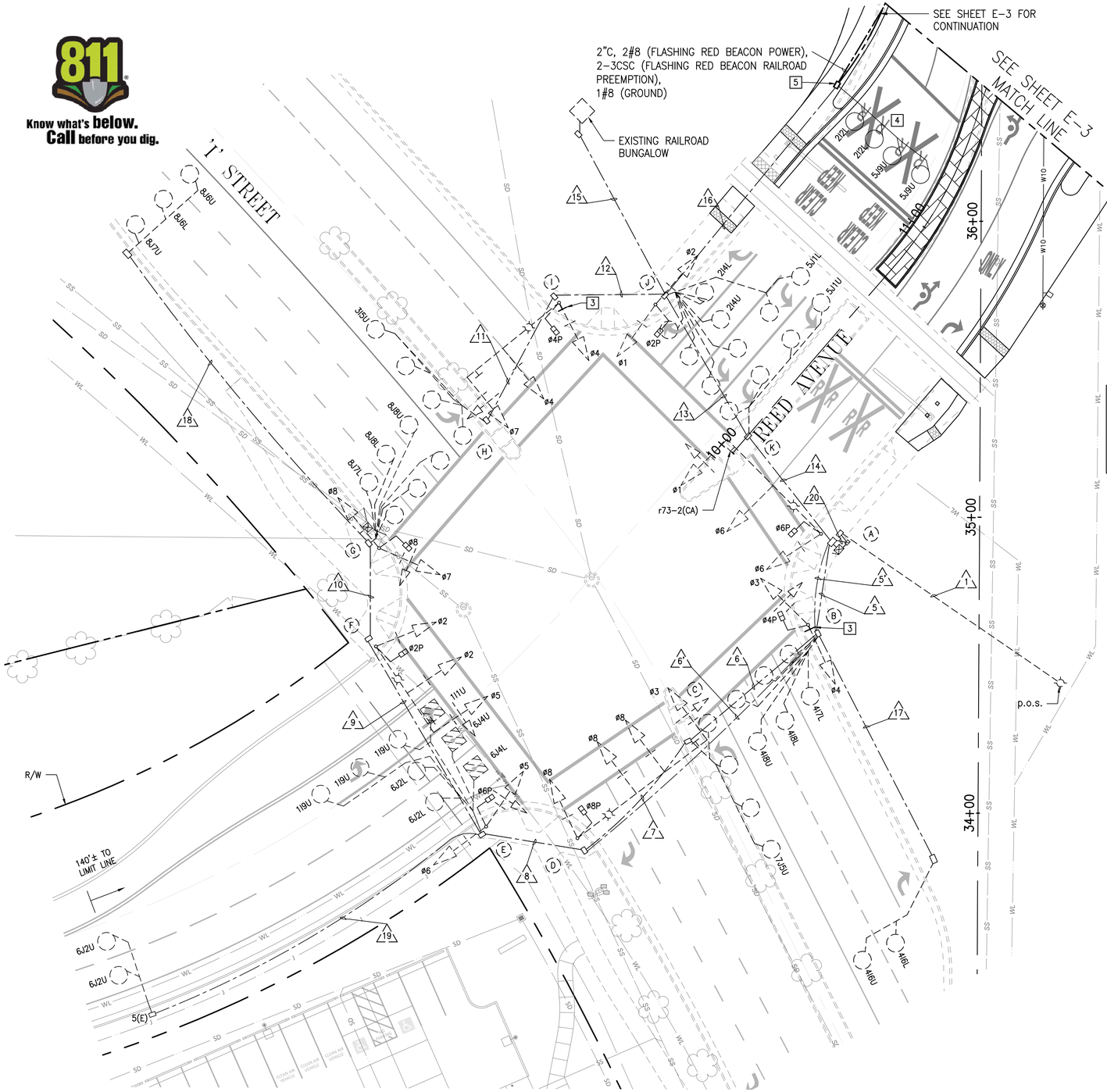

SPECIAL NOTES

WHERE UNDERGROUND AND SURFACE STRUCTURES ARE SHOWN ON THE PLANS, THE LOCATIONS ARE BELIEVED TO BE REASONABLY CORRECT BUT ARE NOT GUARANTEED. SUCH STRUCTURES ARE SHOWN FOR THE INFORMATION OF THE CONTRACTOR, BUT INFORMATION SO GIVEN IS NOT TO BE CONSTRUED AS A REPRESENTATION THAT SUCH STRUCTURES WILL BE FOUND WHERE SHOWN, OR THAT THEY REPRESENT ALL THE STRUCTURES THAT MAY BE ENCOUNTERED.

CONTRACTOR SHALL DETERMINE PRESENCE OF EXISTING FACILITIES AND SHALL NOTIFY THE ENGINEER OF POTENTIAL CONFLICTS.

LEGEND (THIS SHEET ONLY)

- PROPOSED TRAFFIC SIGNAL CONDUIT
- EXISTING TRAFFIC SIGNAL CONDUIT
- EXISTING SERVICE CONDUIT
- NEW CALTRANS TYPE E LOOP DETECTOR
- EXISTING CALTRANS TYPE E LOOP DETECTOR
- EXISTING CALTRANS TYPE D LOOP DETECTOR (5 TURNS).
- PROPOSED PULL BOX
- p.o.s. EXISTING POINT OF SERVICE

FOR OTHER SYMBOLS REFER TO STATE STANDARD DRAWINGS.

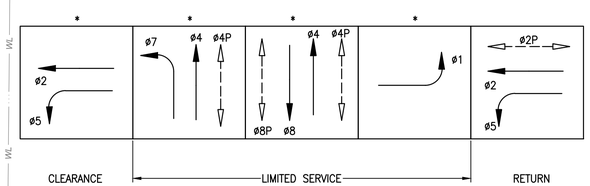

EXISTING RAILROAD PREEMPTION PHASE DIAGRAM

STEADY DEMAND SEQUENCE

* EXISTING RAILROAD PREEMPTION PHASING SHALL BE MODIFIED SUCH THAT FLASHING RED BEACON AND R3-1 ACTIVATED BLANK OUT SIGNS SHALL BE ACTIVE DURING THE NOTED PHASES.

CONSTRUCTION NOTES (THIS SHEET ONLY)

1. EXISTING CONTROLLER AND CABINET TO BE PROTECTED IN PLACE. CONTRACTOR SHALL ADD ANY EQUIPMENT NECESSARY AND MODIFY SIGNAL TIMING & PHASING TO ACCOMMODATE R3-1 ACTIVATED BLANK OUT SIGNS.
2. EXISTING METER CABINET ENCLOSURE TO BE PROTECTED IN PLACE. FURNISH & INSTALL METERED 15A CIRCUIT BREAKER LABELED "FLASHING RED BEACON."
3. FURNISH AND INSTALL R3-1 ACTIVATED BLANK OUT SIGN FOR RAILROAD PREEMPTION.
4. ABANDON EXISTING LOOP DETECTORS. INSTALL NEW LOOP DETECTORS CENTERED IN LANES.
5. RC EXISTING PULL BOX. FURNISH & INSTALL NEW 5(E) PULL BOX.

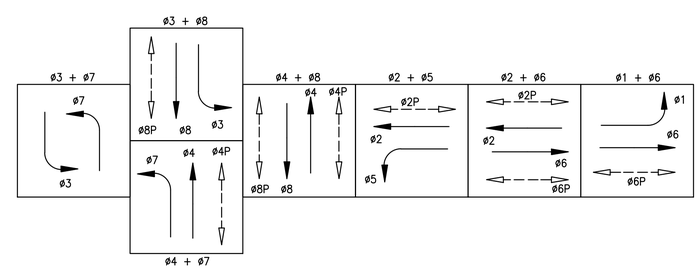

EXISTING PHASE DIAGRAM

STEADY DEMAND SEQUENCE

FLASHING: ALL PHASES RED

E-1

SCALE: 1" = 20'

0 10 20 30 40

PETERS ENGINEERING GROUP
952 POLLASKY AVENUE
CLOVIS, CALIFORNIA 93612
PHONE (559) 299-1544
WWW.PETERS-ENGINEERING.COM

CITY OF REEDLEY
PUBLIC WORKS DEPARTMENT
1733 9TH STREET
REEDLEY, CALIFORNIA 93654

	BY	
DESIGN	PNG	
DRAWN	PNG	
CHECKED	JLR	

REED AVENUE IMPROVEMENTS

REED AVE. & I STREET SIGNALIZATION PLAN

ORIGINAL SCALE IN INCHES FOR REDUCED PLANS 0 1 2 3

DISREGARD PRINTS BEARING EARLIER REVISION DATES

REVISION DATES (PRELIMINARY STAGE ONLY)

DWG: S:\2014\14-013\Acad\Roundabout\Planset\14-013 E-1.dwg USER: Phil Ginther DATE: Jun 03, 2016 11:16am

REGISTERED CIVIL ENGINEER

MAY 31, 2016

DATE

REGISTERED PROFESSIONAL ENGINEER JOHN ROWLAND NO. C52753 EXP. 12-31-16 CIVIL STATE OF CALIFORNIA

CONDUCTOR SCHEDULE

AWG OR CABLE	POLE	PHASE	1 2"	2 2"	3 2"	4 2-3"	5 3"	5' 3"	6 3"	6' 3"	7 3"	8 3"	9 3"	10 3"	11 3"	12 3"	13 3"	14 3"	15 2"	16 2"	17 2"	18 2"	19 2"	20 2"
7CSC VEH *	A	1, 6 / 6P				1 / 1																		
	B	3, 4 / R3-1, 4P				1 / ①	1 / ①																	
	D	3, 8 / 8P				1 / 1	1 / 1		1 / 1		1 / 1													
	E	5, 6 / 6P				1 / 1	1 / 1		1 / 1		1 / 1	1 / 1												
	F	2, 5 / 2P				1 / 1	1 / 1		1 / 1		1 / 1	1 / 1	1 / 1											
	G	7, 8 / 8P				1 / 1	1 / 1		1 / 1		1 / 1	1 / 1	1 / 1	1 / 1										
* 5CSC PED OR R3-1	I	4, 7 / R3-1, 4P				1 / ①										1 / ①	1 / ①	1 / ①						
	J	1, 2 / 2P				1 / 1											1 / 1	1 / 1						
TOTAL 7CSC/5CSC						8 / 8	5 / 5		4 / 4		4 / 4	3 / 3	2 / 2	1 / 1		1 / 1	2 / 2	2 / 2						
*3CSC PPB	A	4,6				1																		
	D	6,8				1	1		1		1													
	F	2,8				1	1		1		1	1	1											
	I	2,4				1										1	1	1						
TOTAL 3CSC						4	2		2		2	1	1			1	1	1						
TYPE C DLC *	LOOP DETECT.	PED. PUSH BUTTON ø *					6 / 1				6 / 1	8 / 1		2 / 1	2 / 1	4 / 1		4 / 1						
		ø1				2		2		2		2												
		ø2				3 [1]											3 [1]	3 [1]		1 [1]				
		ø3				1									1	1	1	1						
		ø4				5	5		5												2			
		ø5				2 [1]											1 [1]	2 [1]		[1]				
		ø6				4		4		4		4											1	
		ø7				1	1		1															
		ø8				6	6		6		6	6	6	6								3		
TOTAL DLC						25	13	6	12	6	7	13	6	7	2	2	6	8		2	2	3		
#2	SERVICE		3																					
#8	LUMINAIRES						2		2		2	2	2			2	2	2						2
#8	IISNS				2		2		2		2	2	2			2	2	2						2
#8	BONDING WIRE				1		1	1	1	1	1	1	1			1	1	1		◇1				1
#4	SIGNAL			2																				
6-#20	S.I.C.					1	1																	
3CSC	R.R. PREEMPTION (SIGNALS)					1											1	1	1					
3CSC	R.R. PREEMPTION (RED BEACONS)																		◇2	◇2				
#8	FLASHING RED BEACON POWER																	◇2		◇2				◇2

* NUMBER INDICATIONS ARE THE NUMBER OF CABLES WITHIN CONDUIT.

NOTE: ALL CONDUCTORS ARE EXISTING UNLESS OTHERWISE NOTED. NUMBERS IN DIAMONDS REPRESENT NEW CABLES OR CONDUCTORS. NUMBERS IN CIRCLES INDICATE EXISTING CABLES WITH SPARE CONDUCTORS THAT SHALL BE UTILIZED FOR THE NEW R3-1 ACTIVATED BLANKOUT SIGNS. CONTRACTOR SHALL DETERMINE WHETHER SPARE CABLES ALREADY EXIST. USE EXISTING SPARE CABLES IF EXISTING. NUMBERS IN SQUARES INDICATE AN EXISTING ø2 ADVANCE LOOP DLC THAT SHALL BE CHANGED TO A ø5 ADVANCE LOOP DLC. ALTHOUGH SHOWN IN BOTH ROWS, THIS REPRESENTS A SINGLE EXISTING DLC.

EQUIPMENT SCHEDULE

LOCATION	POLE	MAST ARM LENGTH: SIGNAL	MAST ARM LENGTH: LUMINAIRE	SIGNAL MOUNTING: POST	SIGNAL MOUNTING: F DISTANCE FROM END OF ARM	SIGNAL MOUNTING: PED	BACK-PLATE	TYPE B PPB: ø	TYPE B PPB: ARROW	LUMINAIRE WATTAGE	IISNS	NOTES:
A	26-4-113	45'	15'	SV-1-T	MAS (F=0') MAS (F=22')	SP-1-T	3	4	←	150 W	I STREET	
B	1-A (10')	–	–	TV-2-T	–	SP-1-T	2	6	→	–	–	FURNISH AND INSTALL R3-1 ACTIVATED BLANK OUT SIGN FOR RAILROAD PREEMPTION.
C	PPB	–	–	–	–	–	–	6	←/→	–	–	
D	29-5-113	55'	15'	SV-2-T	MAS (F=0'), MAS (F=18') MAS (F=30')	SP-1-T	4	6	←	150 W	REED AVE	
E	1-A (10')	–	–	TV-2-T	–	SP-1-T	2	8	→	–	–	
F	24-4-113	35'	15'	SV-1-T	MAS (F=0') MAS (F=18')	SP-1-T	3	8	←	150 W	I STREET	
G	1-A (10')	–	–	TV-2-T	–	SP-1-T	2	2	→	–	–	
H	PPB	–	–	–	–	–	–	2	←/→	–	–	
I	26-4-113	40'	15'	SV-1-T	MAS (F=0') MAS (F=16')	SP-1-T	3	2	←	150 W	REED AVE	FURNISH AND INSTALL R3-1 ACTIVATED BLANK OUT SIGN FOR RAILROAD PREEMPTION.
J	1-A (10')	–	–	TV-2-T	–	SP-1-T	2	4	→	–	–	
K	PPB	–	–	–	–	–	–	4	←/→	–	–	

NOTES:
1. ALL EQUIPMENT IS EXISTING UNLESS OTHERWISE NOTED.
2. CONTRACTOR TO VERIFY OVERHEAD AND UNDERGROUND UTILITY CLEARANCE. ARRANGE FOR UTILITY RELOCATION AS NECESSARY WITH APPROVAL OF ENGINEER.

GENERAL NOTES (SHEETS E-1 THROUGH E-5 ONLY)

1. WORK SHALL BE DONE IN ACCORDANCE WITH THE 2010 EDITION OF THE STATE OF CALIFORNIA DEPARTMENT OF TRANSPORTATION STANDARD PLANS AND SPECIFICATIONS.
2. SCHEDULING OF WORK SHALL CONFORM TO THE PROVISIONS IN SECTION 86-1.07, "SCHEDULING OF WORK," OF THE STATE STANDARD SPECIFICATIONS. PARTICULAR ATTENTION SHALL BE DIRECTED TO "NO ABOVE GROUND WORK, EXCEPT SERVICE EQUIPMENT, SHALL BE PERFORMED UNTIL THE CONTRACTOR HAS ALL MATERIALS ON HAND TO COMPLETE THAT PARTICULAR SIGNAL LOCATION OR LIGHTING CIRCUIT."
3. THE CONTRACTOR IS RESPONSIBLE FOR VERIFICATION OF ALL EXISTING UTILITIES, WHETHER OR NOT THEY ARE SHOWN ON THESE PLANS, AND SHALL PROVIDE PROTECTION PRIOR TO, DURING, AND AFTER TRENCHING, JACKING, AND/OR BORING. THE CONTRACTOR SHALL CONTACT UNDERGROUND SERVICE ALERT (USA), TOLL FREE AT 811, AT LEAST 48 HOURS BEFORE BEGINNING WORK.
4. THE CONTRACTOR SHALL ARRANGE WITH UTILITY COMPANIES FOR ALL REQUIRED UTILITY RELOCATIONS, INCLUDING OVERHEAD CONFLICTS.
5. THESE PLANS ARE ACCURATE FOR ELECTRICAL WORK ONLY.
6. ALL TRAFFIC SIGNAL AND LIGHTING FACILITIES, INCLUDING CABINETS, STANDARDS, DETECTORS, PULL BOXES, AND CONDUITS, ARE SHOWN IN THEIR APPROXIMATE LOCATIONS. AFTER ALL UNDERGROUND UTILITIES ARE MARKED, THE CONTRACTOR SHALL MARK FINAL LOCATIONS IN THE FIELD AND NOTIFY THE CITY AT LEAST 2 WORKING DAYS PRIOR TO COMMENCING WORK TO OBSERVE THE MARKED LOCATIONS.
7. PULL BOXES SHALL BE NO. 6(E) UNLESS OTHERWISE NOTED ON THE PLANS. PULL BOXES SHALL NOT BE INSTALLED IN CURB RAMPS OR DRIVEWAYS. PULL BOXES INSTALLED IN NON-CONCRETE AREAS SHALL BE WRAPPED WITH BUILDING PAPER AND SURROUNDED WITH A 1' WIDE CONCRETE COLLAR (3-1/2" THICK PCC) SLOPED TO DRAIN AWAY FROM THE PULL BOX. PULL BOXES NOT PROTECTED BY CURBS SHALL BE TRAFFIC RATED.
8. ALL VEHICLE SIGNAL SECTIONS SHALL BE FURNISHED BY THE CONTRACTOR AND SHALL UTILIZE LIGHT EMITTING DIODE (LED) SIGNAL MODULES IN ACCORDANCE WITH THE STATE STANDARD SPECIFICATIONS. VEHICLE SIGNAL SECTIONS SHALL HAVE 12" DIAMETER LENSES.
9. ALL RESURFACING SHALL MATCH EXISTING SURFACES AFTER SIGNAL AND LIGHTING FACILITIES ARE REMOVED AND/OR RELOCATED.
10. ALL CONDUITS SHALL BE TYPE 3. DETECTOR TERMINATION CONDUIT SHALL BE TYPE 3 OR TYPE 4. CONDUIT BENEATH EXISTING ROADWAY SURFACES TO REMAIN SHALL BE INSTALLED BY JACK-AND-BORE OR DIRECTIONAL DRILLING METHODS. TRENCHING FOR INSTALLATION OF CONDUITS IS ALLOWED IN NON-PAVEMENT AREAS AND AREAS OF PAVEMENT RECONSTRUCTION. TRENCHING IS NOT ALLOWED IN EXISTING PAVEMENT TO REMAIN AND EXISTING DRIVEWAYS TO REMAIN.
11. EXISTING ELECTRICAL SYSTEMS, OR APPROVED TEMPORARY REPLACEMENTS THEREOF, SHALL BE KEPT IN EFFECTIVE OPERATION DURING THE PROGRESS OF THE WORK, EXCEPT WHEN SHUTDOWN IS PERMITTED. THE CONTRACTOR SHALL NOTIFY THE ENGINEER AT LEAST ONE FULL WORKING DAY (NOT LESS THAN 24 HOURS) PRIOR TO THE SHUTDOWN OF ANY TRAFFIC SIGNAL AND LIGHTING SYSTEM. THE CONTRACTOR MAY USE TEMPORARY SPLICES AND WIRING AS APPROVED BY THE ENGINEER TO MAINTAIN EXISTING AND TEMPORARY TRAFFIC SIGNAL AND LIGHTING SYSTEMS. SHUTDOWNS OF TRAFFIC SIGNAL AND LIGHTING SYSTEMS SHALL BE LIMITED TO THE PERIOD FROM 9 A.M. TO 4 P.M. OF NORMAL WORKING DAYS, EXCLUDING LEGAL HOLIDAYS, WEEKENDS, AND NON-WORKING DAYS AS DETERMINED BY THE ENGINEER.
12. CONTRACTOR SHALL FURNISH AND INSTALL PG&E STREET LIGHT NUMBERS ON POLES FOR ALL NEW LUMINAIRES INSTALLED. POLE NUMBERS SHALL BE SHOWN ON THE AS-BUILT DRAWINGS.
13. FIXTURE BALLASTS SHALL HAVE A HIGH POWER FACTOR.
14. 90-DEGREE CONDUIT BENDS SHALL NOT BE ALLOWED. MINIMUM SWEEP RADIUS SHALL BE SIX (6) TIMES THE INSIDE DIAMETER OF THE CONDUIT.
15. LOOP SEALANT SHALL BE ELASTOMERIC SEALANT 3M, BLACK 5000 OR HOT-MELT RUBBERIZED ASPHALT SEALANT, OR APPROVED EQUAL.
17. UNLESS DIRECTED OTHERWISE BY THE ENGINEER, THE CONTRACTOR SHALL MAINTAIN AS-BUILT DRAWINGS, INCLUDING ALL FIELD INVESTIGATION AND POTHOLE INFORMATION.

E-2

PETERS ENGINEERING GROUP
952 POLLASKY AVENUE
CLOVIS, CALIFORNIA 93612
PHONE (559) 299-1544
WWW.PETERS-ENGINEERING.COM

CITY OF REEDLEY
PUBLIC WORKS DEPARTMENT
1733 9TH STREET
REEDLEY, CALIFORNIA 93654

	BY
DESIGN	PNG
DRAWN	PNG
CHECKED	JLR

REED AVENUE IMPROVEMENTS
EQUIPMENT SCHEDULE & NOTES

ORIGINAL SCALE IN INCHES FOR REDUCED PLANS 0 1 2 3

DISREGARD PRINTS BEARING EARLIER REVISION DATES →

REVISION DATES (PRELIMINARY STAGE ONLY)

DWG: S:\2014\14-013\Acad\Roundabout\Planset\14-013 E-1.dwg USER: Phil Ginther DATE: Jun 03, 2016 11:16am

NOTE TO CONTRACTOR:

1. SEE SHEETS SL-1, SL-2 & SL-3 FOR STREET LIGHTING PLANS AND CONTINUATION OF BEACON CONDUCTORS.

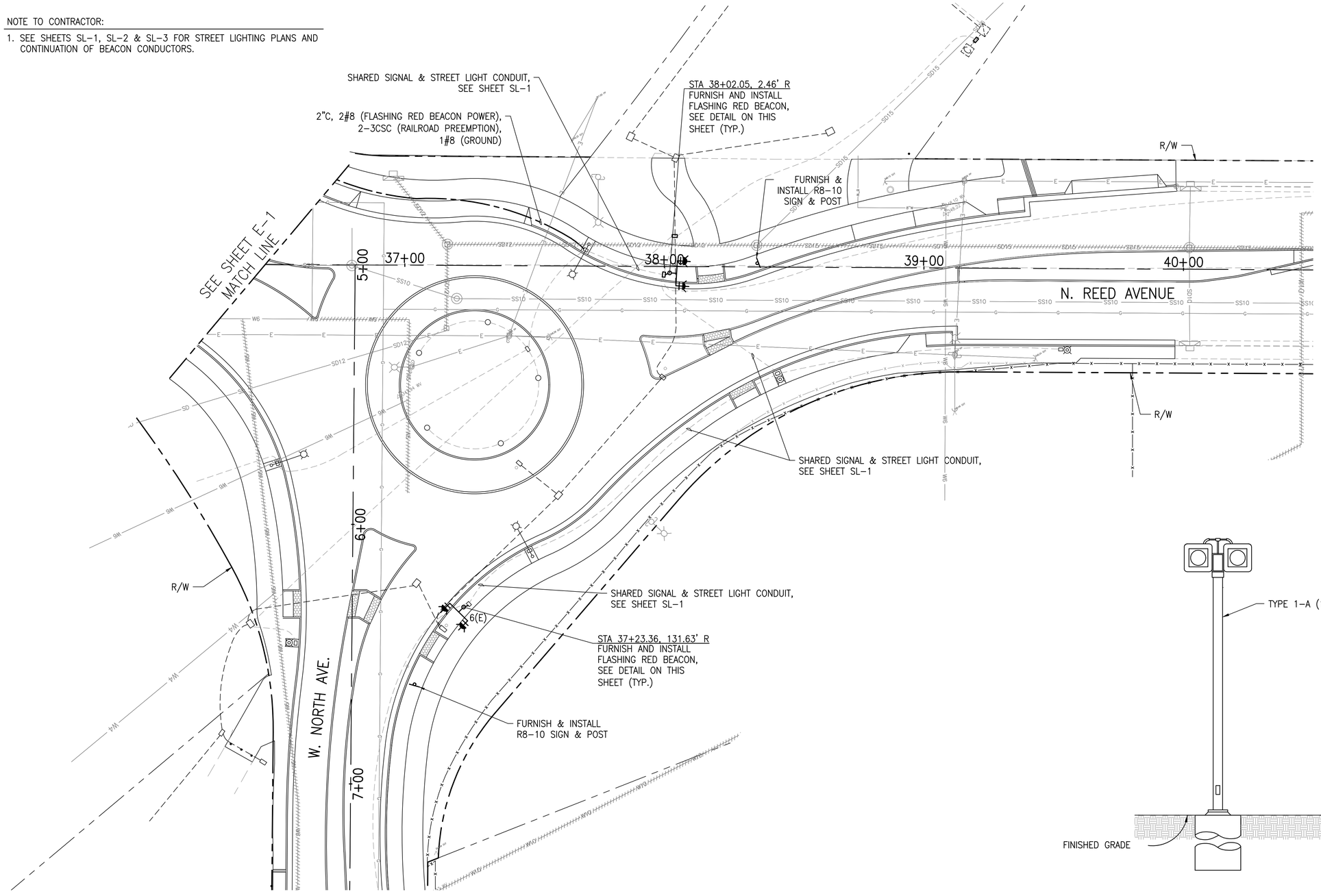

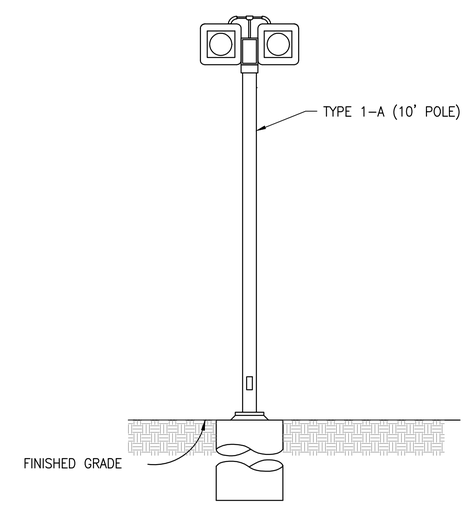

FLASHING RED BEACON

NTS

FLASHING RED BEACON DETAIL NOTES:

1. FLASHING RED BEACON ASSEMBLY IS A TYPE 1-A (10' POLE) SIMILAR TO CALTRANS STANDARD PLAN ES-7J MODIFIED WITH TWO SIDE-BY-SIDE SIGNAL FACES ON A TV-2-T MOUNTING AND NO SIGNAGE AS SHOWN.
2. FLASHING BEACON CONTROL ASSEMBLY SHALL BE McCAIN RAILROAD ACTIVATED FLASHING BEACON CONTROL ASSEMBLY (McCAIN PART NO. M47705) OR APPROVED EQUAL. SAN JOAQUIN VALLEY RAILROAD WILL PROVIDE A NORMALLY CLOSED RELAY IN THE RAILROAD BUNGALOW FOR THE 120V RAILROAD PREEMPTION SIGNAL.
3. RED SIGNAL SECTIONS SHALL FLASH ALTERNATELY AND ONLY WHEN ACTIVATED BY THE RAILROAD.

REGISTERED CIVIL ENGINEER

MAY 31, 2016

DATE

REGISTERED PROFESSIONAL ENGINEER JOHN ROWLAND NO. C52753 EXP. 12-31-16 CIVIL STATE OF CALIFORNIA

SHEET NO.	TOTAL SHEETS
38	52

E-3

SCALE: 1" = 20'

0 10 20 30 40

PETERS ENGINEERING GROUP

952 POLLASKY AVENUE
CLOVIS, CALIFORNIA 93612

PHONE (559) 299-1544
WWW.PETERS-ENGINEERING.COM

CITY OF REEDLEY
PUBLIC WORKS DEPARTMENT
1733 9TH STREET
REEDLEY, CALIFORNIA 93654

	BY
DESIGN	PNG
DRAWN	PNG
CHECKED	JLR

REED AVENUE IMPROVEMENTS

RED FLASHING BEACON PLAN

ORIGINAL SCALE IN INCHES FOR REDUCED PLANS 0 1 2 3

DISREGARD PRINTS BEARING EARLIER REVISION DATES

REVISION DATES (PRELIMINARY STAGE ONLY)

DWG: S:\2014\14-013\Acad\Roundabout\Planset\14-013 E-3.dwg USER: Phil Ginther DATE: Jun 03, 2016 11:16am

REGISTERED CIVIL ENGINEER

MAY 31, 2016

DATE

REGISTERED PROFESSIONAL ENGINEER JOHN ROWLAND NO. C52753 EXP. 12-31-16 CIVIL STATE OF CALIFORNIA

SPECIAL NOTES

WHERE UNDERGROUND AND SURFACE STRUCTURES ARE SHOWN ON THE PLANS, THE LOCATIONS ARE BELIEVED TO BE REASONABLY CORRECT BUT ARE NOT GUARANTEED. SUCH STRUCTURES ARE SHOWN FOR THE INFORMATION OF THE CONTRACTOR, BUT INFORMATION SO GIVEN IS NOT TO BE CONSTRUED AS A REPRESENTATION THAT SUCH STRUCTURES WILL BE FOUND WHERE SHOWN, OR THAT THEY REPRESENT ALL THE STRUCTURES THAT MAY BE ENCOUNTERED.

CONTRACTOR SHALL DETERMINE PRESENCE OF EXISTING FACILITIES AND SHALL NOTIFY THE ENGINEER OF POTENTIAL CONFLICTS.

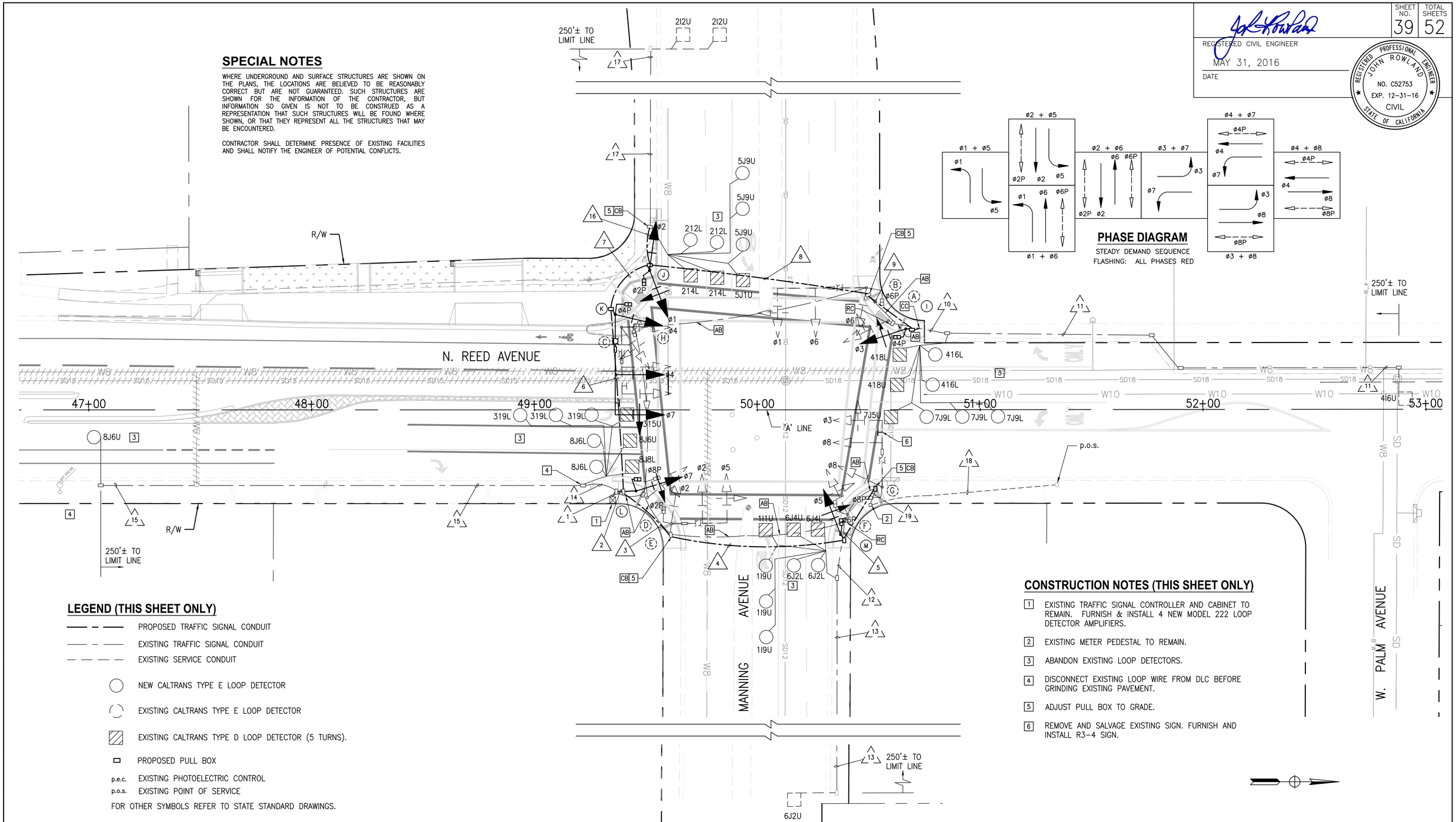

LEGEND (THIS SHEET ONLY)

- PROPOSED TRAFFIC SIGNAL CONDUIT
- EXISTING TRAFFIC SIGNAL CONDUIT
- EXISTING SERVICE CONDUIT
- NEW CALTRANS TYPE E LOOP DETECTOR
- EXISTING CALTRANS TYPE E LOOP DETECTOR
- EXISTING CALTRANS TYPE D LOOP DETECTOR (5 TURNS).
- PROPOSED PULL BOX
- p.e.c. EXISTING PHOTOELECTRIC CONTROL
- p.o.s. EXISTING POINT OF SERVICE

FOR OTHER SYMBOLS REFER TO STATE STANDARD DRAWINGS.

CONSTRUCTION NOTES (THIS SHEET ONLY)

1. EXISTING TRAFFIC SIGNAL CONTROLLER AND CABINET TO REMAIN. FURNISH & INSTALL 4 NEW MODEL 222 LOOP DETECTOR AMPLIFIERS.
2. EXISTING METER PEDESTAL TO REMAIN.
3. ABANDON EXISTING LOOP DETECTORS.
4. DISCONNECT EXISTING LOOP WIRE FROM DLC BEFORE GRINDING EXISTING PAVEMENT.
5. ADJUST PULL BOX TO GRADE.
6. REMOVE AND SALVAGE EXISTING SIGN. FURNISH AND INSTALL R3-4 SIGN.

90% SUBMITTAL – NOT FOR CONSTRUCTION

E-4

SCALE: 1" = 20'

0 10 20 30 40

PETERS ENGINEERING GROUP
952 POLLASKY AVENUE
CLOVIS, CALIFORNIA 93612
PHONE (559) 299-1544
WWW.PETERS-ENGINEERING.COM

CITY OF REEDLEY
PUBLIC WORKS DEPARTMENT
1733 9TH STREET
REEDLEY, CALIFORNIA 93654

DESIGN	BY	JR
DRAWN	BY	PNG
CHECKED	BY	JR

ORIGINAL SCALE IN INCHES FOR REDUCED PLANS 0 1 2 3

REED AVENUE IMPROVEMENTS

TRAFFIC SIGNAL MODIFICATIONS
INTERSECTION OF REED & MANNING AVENUES

DISREGARD PRINTS BEARING EARLIER REVISION DATES

REVISION DATES (PRELIMINARY STAGE ONLY)

DWG: S:\2014\14-013\Acad\Roundabout\Planset\14-013 E-4.dwg USER: Phil Ginther DATE: Jun 03, 2016 11:17am

REGISTERED CIVIL ENGINEER

MAY 31, 2016

DATE

REGISTERED PROFESSIONAL ENGINEER JOHN ROWLAND NO. C52753 EXP. 12-31-16 CIVIL STATE OF CALIFORNIA

CONDUCTOR SCHEDULE

AWG OR CABLE	POLE	PHASE	TYPE 1 CONDUIT RUN NUMBER AND SIZE																		
			1	2	3	4	5	6	7	8	9	10	11	12	13	14	15	16	17	18	19
			2-2½"	2-4"	4"	4"	3"	4"	4"	4"	3"	1½"	1½"	1½"	1½"	2"	1½"	2"	1½"	1½"	1½"
VEH 7CSC *	(I)	3 / 4P	1 / 1	1 / 1				1 / 1	1 / 1	1 / 1	1 / 1										
	(B)	1, 6 / 6P	1 / 1	1 / 1				1 / 1	1 / 1	1 / 1											
	(J)	1 / 2P	1 / 1	1 / 1				1 / 1	1 / 1												
	(K)	4, 7 / 4P	1 / 1	1 / 1				1 / 1													
	(L)	4 / 8P	1 / 1	1 / 1																	
	(E)	2, 5 / 2P	1 / 1	1 / 1	1 / 1																
	(M)	5 / 6P	1 / 1	1 / 1	1 / 1	1 / 1															
* PED 5CSC	(G)	3, 8 / 8P	1 / 1	1 / 1	1 / 1	1 / 1	1 / 1														
TOTAL			8 / 8	8 / 8	3 / 3	2 / 2	1 / 1	4 / 4	3 / 3	2 / 2	1 / 1										
* PPB 3CSC	(B)	4P & 6P	1	1					1	1	1										
	(G)	6P & 8P	1	1	1	1	1														
	(E)	2P & 8P	1	1	1																
	(K)	2P & 4P	1	1					1												
TOTAL			4	4	2	1	1		2	1	1										
TYPE C DLC *	LOOP DETECT.	PED. PUSH BUTTON / ø *			2P 1		8P 1		4P 1		6P 1										
		ø1	2	2	2	2								2							
		ø2	4	4				4	4									4	1		
		ø3	2													2					
		ø4	4	4				4	4	4	4	4	1								
		ø5	2	2				2	2									2			
		ø6	4	4	4	4								4	1						
		ø7	2	2				2	2	2	2	2									
		ø8	4													4	1				
TOTAL DLC			24	18	7	6	1	12	13	6	7	6	1	6	1	6	1	6	1		
#2	SERVICE																			(3)	
#4	SIGNAL POWER		2	2	2	2	2														2
#8	SAFETY LIGHTING				2	2	2	2	2	2											2
#8	GROUNDING WIRE		1	1	1	1	1	1	1	1	1	1	1	1	1	1	1	1	1		1
#12	PHOTOELECTRIC CONTROL																				3

* NUMBER INDICATIONS ARE THE NUMBER OF CABLES WITHIN CONDUIT. ALL CONDUCTORS ARE NEW UNLESS OTHERWISE NOTED. VALUES IN CIRCLES REPRESENT EXISTING CONDUCTORS TO REMAIN. ALL OTHER EXISTING CONDUCTORS SHALL BE REMOVED AND BECOME THE PROPERTY OF THE CONTRACTOR.

SPECIAL NOTES:

WHERE UNDERGROUND AND SURFACE STRUCTURES ARE SHOWN ON THE PLANS, THE LOCATIONS ARE BELIEVED TO BE REASONABLY CORRECT BUT ARE NOT GUARANTEED. SUCH STRUCTURES ARE SHOWN FOR THE INFORMATION OF THE CONTRACTOR, BUT INFORMATION SO GIVEN IS NOT TO BE CONSTRUED AS A REPRESENTATION THAT SUCH STRUCTURES WILL BE FOUND WHERE SHOWN, OR THAT THEY REPRESENT ALL THE STRUCTURES THAT MAY BE ENCOUNTERED.

CONTRACTOR SHALL DETERMINE PRESENCE OF EXISTING FACILITIES AND SHALL NOTIFY THE ENGINEER OF POTENTIAL CONFLICTS.

EQUIPMENT SCHEDULE NOTES:

1. ALL EQUIPMENT IS EXISTING UNLESS OTHERWISE INDICATED. (N) INDICATES NEW EQUIPMENT. (R) INDICATES EQUIPMENT TO BE RELOCATED FROM ITS EXISTING LOCATION.
2. CONTRACTOR TO VERIFY OVERHEAD AND UNDERGROUND UTILITY CLEARANCE. ARRANGE FOR UTILITY RELOCATION AS NECESSARY WITH APPROVAL OF ENGINEER.

* POLE LOCATIONS ARE PROVIDED FOR GUIDANCE ONLY. CONTRACTOR SHALL VERIFY UTILITY CLEARANCE AND REVISE LOCATION IF REQUIRED. NEW LOCATION SUBJECT TO ENGINEER'S APPROVAL. ALL STATION OFFSETS REFERENCE 'A' LINE.

EQUIPMENT SCHEDULE

LOCA-TION	POLE	MAST ARM LENGTH		SIGNAL MOUNTING			BACK-PLATE	TYPE B PPB		LUMINAIRE LED	POLE LOCATION*		SNS	NOTES:
		SIGNAL	LUMINAIRE	POST	MAST-ARM	PED		ø	ARROW		STATION	OFFSET		
(A)	1-A (10')	–	–	TV-1-T	–	SP-1-T	1	6P	→	–	–	–	–	REMOVE POLE AND EQUIPMENT AND REUSE AT (I). COMPLETELY REMOVE & DISPOSE OF FOUNDATION.
(B)	26-4-70	40'	12'	TV-1-T	MAS MAT	SP-1-T	3	4P	←	200W EQUIV.	–	–	Reed Ave	
(C)	19-4-70	30'	12'	SV-2-TB	MAS MAT	–	4	–	–	200W EQUIV.	–	–	Manning Ave	REMOVE AND SALVAGE POLE & EQUIPMENT. COMPLETELY REMOVE AND DISPOSE OF UPPER 3' OF FOUNDATION. RE-USE LED LUMINAIRE & SNS AT (K)
(D)	1-A (10')	–	–	TV-1-T	–	SP-1-T	1	2P	→	–	–	–	–	REMOVE POLE AND EQUIPMENT AND REUSE AT (L). COMPLETELY REMOVE & DISPOSE OF FOUNDATION.
(E)	19-3-70	25'	12'	SV-1-T	MAS MAT	SP-1-T	3	8P	←	200W EQUIV.	–	–	Reed Ave	
(F)	1-A (10')	–	–	TV-1-T	–	SP-1-T	1	8P	→	–	–	–	–	REMOVE POLE AND EQUIPMENT AND REUSE AT (M). COMPLETELY REMOVE & DISPOSE OF FOUNDATION.
(G)	19-4-70	30'	12'	SV-1-T	MAS MAT	SP-1-T	3	6P	←	200W EQUIV.	–	–	Manning Ave	
(H)	1-A (7')	–	–	–	–	TP-2-T		2P / 4P	← / ←	–	–	–	–	REMOVE & SALVAGE POLE & EQUIPMENT. COMPLETELY REMOVE AND DISPOSE OF FOUNDATION.
(I)	1-A (10') (R)	–	–	TV-1-T (R)	–	SP-1-T (R)	1 (R)	6P	→ (N)	–	50+66.67	36.26 L	–	RELOCATE EQUIPMENT FROM (A)
(J)	1-A (10') (N)	–	–	TV-1-T (N)	–	SP-1-T (N)	1 (N)	4P	→ (N)	–	49+51.68	62.59 L	–	
(K)	26-4-100 (N)	45' (N)	15' (N)	SV-1-T (N)	MAS(F=18') (N) MAT (N)	SP-1-T (N)	3 (N)	2P	← (N)	200W EQUIV. (R)	49+36.24	42.81 L	Manning Ave (R)	RE-USE LED LUMINAIRE & SNS FROM (C)
(L)	1-A (10') (R)	–	–	TV-1-T (R)		SP-1-T (R)	1 (R)	2P	→ (N)	–	49+45.55	36.40 R	–	RELOCATE EQUIPMENT FROM (D)
(M)	1-A (10') (R)	–	–	TV-1-T (R)		SP-1-T (R)	1 (R)	2P	← (N)	–	50+37.27	55.95 R	–	RELOCATE EQUIPMENT FROM (F)

Know what's **below.** **Call** before you dig.

90% SUBMITTIAL – NOT FOR CONSTRUCTION

E-5

SCALE: 1" = 20'

0 10 20 30 40

PETERS ENGINEERING GROUP
952 POLLASKY AVENUE
CLOVIS, CALIFORNIA 93612
PHONE (559) 299-1544
WWW.PETERS-ENGINEERING.COM

CITY OF REEDLEY
PUBLIC WORKS DEPARTMENT
1733 9TH STREET
REEDLEY, CALIFORNIA 93654

DESIGN	BY	JR
DRAWN	BY	PNG
CHECKED	BY	JR

ORIGINAL SCALE IN INCHES FOR REDUCED PLANS 0 1 2 3

REED AVENUE IMPROVEMENTS

EQUIPMENT SCHEDULE & NOTES
INTERSECTION OF REED & MANNING AVENUES

DISREGARD PRINTS BEARING EARLIER REVISION DATES →

REVISION DATES (PRELIMINARY STAGE ONLY)

DWG: S:\2014\14-013\Acad\Roundabout\Planset\14-013 E-4.dwg USER: Phil Ginther DATE: Jun 03, 2016 11:17am

SHEET NO.	TOTAL SHEETS
41	52

LICENSED LANDSCAPE ARCHITECT

MAY 31, 2016

DATE

LICENSED LANDSCAPE ARCHITECT
Patrick Boyd, No. 5892
Expires
JULY 31, 2017
MAY 31, 2016
STATE OF CALIFORNIA

PLANT SCHEDULE

TREES	BOTANICAL NAME / COMMON NAME	CONT	SIZE	QTY
	LAGERSTROEMIA INDICA / CRAPE MYRTLE	15 GAL		6
	PISTACIA CHINENSIS 'KEITH DAVEY' / KEITH DAVEY CHINESE PISTACHE	15 GAL		8
	WASHINGTONIA FILIFERA / CALIFORNIA FAN PALM	UNKNOWN	8' H X 10' W	15

SHRUBS	BOTANICAL NAME / COMMON NAME	SIZE	FIELD3	QTY
	ACACIA REDOLENS 'DESERT CARPET' TM / BANK CATCLAW	1 GAL		9
	DIETES BICOLOR / FORTNIGHT LILY	1 GAL		119
	LANTANA MONTEVIDENSIS 'LAVENDER' / LAVENDER LANTANA	1 GAL		53
	LIGUSTRUM JAPONICUM / JAPANESE PRIVET	1 GAL		35
	MUHLENBERGIA CAPILLARIS / PINK MUHLY	1 GAL		240
	RHAPHIOLEPIS INDICA 'BALLERINA' / BALLERINA INDIAN HAWTHORN	1 GAL		11
	ROSMARINUS OFFICINALIS 'HUNTINGTON CARPET' / HUNTINGTON CARPET ROSEMARY	1 GAL		452

SOD/SEED	BOTANICAL NAME / COMMON NAME	CONT	FIELD3	QTY
	CYNODON DACTYLON '419 HYBRID' / BERMUDA GRASS	SOD		1,922

REFERENCE NOTES SCHEDULE

SYMBOL	EROSION CONTROL DESCRIPTION	QTY
	TREE TRIMMING MULCH	180.44 CY

PL-1

HORIZ. SCALE: 1" = 20'

0 10 20 30 40

designlab 252
P.O Box 27616
Fresno, CA 93729
559 472 9966

CITY OF REEDLEY
PUBLIC WORKS DEPARTMENT
1733 9TH STREET
REEDLEY, CALIFORNIA 93654

	BY
DESIGN	PB
DRAWN	KJ
CHECKED	PB

REED AVENUE IMPROVEMENTS

PLANT LEGEND AND NOTES

ORIGINAL SCALE IN INCHES FOR REDUCED PLANS 0 1 2 3

DISREGARD PRINTS BEARING EARLIER REVISION DATES

REVISION DATES (PRELIMINARY STAGE ONLY)

DWG: C:\Users\Konni\appdata\local\temp\AcPublish_19408\14-06-002 LS_100.dwg USER: Konni DATE: Jun 02, 2016 11:02am

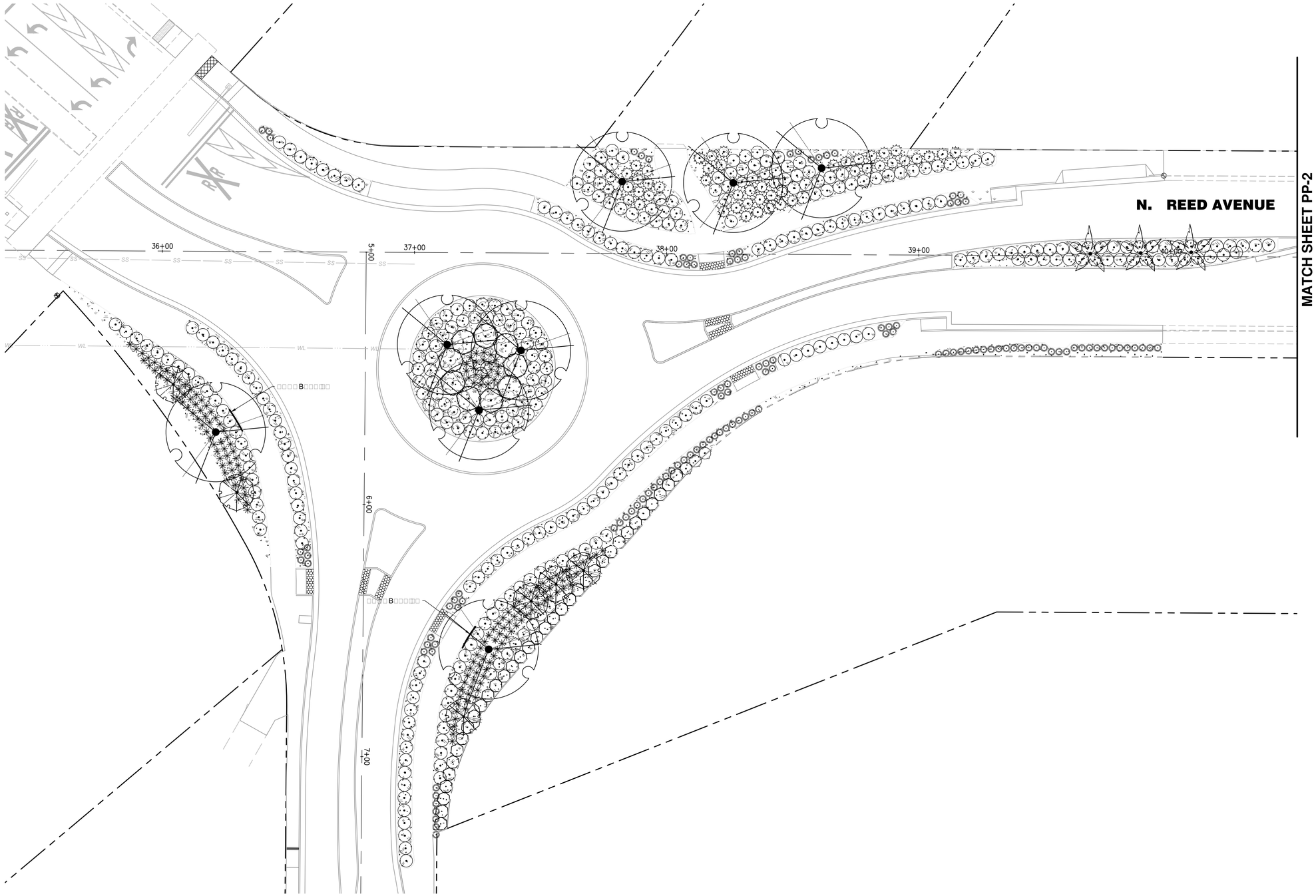

SHEET NO.	TOTAL SHEETS
42	52

LICENSED LANDSCAPE ARCHITECT

MAY 31, 2016

DATE

LICENSED LANDSCAPE ARCHITECT
Patrick Boyd, No. 4892
Expires
JULY 31, 2017
MAY 31, 2016
STATE OF CALIFORNIA

PP-1

HORIZ. SCALE: 1" = 20'

0 10 20 30 40

designlab 252
P.O Box 27616
Fresno, CA 93729
559 472 9966

CITY OF REEDLEY
PUBLIC WORKS DEPARTMENT
1733 9TH STREET
REEDLEY, CALIFORNIA 93654

	BY	
DESIGN	PB	
DRAWN	KJ	
CHECKED	PB	

REED AVENUE IMPROVEMENTS

PLANTING PLAN

ORIGINAL SCALE IN INCHES FOR REDUCED PLANS 0 1 2 3

DISREGARD PRINTS BEARING EARLIER REVISION DATES

REVISION DATES (PRELIMINARY STAGE ONLY)

DWG: C:\Users\Kenni\appdata\local\temp\AcPublish_19408\14-06-002 LS_100.dwg USER: Kenni DATE: Jun 02, 2016 11:02am

SHEET NO.	TOTAL SHEETS
43	52

LICENSED LANDSCAPE ARCHITECT

MAY 31, 2016

DATE

LICENSED LANDSCAPE ARCHITECT
J. Patrick Boyd, No. 2892
Signature
JULY 31, 2017
MAY 31, 2016
Date
STATE OF CALIFORNIA

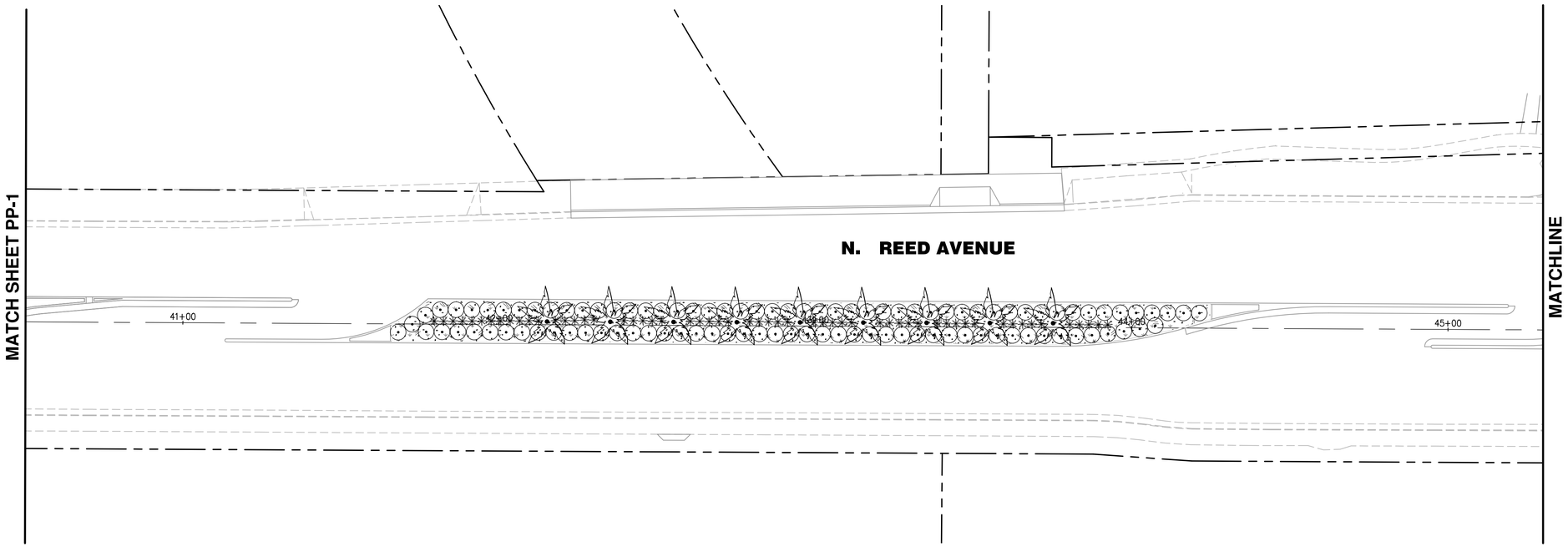

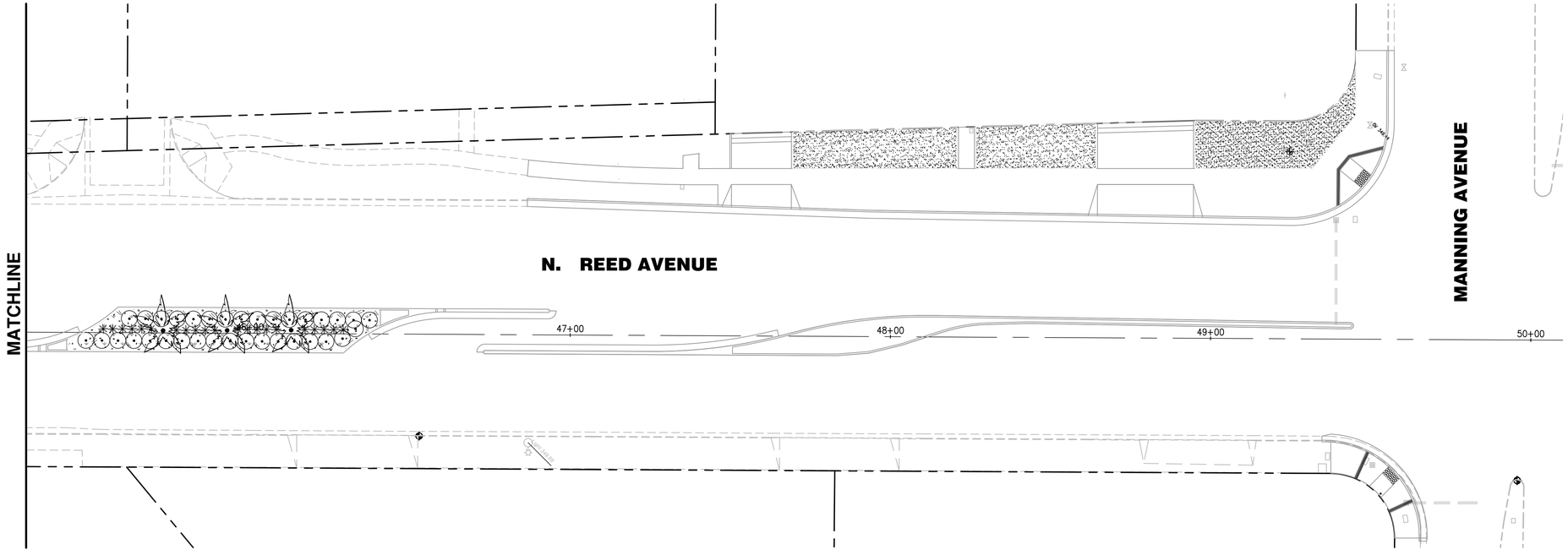

PP-2

HORIZ. SCALE: 1" = 20'

0 10 20 30 40

designlab 252
P.O Box 27616
Fresno, CA 93729
559 472 9966

CITY OF REEDLEY
PUBLIC WORKS DEPARTMENT
1733 9TH STREET
REEDLEY, CALIFORNIA 93654

	BY	
DESIGN	BY	PB
DRAWN	BY	KJ
CHECKED	BY	PB

REED AVENUE IMPROVEMENTS

PLANTING PLAN

ORIGINAL SCALE IN INCHES FOR REDUCED PLANS 0 1 2 3

DISREGARD PRINTS BEARING EARLIER REVISION DATES

REVISION DATES (PRELIMINARY STAGE ONLY)

DWG: C:\Users\Konni\appdata\local\temp\AcPublish_19408\14-06-002 LS_100.dwg USER: Konni DATE: Jun 02, 2016 11:02am

IRRIGATION SCHEDULE

SYMBOL	MANUFACTURER/MODEL/DESCRIPTION	QTY	ARC	PSI	GPM	RADIUS
	TORO 0-T-570Z-6P-PR-COM 8 SERIES TURF SPRAY, 6" POP-UP, WITH BUILT IN-RISER PRESSURE REGULATOR. ALSO INCLUDES THE ZERO FLUSH WIPER SEAL. 1/2" FEMALE-THREADED INLET. WITH CHECK VALVE. PRECISION SERIES SPRAY NOZZLES.	1	60	20	0.10	7'
	TORO 0-T-570Z-6P-PR-COM 8 SERIES TURF SPRAY, 6" POP-UP, WITH BUILT IN-RISER PRESSURE REGULATOR. ALSO INCLUDES THE ZERO FLUSH WIPER SEAL. 1/2" FEMALE-THREADED INLET. WITH CHECK VALVE. PRECISION SERIES SPRAY NOZZLES.	2	210	20	0.33	7'
	TORO 0-T-570Z-6P-PR-COM 8 SERIES TURF SPRAY, 6" POP-UP, WITH BUILT IN-RISER PRESSURE REGULATOR. ALSO INCLUDES THE ZERO FLUSH WIPER SEAL. 1/2" FEMALE-THREADED INLET. WITH CHECK VALVE. PRECISION SERIES SPRAY NOZZLES.	1	180	20	0.26	7'
	TORO 0-T-570Z-6P-PR-COM 10 SERIES TURF SPRAY, 6" POP-UP, WITH BUILT IN-RISER PRESSURE REGULATOR. ALSO INCLUDES THE ZERO FLUSH WIPER SEAL. 1/2" FEMALE-THREADED INLET. WITH CHECK VALVE. PRECISION SERIES SPRAY NOZZLES.	2	180	20	0.48	9'
	TORO 0-T-570Z-6P-PR-COM 12 SERIES TURF SPRAY, 6" POP-UP, WITH BUILT IN-RISER PRESSURE REGULATOR. ALSO INCLUDES THE ZERO FLUSH WIPER SEAL. 1/2" FEMALE-THREADED INLET. WITH CHECK VALVE. PRECISION SERIES SPRAY NOZZLES.	10	180	20	0.70	11'
	TORO 0-T-570Z-6P-PR-COM 12 SERIES TURF SPRAY, 6" POP-UP, WITH BUILT IN-RISER PRESSURE REGULATOR. ALSO INCLUDES THE ZERO FLUSH WIPER SEAL. 1/2" FEMALE-THREADED INLET. WITH CHECK VALVE. PRECISION SERIES SPRAY NOZZLES.	8	90	20	0.34	12'
	TORO 0-T-570Z-6P-PR-COM 15 SERIES TURF SPRAY, 6" POP-UP, WITH BUILT IN-RISER PRESSURE REGULATOR. ALSO INCLUDES THE ZERO FLUSH WIPER SEAL. 1/2" FEMALE-THREADED INLET. WITH CHECK VALVE. PRECISION SERIES SPRAY NOZZLES.	1	150	20	0.92	14'
	TORO 0-T-570Z-6P-PR-COM 15 SERIES TURF SPRAY, 6" POP-UP, WITH BUILT IN-RISER PRESSURE REGULATOR. ALSO INCLUDES THE ZERO FLUSH WIPER SEAL. 1/2" FEMALE-THREADED INLET. WITH CHECK VALVE. PRECISION SERIES SPRAY NOZZLES.	4	180	20	1.10	14'
	TORO 0-T-570Z-6P-PR-COM 15 SERIES TURF SPRAY, 6" POP-UP, WITH BUILT IN-RISER PRESSURE REGULATOR. ALSO INCLUDES THE ZERO FLUSH WIPER SEAL. 1/2" FEMALE-THREADED INLET. WITH CHECK VALVE. PRECISION SERIES SPRAY NOZZLES.	2	90	20	0.53	14'
	BUBBLER-TORO HF05-CKPC PRESSURE COMPENSATING DRIP BUBBLER WITH CHECK VALVE IN 36" LONG ROOT WATERING TUBE	58		20	0.50	1'

SYMBOL	MANUFACTURER/MODEL/DESCRIPTION	QTY
	TORO DZK-700-1-LF 1" LOW FLOW DRIP CONTROL VALVE KIT. WITH 1" IRRITROL 700 ULTRAFLOW INLINE VALVE, TORO Y-FILTER, AND LOW-FLOW PRESSURE REGULATOR AND FITTINGS. 0.25GPM-8GPM.	12
	TORO DZK-700-1-MF 1" MEDIUM-FLOW DRIP CONTROL VALVE KIT. WITH 1" IRRITROL 700 ULTRAFLOW INLINE VALVE, TORO Y-FILTER, AND MEDIUM-FLOW PRESSURE REGULATOR AND FITTINGS. 5GPM-20GPM.	4
2.0 4.0	BUBBLER-TORO LF40-CKPC DRIP BUBBLER PRESSURE COMPENSATING DRIP BUBBLER WITH CHECK VALVE ON FLEX RISER.	919

IRRIGATION SCHEDULE

SYMBOL	MANUFACTURER/MODEL/DESCRIPTION	QTY
	IRRITROL 700 1" ELECTRIC REMOTE CONTROL VALVE	2
	MATCO-NORCA T70S PVC WHITE BALL VALVE FOR SCH 40 AND SCH 80 PIPE, SOLVENT SLIP ENDS WITH "T" HANDLE, SAME SIZE AS MAINLINE. 1/2" TO 4".	8
MV	TORO P220-26-O GLOBE 1-1/2" ELECTRIC, 1", 1-1/2", 2" AND 3" PLASTIC IN-LINE MASTER VALVE. EQUIPPED TO WITHSTAND PRESSURE UP TO 220 PSI. FILTER SCREEN ON 2" AND 3" MODELS. STANDARD SOLENOID. GLOBE BODY STYLE.	1
BF	FEBCO 825Y 1-1/4" REDUCED PRESSURE BACKFLOW PREVENTER IN CAGE AND R30 BLANKET	1
	TORO TWRS (1111) WIRELESS RAIN SENSOR TRANSMITTER AND RECEIVER. MOUNT SENSOR TRANSMITTER AS NOTED OR APPROVED, MOUNT SENSOR RECEIVER NEXT TO THE IRRIGATION CONTROLLER AS NOTED OR APPROVED, USE CONTROLLER POWER OR OPTIONAL TRANSFORMER. ADJUST RAIN SHUTOFF INDEX.	1
CC	TORO TS-24-PSI WITH TS-U2 AND SRRH 24-STATION MODULAR SENTINEL FIELD SATELLITE CONTROLLER, UHF RADIO AND HAND HELD REMOTE. REMOTE AND FLOW SENSOR READY, WITH ET-BASED RUN TIMES. ENCLOSURE: STAINLESS STEEL PEDESTAL MOUNT. WITH	1
FS	TORO TFS 1" 1/2", 3/4", 1", 1-1/2", 2", 3", AND 4" PLASTIC TEE SIZES. EFFECTIVE FLOW MONITORING, EVEN IN FLOWS LESS THAN 5 GPM. COMPATIBLE WITH TORO AND COMPETITIVE CONTROLLERS. IMPELLER-BASED, PVC DESIGN.	1
M	WATER METER 2"	1
	IRRIGATION LATERAL LINE: PVC SCHEDULE 40 3/4" PVC SCHEDULE 40 IRRIGATION PIPE. ONLY LATERAL TRANSITION PIPE SIZES 1" AND ABOVE ARE INDICATED ON THE PLAN, WITH ALL OTHERS BEING 3/4" IN SIZE.	5,247 L.F.
	IRRIGATION LATERAL LINE: PVC SCHEDULE 40 1" PVC SCHEDULE 40 IRRIGATION PIPE. ONLY LATERAL TRANSITION PIPE SIZES 1" AND ABOVE ARE INDICATED ON THE PLAN, WITH ALL OTHERS BEING 3/4" IN SIZE.	178.5 L.F.
	IRRIGATION LATERAL LINE: PVC SCHEDULE 40 1 1/4" PVC SCHEDULE 40 IRRIGATION PIPE. ONLY LATERAL TRANSITION PIPE SIZES 1" AND ABOVE ARE INDICATED ON THE PLAN, WITH ALL OTHERS BEING 3/4" IN SIZE.	6.2 L.F.
	IRRIGATION MAINLINE: PVC SCHEDULE 40 2" PVC SCHEDULE 40 IRRIGATION PIPE.	1,580 L.F.
	PIPE SLEEVE: PVC SCHEDULE 40-4"	624.2 L.F.

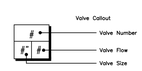

MODEL WATER EFFICIENT LANDSCAPE DATA

MAXIMUM ALLOWED WATER APPLIED (MAWA): 617,061 GALLONS
ESTIMATED TOTAL WATER USED (ETWU): 444,041 GALLONS

I HAVE COMPLIED WITH THE CRITERIA OF THE MODEL WATER EFFICIENT LANDSCAPE ORDINANCE AND APPLIED THEM FOR THE EFFICIENT USE OF WATER IN THE LANDSCAPE AND IRRIGATION DESIGN PLAN.

J. FERRICK BOYD — DATE: Ma::10::2016

SHEET NO.	TOTAL SHEETS
44	52

LICENSED LANDSCAPE ARCHITECT

MAY 31, 2016
DATE

LICENSED LANDSCAPE ARCHITECT — Patrick Boyd, No. 4892 — Expiration Date: JULY 31, 2017 — MAY 31, 2016 — STATE OF CALIFORNIA

IL-1

HORIZ. SCALE: 1" = 20' (0 10 20 30 40)

designlab 252 — P.O Box 27616, Fresno, CA 93729, 559 472 9966

CITY OF REEDLEY
PUBLIC WORKS DEPARTMENT
1733 9TH STREET
REEDLEY, CALIFORNIA 93654

	BY
DESIGN	PB
DRAWN	KJ
CHECKED	PB

REED AVENUE IMPROVEMENTS

IRRIGATION LEGEND

ORIGINAL SCALE IN INCHES FOR REDUCED PLANS: 0 1 2 3

DISREGARD PRINTS BEARING EARLIER REVISION DATES

REVISION DATES (PRELIMINARY STAGE ONLY)

DWG: C:\Users\Konri\appdata\local\temp\AcPublish_19408\14-06-002 LS_L100.dwg USER: Konri DATE: Jun 02, 2016 11:02am

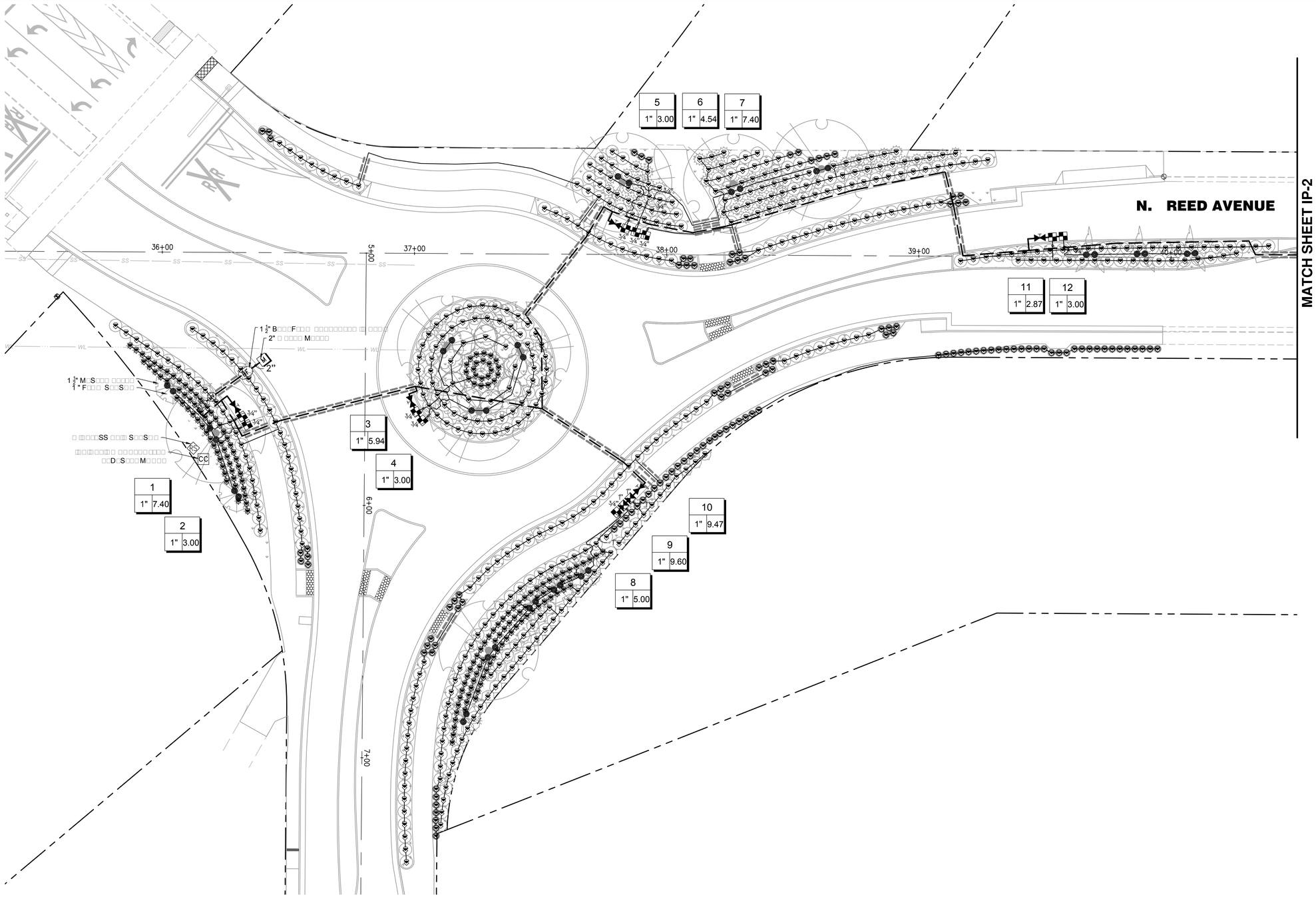

SHEET NO.	TOTAL SHEETS
45	52

LICENSED LANDSCAPE ARCHITECT

MAY 31, 2016

DATE

LICENSED LANDSCAPE ARCHITECT
J. Patrick Boyd, No. 4892
Expires
JULY 31, 2017
MAY 31, 2016
date
STATE OF CALIFORNIA

IP-1

HORIZ. SCALE: 1" = 20'

0 10 20 30 40

designlab 252
P.O Box 27616
Fresno, CA 93729
559 472 9966

CITY OF REEDLEY
PUBLIC WORKS DEPARTMENT
1733 9TH STREET
REEDLEY, CALIFORNIA 93654

	BY
DESIGN	PB
DRAWN	KJ
CHECKED	PB

REED AVENUE IMPROVEMENTS

IRRIGATION PLAN

ORIGINAL SCALE IN INCHES FOR REDUCED PLANS 0 1 2 3

DISREGARD PRINTS BEARING EARLIER REVISION DATES

REVISION DATES (PRELIMINARY STAGE ONLY)

DWG: C:\Users\Konri\appdata\local\temp\AcPublish_19408\14-06-002 IS_100.dwg USER: Konri DATE: Jun 02, 2016 11:02am

SHEET NO.	TOTAL SHEETS
46	52

LICENSED LANDSCAPE ARCHITECT

MAY 31, 2016

DATE

LICENSED LANDSCAPE ARCHITECT
Patrick Boyd, No. 5892
Expires
JULY 31, 2017
MAY 31, 2016
STATE OF CALIFORNIA

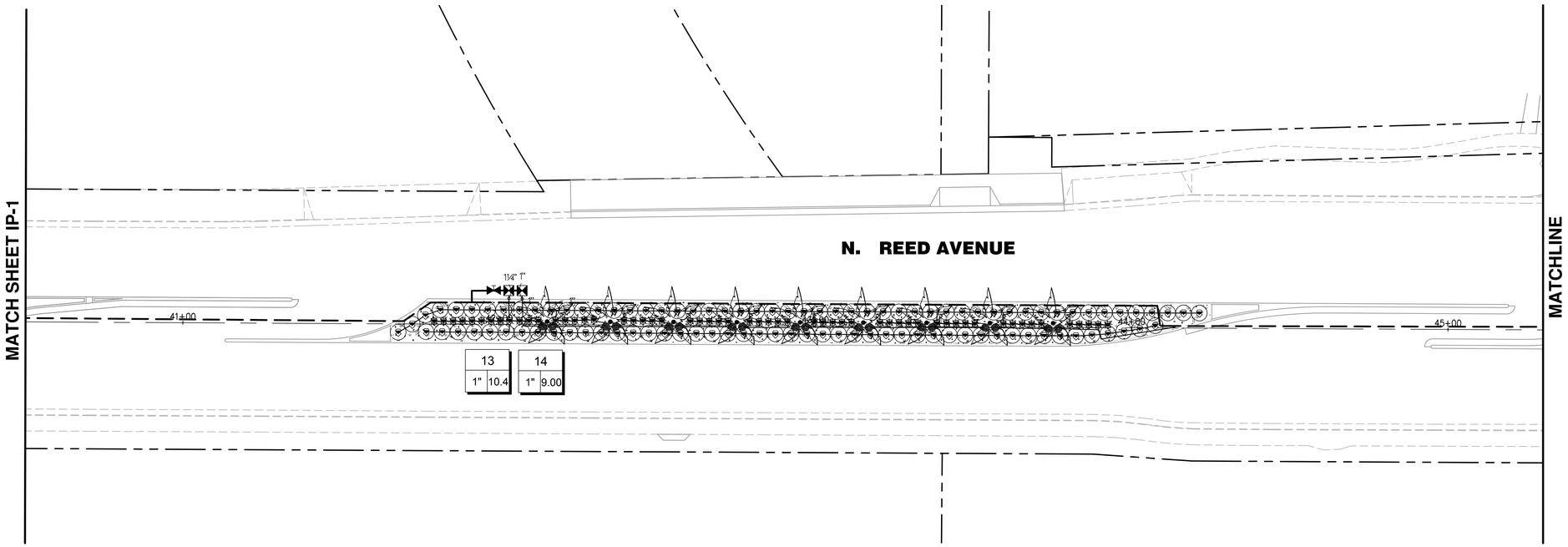

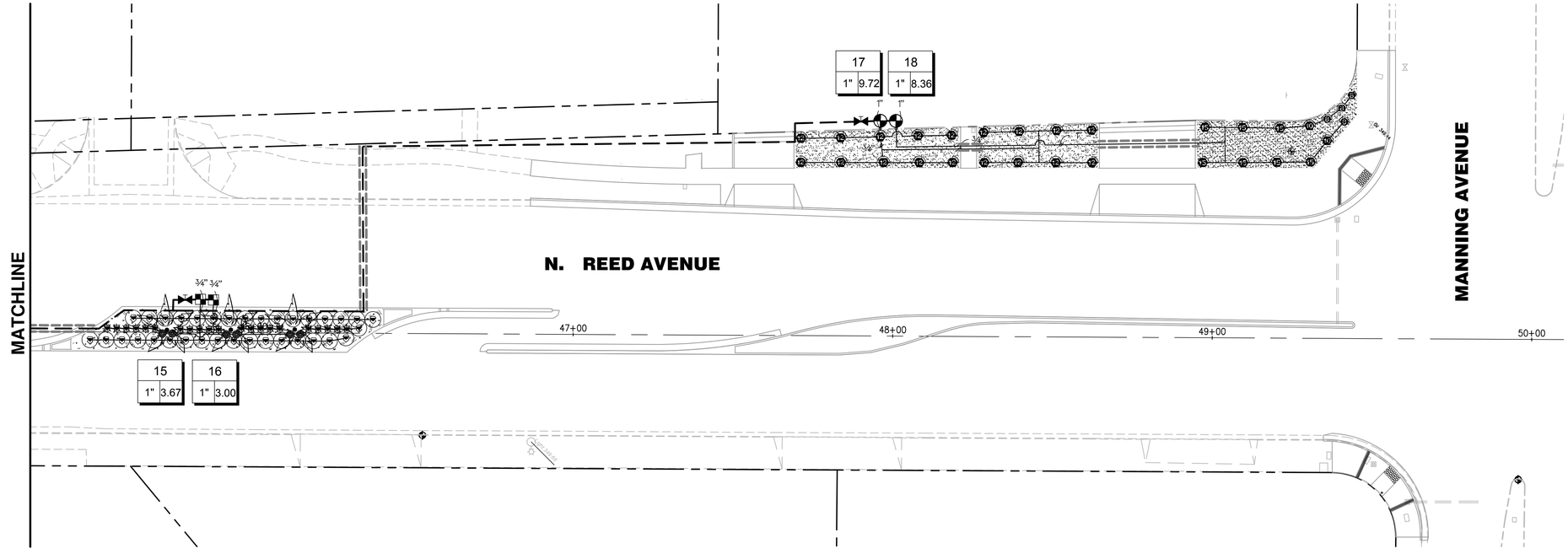

IP-2

HORIZ. SCALE: 1" = 20'

0 10 20 30 40

designlab 252
P.O Box 27616
Fresno, CA 93729
559 472 9966

CITY OF REEDLEY
PUBLIC WORKS DEPARTMENT
1733 9TH STREET
REEDLEY, CALIFORNIA 93654

	BY	
DESIGN	BY	PB
DRAWN	BY	KJ
CHECKED	BY	PB

REED AVENUE IMPROVEMENTS

IRRIGATION PLAN

ORIGINAL SCALE IN INCHES FOR REDUCED PLANS 0 1 2 3

DISREGARD PRINTS BEARING EARLIER REVISION DATES

REVISION DATES (PRELIMINARY STAGE ONLY)

DWG: C:\Users\Konni\appdata\local\temp\AcPublish_19408\14-06-002 LS_100.dwg USER: Konni DATE: Jun 02, 2016 11:02am

SHEET NO.	TOTAL SHEETS
47	52

LICENSED LANDSCAPE ARCHITECT

MAY 31, 2016

DATE

LICENSED LANDSCAPE ARCHITECT
Patrick Boyd, No. 4892
Expires
JULY 31, 2017
MAY 31, 2016
STATE OF CALIFORNIA

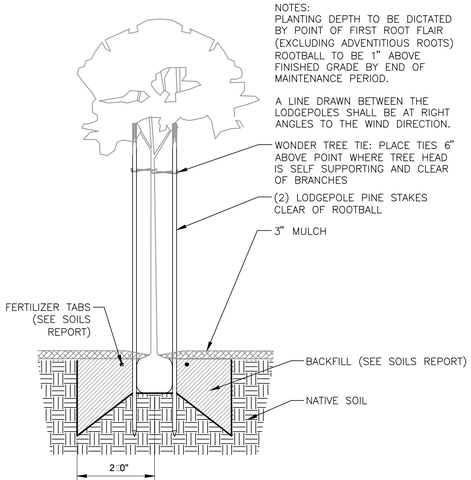

1 TREE PLANTING

1/2" = 1'-0" DL-PL-TRE-05

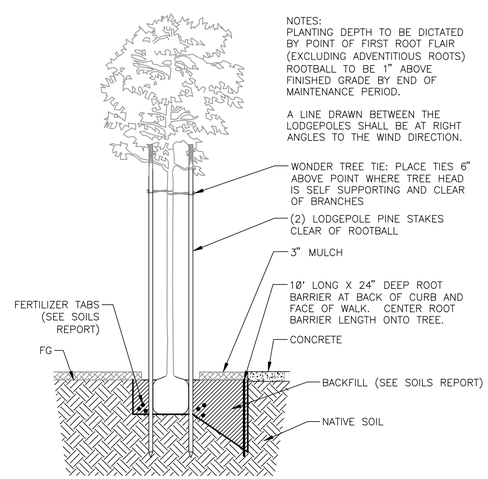

2 TREE PLANTING - PAVEMENT ADJACENT

1/2" = 1'-0" DL-PL-TRE-35

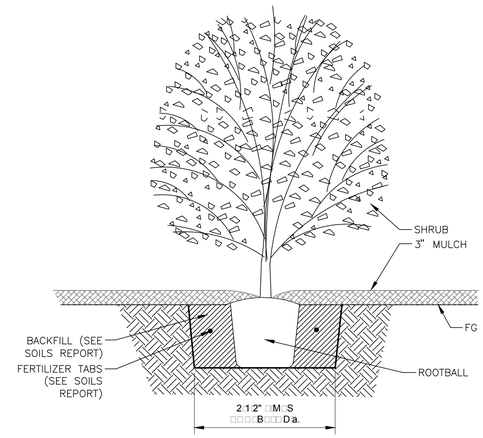

3 SHRUB PLANTING

3/4" = 1'-0" DL-PL-SHR-04

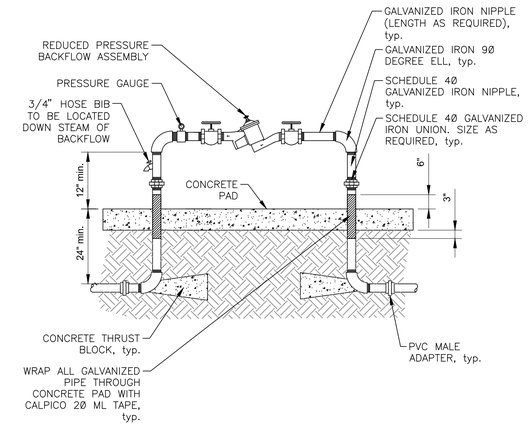

4 BACKFLOW PREVENTER

3/8" = 1'-0" DL-IR-BAC-04

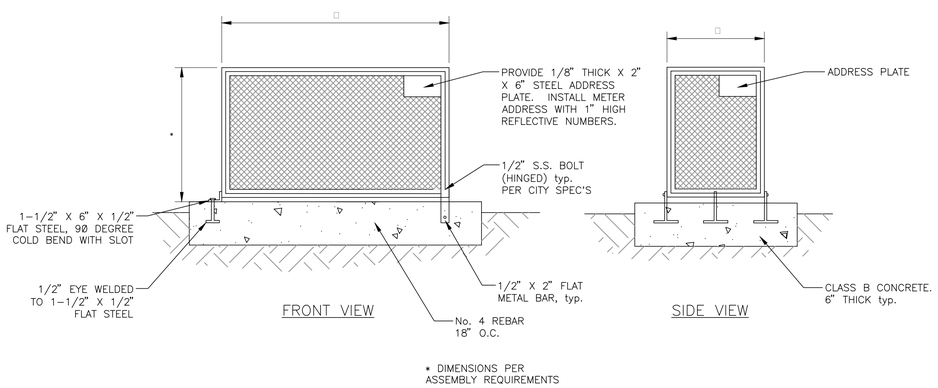

5 BACKFLOW PREVENTER CAGE

3/4" = 1'-0" DL-IR-BAC-01

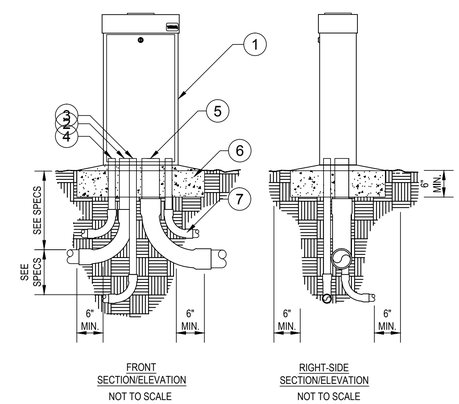

1. SENTINEL – STAINLESS STEEL PEDESTAL CABINET
2. 2" CONDUIT FOR CONDUCTORS
3. 3/4" CONDUIT FOR GROUND
4. 3/4" CONDUIT FOR POWER
5. 2" CONDUIT FOR CONDUCTORS
6. FOOTING
7. 1/2" CONDUIT FOR SENSORS

6 SENTINEL - SS PEDESTAL CABINET

1/2" = 1'-0" DL-IR-IC-03

LD-1

designlab 252
P.O Box 27616
Fresno, CA 93729
559 472 9966

CITY OF REEDLEY
PUBLIC WORKS DEPARTMENT
1733 9TH STREET
REEDLEY, CALIFORNIA 93654

	BY
DESIGN	PB
DRAWN	KJ
CHECKED	PB

REED AVENUE IMPROVEMENTS

LANDSCAPE DETAILS

ORIGINAL SCALE IN INCHES FOR REDUCED PLANS 0 1 2 3

DISREGARD PRINTS BEARING EARLIER REVISION DATES

REVISION DATES (PRELIMINARY STAGE ONLY)

DWG: C:\Users\Konni\appdata\local\temp\AcPublish_19408\14-06-002 LS_100.dwg USER: Konni DATE: Jun 02, 2016 11:02am

SHEET NO.	TOTAL SHEETS
48	52

LICENSED LANDSCAPE ARCHITECT

MAY 31, 2016

DATE

LICENSED LANDSCAPE ARCHITECT
Patrick Boyd, No. 4892
Expires
JULY 31, 2017
MAY 31, 2016
STATE OF CALIFORNIA

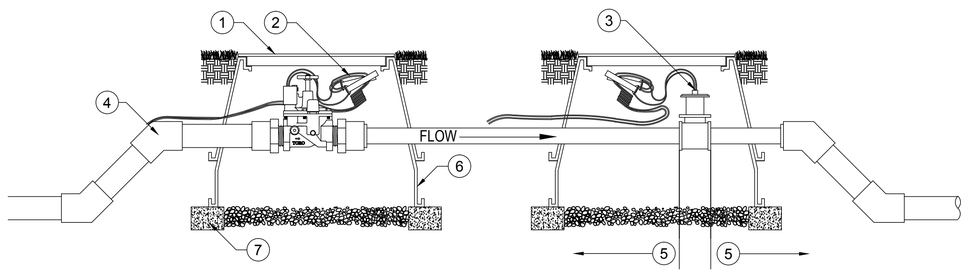

NOT TO SCALE

1. VALVE BOX
2. CONDUCTORS
3. FLOW SENSOR
4. PVC ELL – 45 DEGREE
5. MIN. 10 X PIPE DIA. UPSTREAM
   MIN. 5 X PIPE DIA. DOWNSTREAM
6. EXTENTIONS AS NECESSARY
7. BRICK SUPPORT

1 MASTER VALVE - FLOW SENSOR

3/4" = 1'-0" DL-IR-SEN-01

NOTE:
ALL SOLVENT WELD PIPE SHALL BE SNAKED INTO TRENCHES TO ALLOW FOR EXPANSION & CONTRACTION.

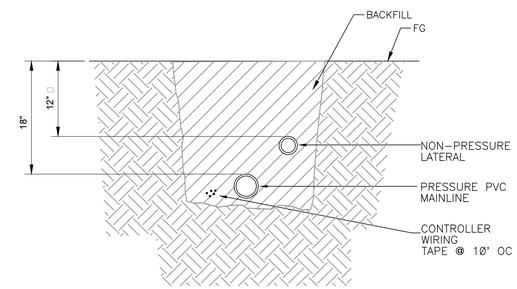

* MAY VARY BY JURISDICTION

2 TRENCHING

1" = 1'-0" DL-IR-PIP-02

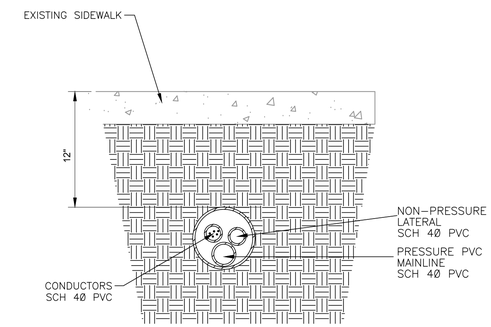

3 IRRIGATION SLEEVE

1 1/2" = 1'-0" DL-IR-PIP-03

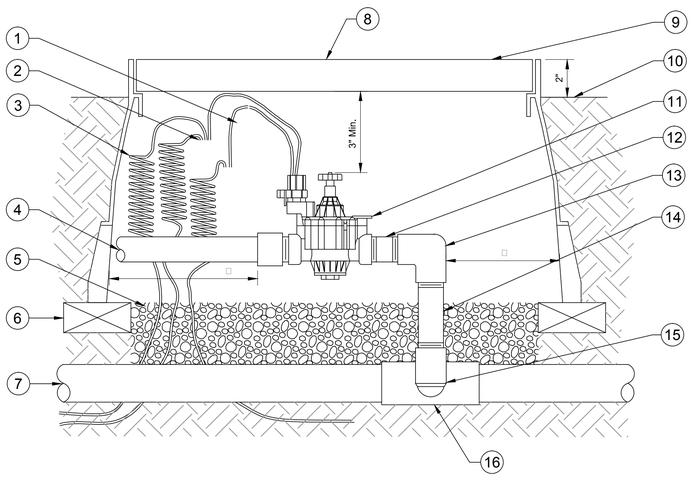

1. INTERNAL IDENTIFICATION TAG
2. WATERPROOF CONNECTION
3. 30" OF COILED WIRE
4. PVC LATERAL PIPE
5. 3" Min. DEPTH OF 3/4" GRAVEL
6. BRICK SUPPORT
7. PVC MAINLINE PIPE
8. VALVE BOX IDENTIFICATION TAG
9. PLASTIC VALVE BOX
10. FG
11. REMOTE CONTROL VALVE
12. PVC SCH 80 NIPPLE
13. PVC SCH 40 ELL
14. PVC SCH 80 NIPPLE (LENGTH AS REQUIRED)
15. SCH 80 NIPPLE (2" LENGTH, HIDDEN) AND SCH 40 ELL
16. PVC SCH 40 TEE OR ELL

NOTES:
* 5 X THE DIAMETER OF THE PIPE

4 REMOTE CONTROL VALVE - GLOBE

3" = 1'-0" DL-IR-VAL-08

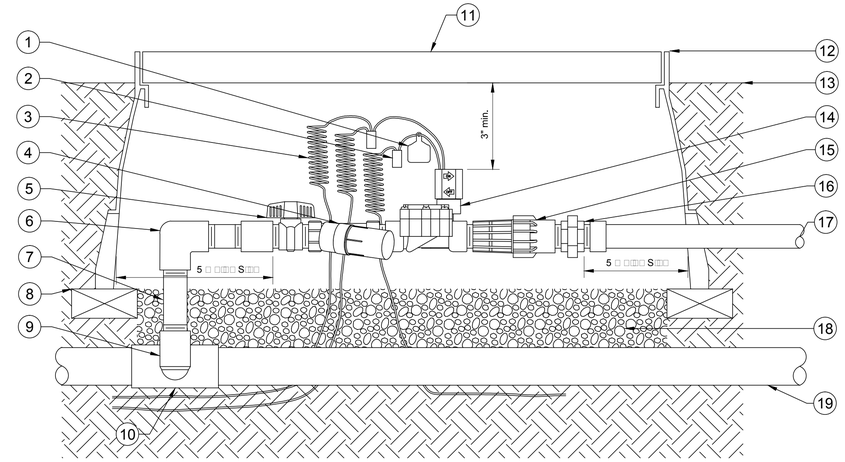

1. INTERNAL IDENTIFICATION TAG
2. WATERPROOF CONNECTION
3. 30" OF COILED WIRE
4. INLINE MESH FILTER (SEE SCHEDULE FOR MESH SIZE)
5. BALL VALVE (LINE SIZE)
6. SCH 40 ELL
7. SCH 80 NIPPLE (LENGTH AS REQUIRED) typ.
8. BRICK SUPPORT
9. SCH 80 NIPPLE (2" LENGTH, HIDDEN) AND SCH 40 ELL
10. SCH 40 TEE OR ELL
11. VALVE BOX IDENTIFICATION TAG
12. PLASTIC VALVE BOX
13. FG
14. REMOTE CONTROL VALVE
15. PRESSURE REGULATOR
16. UNION
17. LATERAL TO DRIP
18. 3/4" GRAVEL. 3" DEPTH min.
19. MAINLINE

5 DRIP ZONE VALVE

3" = 1'-0" DL-IR-VAL-30

LD-2

designlab 252
P.O Box 27616
Fresno, CA 93729
559 472 9966

CITY OF REEDLEY
PUBLIC WORKS DEPARTMENT
1733 9TH STREET
REEDLEY, CALIFORNIA 93654

	BY
DESIGN	PB
DRAWN	KJ
CHECKED	PB

REED AVENUE IMPROVEMENTS

LANDSCAPE DETAILS

ORIGINAL SCALE IN INCHES FOR REDUCED PLANS 0 1 2 3

DISREGARD PRINTS BEARING EARLIER REVISION DATES

REVISION DATES (PRELIMINARY STAGE ONLY)

DWG: C:\Users\Kconn\appdata\local\temp\AcPublish_19408\14-06-002 LS_100.dwg USER: Konni DATE: Jun 02, 2016 11:02am

SHEET NO.	TOTAL SHEETS
49	52

LICENSED LANDSCAPE ARCHITECT

MAY 31, 2016

DATE

LICENSED LANDSCAPE ARCHITECT
Patrick Boyd, No. 4892
Expires
JULY 31, 2017
MAY 31, 2016
STATE OF CALIFORNIA

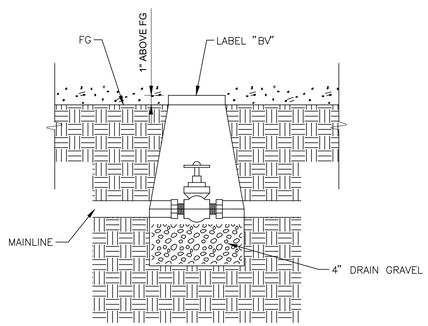

1 BALL VALVE

1 1/2" = 1'-Ø" DL-IR-VAL-Ø6

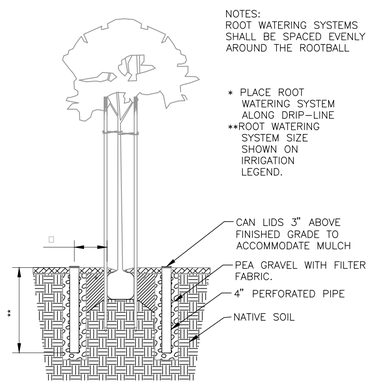

2 ROOT WATERING SYSTEM PLACEMENT

3/8" = 1'-Ø" DL-IR-SPR-DEEP-Ø6

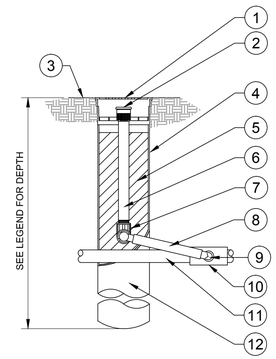

1. 4" GRATE
2. BUBBLER (SEE IRRIGATION LEGEND)
3. FG
4. FILTER FABRIC
5. PEA GRAVEL
6. 1/2" PVC SCHEDULE 8Ø NIPPLE
7. 1/2" 9Ø DEGREE ELL
8. 12" SWING ASSEMBLY
9. 1/2" MALE NPT INLET
10. PVC SCHEDULE 4Ø TEE OR ELL
11. LATERAL PIPE
12. PERFORATED PIPE CANISTER

3 BUBBLER IN ROOT WATERING SYSTEM

1 1/2" = 1'-Ø" DL-IR-SPR-DEEP-Ø3

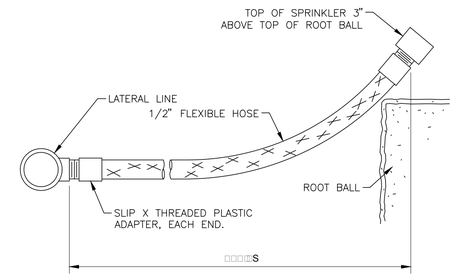

NOTE:
NO NATIVE SOIL ON TOP OF ROOT BALL

4 SHRUB BUBBLER

6" = 1'-Ø" DL-IR-SPR-BUBB-Ø5

NOTES:
1. INSTALL SPRINKLER HEAD FLUSH OR SLIGHTLY ABOVE FINISH GRADE IN TURF AREAS.
2. INSTALL SPRINKLER HEAD 24" AWAY FROM ANY HARDSCAPE SURFACE.

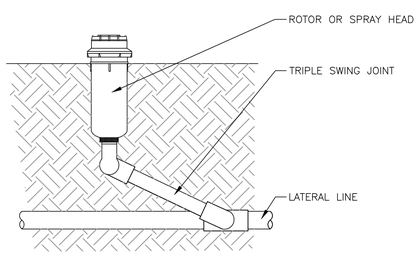

5 POP UP SPRAY HEAD IN TURF

3" = 1'-Ø" DL-IR-SPR-ROTO-Ø2

LD-3

designlab 252
P.O Box 27616
Fresno, CA 93729
559 472 9966

CITY OF REEDLEY
PUBLIC WORKS DEPARTMENT
1733 9TH STREET
REEDLEY, CALIFORNIA 93654

	BY
DESIGN	PB
DRAWN	KJ
CHECKED	PB

REED AVENUE IMPROVEMENTS

IRRIGATION PLAN

ORIGINAL SCALE IN INCHES FOR REDUCED PLANS 0 1 2 3

DISREGARD PRINTS BEARING EARLIER REVISION DATES →

REVISION DATES (PRELIMINARY STAGE ONLY)

DWG: C:\Users\Konni\appdata\local\temp\AcPublish_19408\14-06-002 LS_100.dwg USER: Konni DATE: Jun 02, 2016 11:02am

LEGEND & KEYNOTES:

ROAD CLOSURE

CONTRACTOR TO PROVIDE ACCESS FOR LOCAL TRAFFIC ONLY

DETOUR ROUTE

NOTE TO CONTRACTOR:

1. CONTRACTOR TO SUBMIT DETOUR & CONSTRUCTION ZONE TRAFFIC CONTROL PLANS FOR REVIEW & APPROVAL BY CITY ENGINEER PRIOR TO PLACING TRAFFIC CONTROL DEVICES. ALL TRAFFIC CONTROL DEVICE PLACEMENT SHALL BEGIN CONFORMANCE WITH THE 2014 CALIFORNIA MUTCD & 2010 STATE STANDARD PLANS.

REGISTERED CIVIL ENGINEER

MAY 31, 2016

DATE

REGISTERED PROFESSIONAL ENGINEER DAVID M. PETERS No. 52685 EXP: 12/31/16 CIVIL STATE OF CALIFORNIA

SHEET NO. 50 TOTAL SHEETS 52

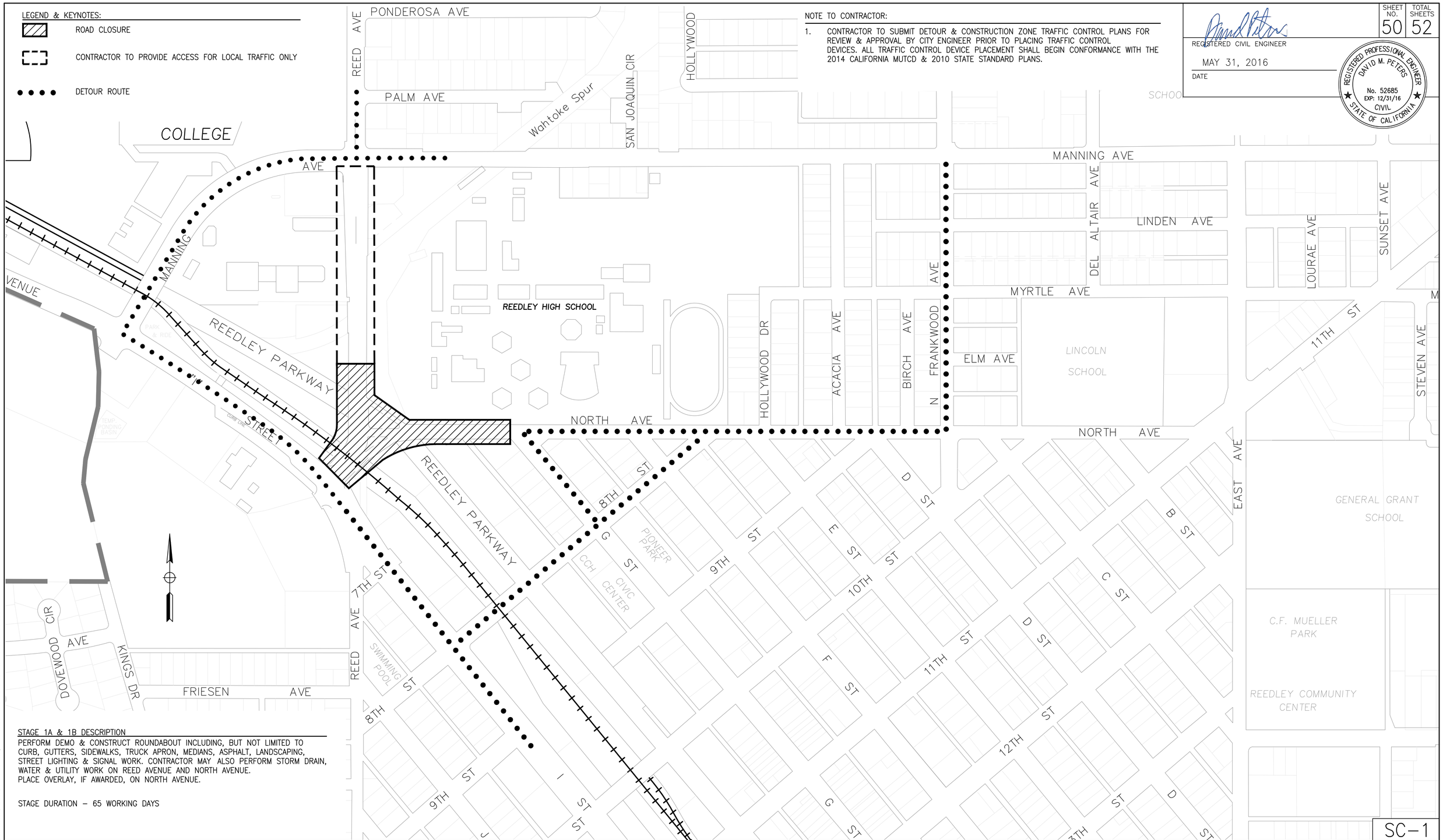

STAGE 1A & 1B DESCRIPTION

PERFORM DEMO & CONSTRUCT ROUNDABOUT INCLUDING, BUT NOT LIMITED TO CURB, GUTTERS, SIDEWALKS, TRUCK APRON, MEDIANS, ASPHALT, LANDSCAPING, STREET LIGHTING & SIGNAL WORK. CONTRACTOR MAY ALSO PERFORM STORM DRAIN, WATER & UTILITY WORK ON REED AVENUE AND NORTH AVENUE. PLACE OVERLAY, IF AWARDED, ON NORTH AVENUE.

STAGE DURATION – 65 WORKING DAYS

SC–1

NOT TO SCALE

PETERS ENGINEERING GROUP
952 POLLASKY AVENUE
CLOVIS, CALIFORNIA 93612
PHONE (559) 299-1544
WWW.PETERS-ENGINEERING.COM

CITY OF REEDLEY
PUBLIC WORKS DEPARTMENT
1733 9TH STREET
REEDLEY, CALIFORNIA 93654

	BY
DESIGN	PNG
DRAWN	PNG
CHECKED	DMP

REED AVENUE IMPROVEMENTS

CONSTRUCTION – STAGE 1A & 1B

ORIGINAL SCALE IN INCHES FOR REDUCED PLANS 0 1 2 3

DISREGARD PRINTS BEARING EARLIER REVISION DATES

REVISION DATES (PRELIMINARY STAGE ONLY)

DWG: S:\2014\14-013\Acad\Roundabout\Planset\14-013 SC-1.dwg USER: Phil Gintner DATE: Jun 03, 2016 11:18am

LEGEND & KEYNOTES:

WORK ZONE

CONTRACTOR TO PROVIDE ACCESS FOR RHODES PETROLEUM AND MCDONALDS DRIVE THROUGH EXIT ONLY.

DETOUR ROUTE

NOTE TO CONTRACTOR:

1. CONTRACTOR TO SUBMIT DETOUR & CONSTRUCTION ZONE TRAFFIC CONTROL PLANS FOR REVIEW & APPROVAL BY CITY ENGINEER PRIOR TO PLACING TRAFFIC CONTROL DEVICES. ALL TRAFFIC CONTROL DEVICE PLACEMENT SHALL BEGIN CONFORMANCE WITH THE 2014 CALIFORNIA MUTCD & 2010 STATE STANDARD PLANS.

REGISTERED CIVIL ENGINEER

MAY 31, 2016

DATE

REGISTERED PROFESSIONAL ENGINEER DAVID M. PETERS No. 52685 EXP: 12/31/16 CIVIL STATE OF CALIFORNIA

SHEET NO. 51 TOTAL SHEETS 52

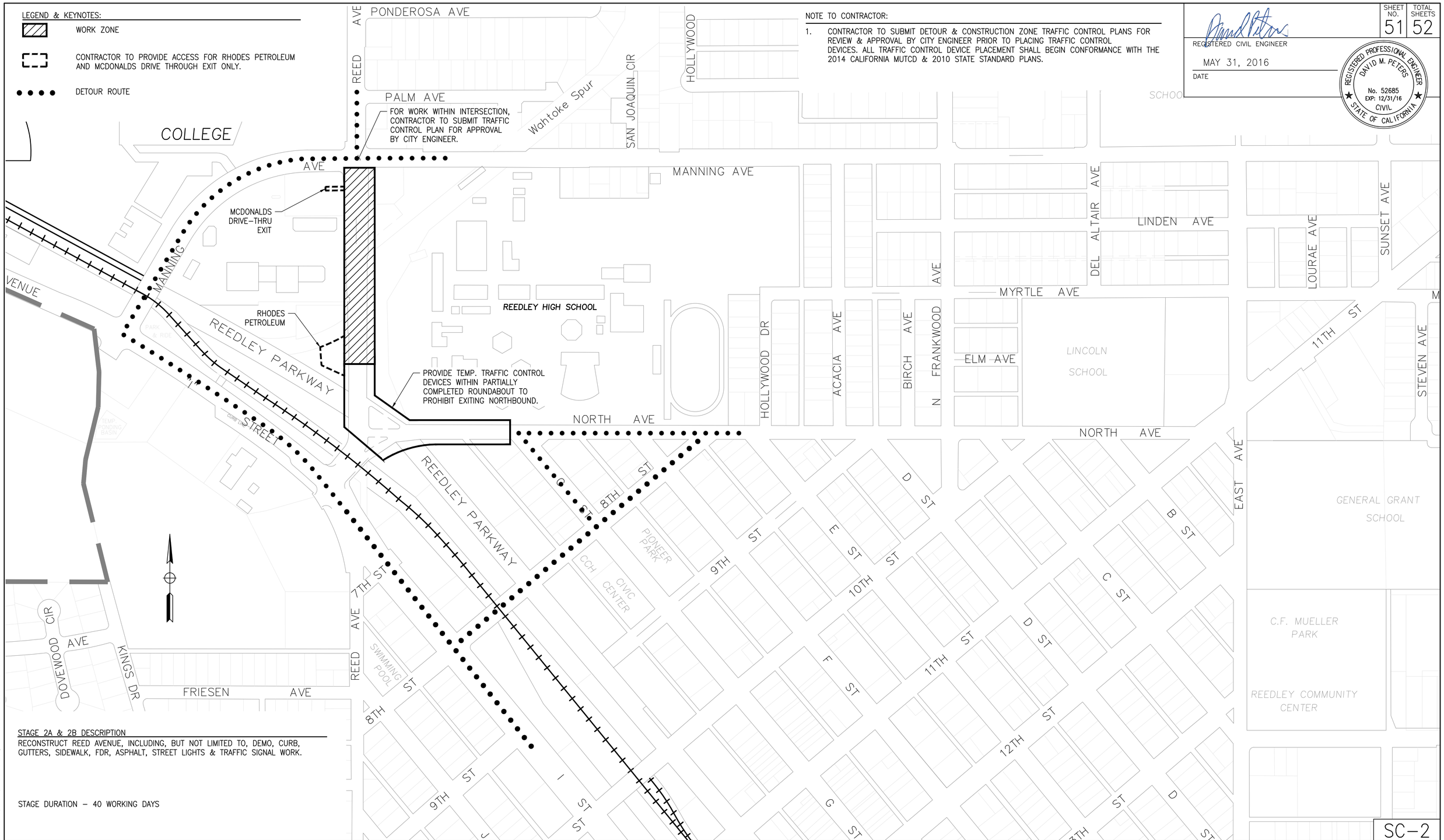

STAGE 2A & 2B DESCRIPTION

RECONSTRUCT REED AVENUE, INCLUDING, BUT NOT LIMITED TO, DEMO, CURB, GUTTERS, SIDEWALK, FDR, ASPHALT, STREET LIGHTS & TRAFFIC SIGNAL WORK.

STAGE DURATION – 40 WORKING DAYS

SC-2

NOT TO SCALE

PETERS ENGINEERING GROUP
952 POLLASKY AVENUE
CLOVIS, CALIFORNIA 93612
PHONE (559) 299-1544
WWW.PETERS-ENGINEERING.COM

CITY OF REEDLEY
PUBLIC WORKS DEPARTMENT
1733 9TH STREET
REEDLEY, CALIFORNIA 93654

	BY
DESIGN	PNG
DRAWN	PNG
CHECKED	DMP

REED AVENUE IMPROVEMENTS
CONSTRUCTION – STAGE 2A & 2B

ORIGINAL SCALE IN INCHES FOR REDUCED PLANS 0 1 2 3

DISREGARD PRINTS BEARING EARLIER REVISION DATES

REVISION DATES (PRELIMINARY STAGE ONLY)

DWG: S:\2014\14-013\Acad\Roundabout\Planset\14-013 SC-2.dwg USER: Phil Ginther DATE: Jun 03, 2016 11:19am

LEGEND & KEYNOTES:

WORK ZONE – MAINTAIN TWO WAY TRAFFIC CONTROL AT ALL TIMES, MIN. 2–11' TRAVEL LANES.

NOTE TO CONTRACTOR:

1. CONTRACTOR TO SUBMIT DETOUR & CONSTRUCTION ZONE TRAFFIC CONTROL PLANS FOR REVIEW & APPROVAL BY CITY ENGINEER PRIOR TO PLACING TRAFFIC CONTROL DEVICES. ALL TRAFFIC CONTROL DEVICE PLACEMENT SHALL BEGIN CONFORMANCE WITH THE 2014 CALIFORNIA MUTCD & 2010 STATE STANDARD PLANS.

REGISTERED CIVIL ENGINEER

MAY 31, 2016

DATE

REGISTERED PROFESSIONAL ENGINEER DAVID M. PETERS No. 52685 EXP: 12/31/16 CIVIL STATE OF CALIFORNIA

SHEET NO.	TOTAL SHEETS
52	52

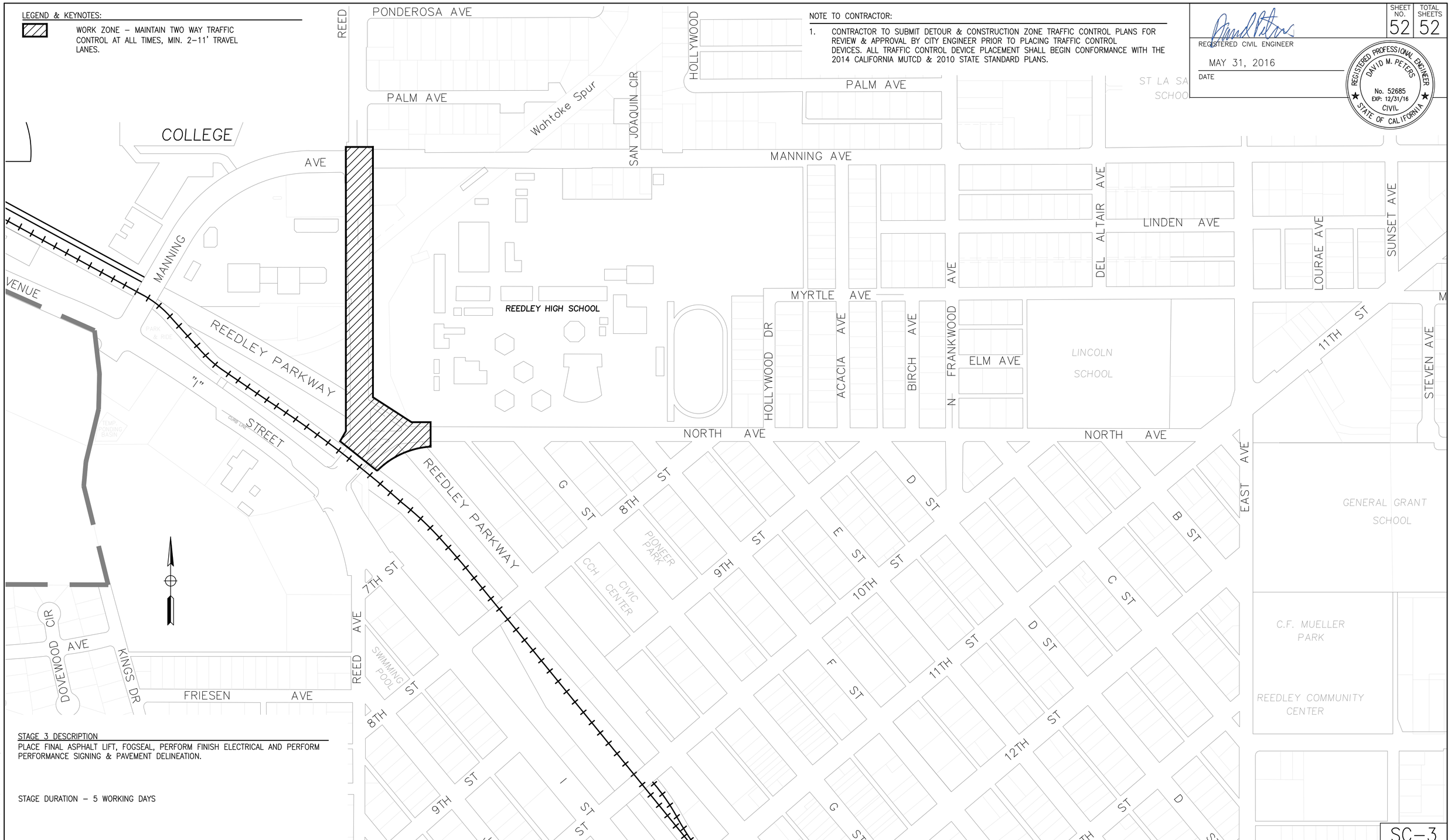

STAGE 3 DESCRIPTION

PLACE FINAL ASPHALT LIFT, FOGSEAL, PERFORM FINISH ELECTRICAL AND PERFORM PERFORMANCE SIGNING & PAVEMENT DELINEATION.

STAGE DURATION – 5 WORKING DAYS

SC–3

NOT TO SCALE

PETERS ENGINEERING GROUP
952 POLLASKY AVENUE
CLOVIS, CALIFORNIA 93612
PHONE (559) 299-1544
WWW.PETERS-ENGINEERING.COM

CITY OF REEDLEY
PUBLIC WORKS DEPARTMENT
1733 9TH STREET
REEDLEY, CALIFORNIA 93654

	BY
DESIGN	PNG
DRAWN	PNG
CHECKED	DMP

REED AVENUE IMPROVEMENTS
CONSTRUCTION – STAGE 3

ORIGINAL SCALE IN INCHES FOR REDUCED PLANS 0 1 2 3

DISREGARD PRINTS BEARING EARLIER REVISION DATES

REVISION DATES (PRELIMINARY STAGE ONLY)

DWG: S:\2014\14-013\Acad\Roundabout\Plotset\14-013 SC-3.dwg USER: Phil Ginther DATE: Jun 03, 2016 11:19am