STANDARD PLANS

January, 2007
(updated 1/11/08)

Table of Contents

PLAN TITLE	PLAN NO.
SEWER	
Sewer Service Lateral	S-1
Sewer Manhole	S-2
Sewer Drop Manhole	S-3
Sewer Clean-Out	S-4
Manhole Frame and Cover	S-5
Sewer Monitoring Manhole	S-6
Installation of Carrier Pipe in Jacked Steel Casing	S-7
Sand and Grease Interceptor	S-8
Trench Detail for Cover Less than 48"	S-9
Sewer Lateral Service Connection into Existing Sewer Mains	S-10
STORM DRAIN	
Type "A" Storm Drainage Inlet	SD-1A
Type "A" Storm Drainage Inlet Throat Form and Frame	SD-1B
Type "B" Storm Drainage Inlet	SD-2A
Type "B" Inlet Frame and Grate	SD-2B
Storm Drain Manhole	SD-3
Sand Trap	SD-4
Temporary Ponding Basin	SD-5
Erosion Control	SD-6
STREET	
Local Residential Street	ST-1A
Local Residential Street Within Reedley Specific Plan Area	ST-1A.1
Local Industrial Street	ST-1B
Arterial or Collector Street	ST-2A
Major Arterial & Arterial Street (4-lane divided)	ST-2B
Arterial Street (4-lane divided) Within Reedley Specific Plan Area	ST-2B.1
Collector Street 2-lane Divided	ST-2C
Collector Street 2-lane Divided Within Reedley Specific Plan Area	ST-2C.1
Frontage Road	ST-2D
Alley Structural Section - Residential	ST-3
Secondary and Emergency / Maintenance Access Road	ST-3B
Curb, Gutter and Sidewalk	ST-4A
Curb, Gutter and Sidewalk Within Reedley Specific Plan Area	ST-4A.1
12' Radius Curb Return and Sidewalk with Wheelchair Ramp	ST-4B
15' Radius Curb Return and Sidewalk with Wheelchair Ramp (Specific Plan)	ST-4B.1
20' Radius Curb Return and Sidewalk with Wheelchair Ramp (Specific Plan)	ST-4B.2
20' Radius Curb Return and Sidewalk with Wheelchair Ramp	ST-4C

Table of Contents

PLAN TITLE	PLAN NO.
25' Radius Curb Return and Sidewalk with Wheelchair Ramp (Specific Plan)....	ST-4C.1
30' Radius Curb Return and Sidewalk with Wheelchair Ramp	ST-4D
Residential Driveway Approach	ST-5A
Residential Driveway Approach Within Reedley Specific Plan Area	ST-5A.1
Residential Driveway Approach Handicap Accessible Sidewalk.....	ST-5A.2
Commercial/Industrial Driveway Approach.....	ST-5B
ADA Compliant Alley Approach	ST-5C
Alley Approach (Areas with planting strips)	ST-5D
Alley Approach (where no sidewalk exist)	ST-5E
Concrete Valley Gutter	ST-6
Standard Cul-de-sac	ST-7A
Standard Cul-de-sac Within Reedley Specific Plan Area	ST-7A.1
Knuckle Curve	ST-7B
Temporary Timber Barricade	ST-8A
Removable Chain Barricade	ST-8B
Survey Monument Details	ST-9
Street Sign Location	ST-10A
Sign Installation	ST-10B
Street Name Sign	ST-10C
Street Structural Sections	ST-11
Trench Backfill and Surface Replacement	ST-12
Trash Bin Enclosure	ST-13A
Trash Bin Enclosure Gate Details	ST-13B
Tree Well Standard	ST-14
Sidewalk Trough Drain	ST-15A
Sidewalk Drain Pipe	ST-15B
Chain Link Fence	ST-16
Chain Link Fence Drive and Personal Gates	ST-17
Typical Lot Drainage - Residential	ST-18A
Lot Line Grading Standard	ST-18B
Typical Residential Lot Fence Location	ST-20A
Single Family Typical Residential Setbacks (w/in Reedley Specific Plan Area) .	ST-20B
Steel Guard Post Detail	ST-21A
Quick Release Steel Bollard	ST-21B
Standard Speed Hump	ST-22
Standard Mailbox Post Relocation Detail	ST-23
Street Light Standard	ST-24A
Street Light Standard (Located Within Planter Strip)	ST-24A.1
Street Light Standard Pull Box	ST-24B
Street Light and Electrical Systems Splicing Details	ST-24B.1
Street Light Placement	ST-24C
Street Light Pole Numbering	ST-24D
Historic Light Standard (w/in Reedley Specific Plan Area).....	ST-24E
Underground Utilities Locations	ST-25

Table of Contents

PLAN TITLE	PLAN NO.
Utility Box Reinforcement Detail	ST-26
Bus Turnout w/17' Landscape Right-of-way	ST-27A
Bus Turnout w/greater than 24' Landscape Right-of-way	ST-27B

WATER

Fire Hydrant Assembly (Wet Barrel)	W-1
Water Valve	W-2
One-inch Water Service & Assembly Street Installation	W-3A
One-inch Water Service & Assembly Alley Installation	W-3B
Two-inch Water Service Assembly	W-3C
Concrete Thrust Blocks	W-4
2" Blow-off Assembly	W-5
Special Construction Requirements for Sewer & Water Separation	W-6
Concrete Blanket for Sewer and Water Separation	W-7
Water Well Abandonment	W-8
2" Air-Vacuum Valve	W-9
Water Sampling Station	W-10
Double Check Valve Backflow Prevention Installation	W-11
Backflow Installation Reduced Pressure (R.P.) Valve	W-12
Construction Requirements for Lowering Water Mains	W-13

LANDSCAPE

Landscape and Irrigation Legend	L-1
Conduit and Irrigation Piping Trenching and Backfill	L-2
Potable Water Protection	L-3
Remote Control Valves	L-4
Electric Controller & Service, Oscillating Head and Triple Swing Joint	L-5
Various Irrigation Heads	L-6
Quick Coupler Valve Detail	L-7
Parkway and Median Section Details	L-8
Tree Painting and Irrigation Details	L-9A
Shrub Planting and Irrigation Details	L-9B
Irrigation Sleevend(s) Details	L-10
Concrete Mow Strip Details	L-11
Typical Sight Distance Requirements for Controlled Intersection with Landscaping	L-12
Landscaping on Major Arterials and Major Collector Streets	L-13A
Typical Street Side Yard Setbacks & Fencing (w/in Reedley Specific Plan Area)	L-13A.1
Large Street Trees	L-13B
Medium Street Trees	L-13C
Small Street Trees	L-13D
Landscape Irrigation Backflow and Controller Enclosure	L-14

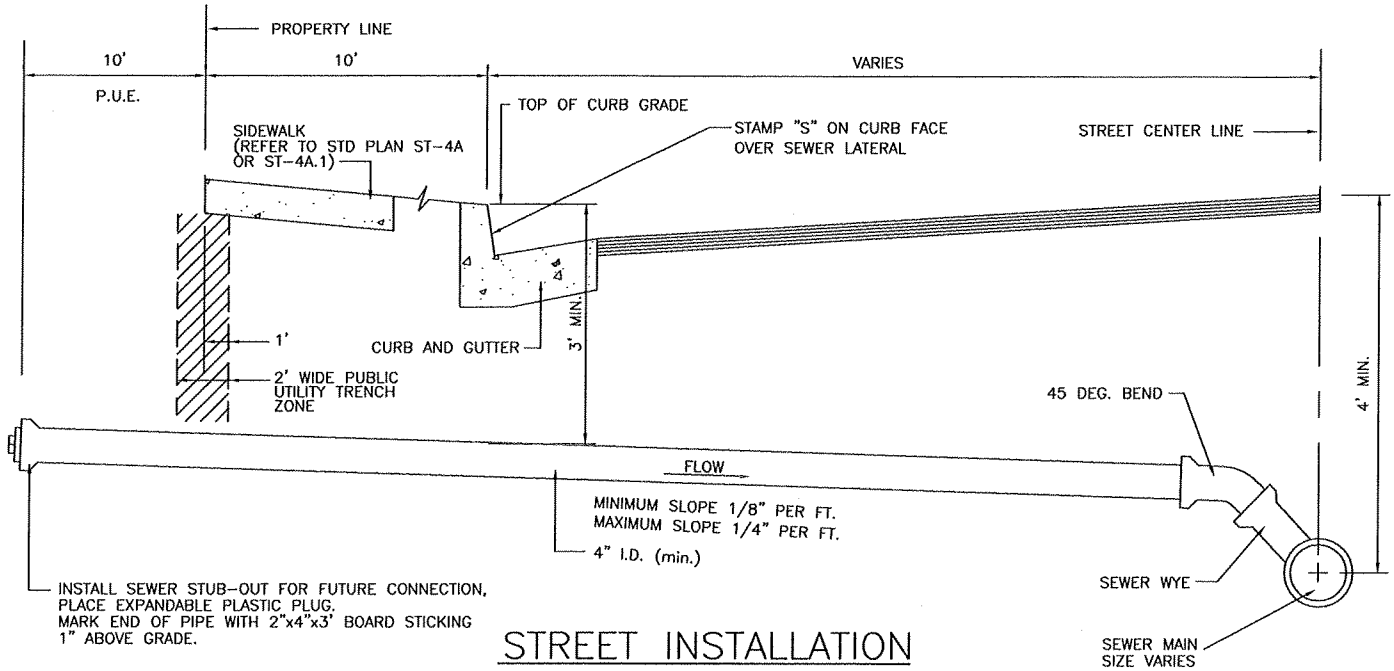

STREET INSTALLATION

NOTES:

1. SEWER SERVICE LATERAL WITHIN A RESIDENTAL SUBDIVISION SHALL BE LOCATED 10 FT OFF FROM CENTER OF LOT.
2. NOT USED.
3. LATERALS LOCATED SO NOT TO CONFLICT WITH PUBLIC UTILITIES.
4. P.U.E. = PUBLIC UTILITY EASEMENT
5. SEWER SERVICE LATERAL TO BE OF SAME MATERIAL AS SEWER MAIN TO WHICH CONNECTED.

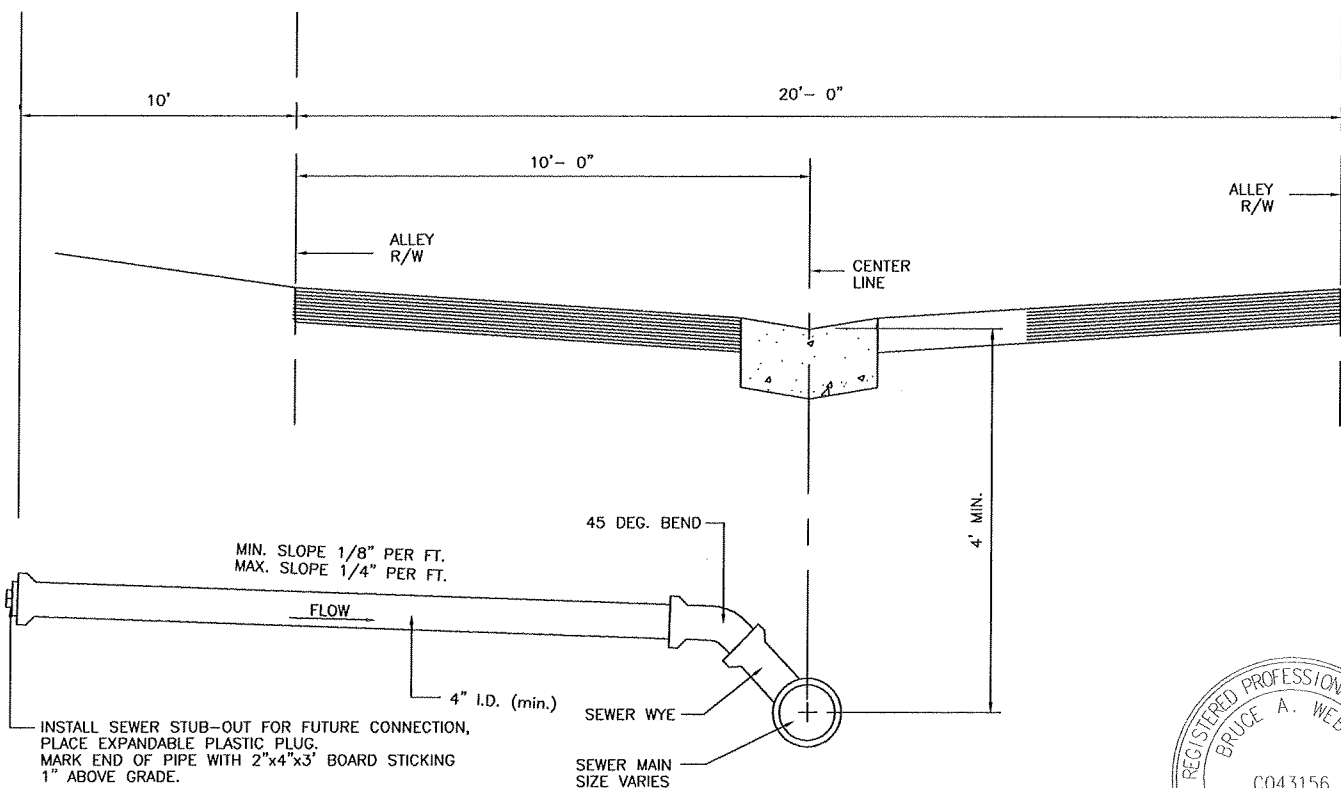

ALLEY INSTALLATION

REGISTERED PROFESSIONAL ENGINEER
BRUCE A. WEBBER
C043156
Exp. 3-31-2008
CIVIL
STATE OF CALIFORNIA

NOT TO SCALE

SEWER SERVICE LATERAL	CITY ENGINEER PUBLIC WORKS DEPARTMENT ENGINEERING DIVISION	8-8-06 PLAN APPROVAL DATE
	REVISIONS: JAN 2004 AUG 2006	CITY OF REEDLEY S-1

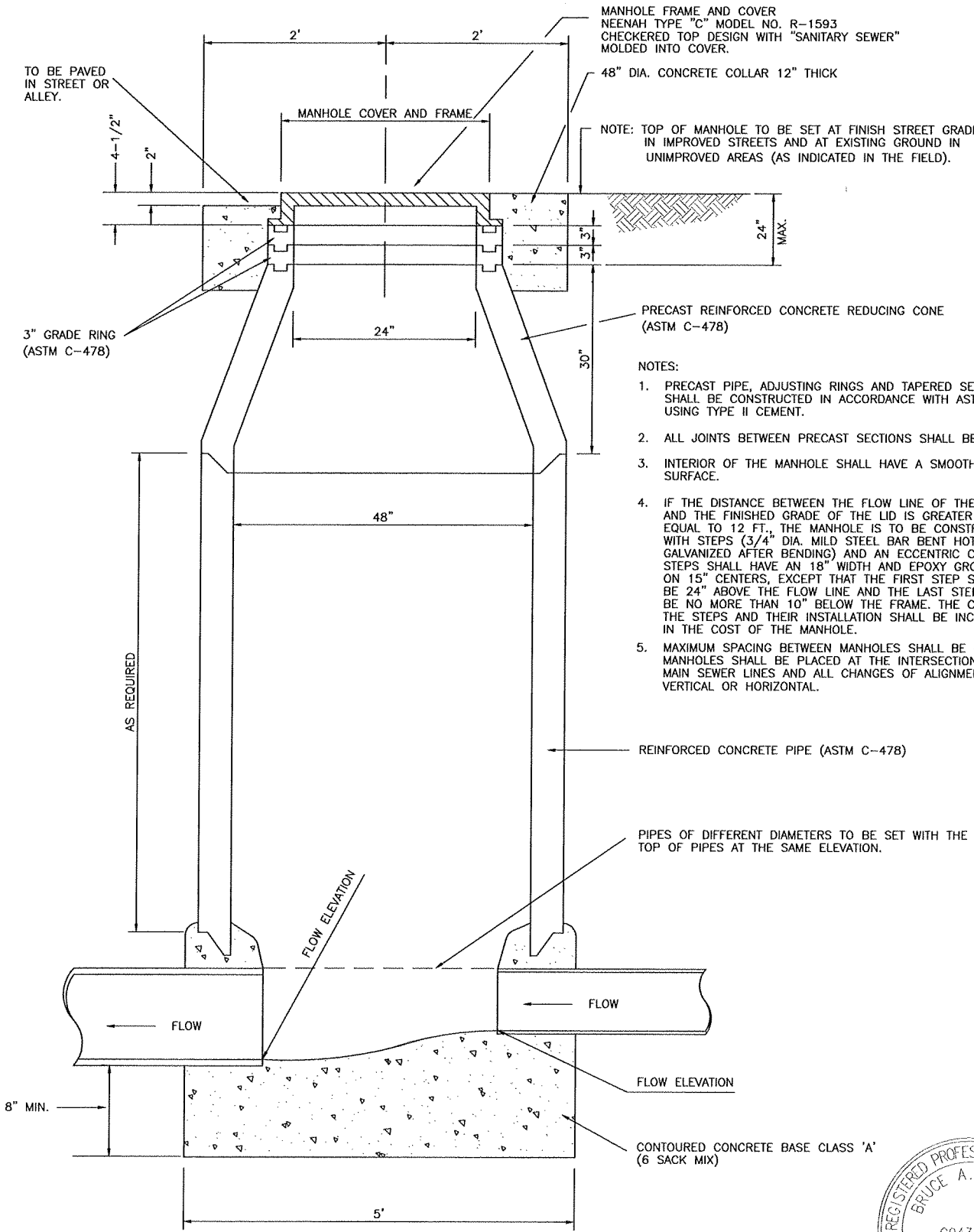

NOTES:

1. PRECAST PIPE, ADJUSTING RINGS AND TAPERED SECTIONS SHALL BE CONSTRUCTED IN ACCORDANCE WITH ASTM C-478 USING TYPE II CEMENT.
2. ALL JOINTS BETWEEN PRECAST SECTIONS SHALL BE MORTARED.
3. INTERIOR OF THE MANHOLE SHALL HAVE A SMOOTH TROWELED SURFACE.
4. IF THE DISTANCE BETWEEN THE FLOW LINE OF THE MANHOLE AND THE FINISHED GRADE OF THE LID IS GREATER THAN OR EQUAL TO 12 FT., THE MANHOLE IS TO BE CONSTRUCTED WITH STEPS (3/4" DIA. MILD STEEL BAR BENT HOT AND GALVANIZED AFTER BENDING) AND AN ECCENTRIC CONE. STEPS SHALL HAVE AN 18" WIDTH AND EPOXY GROUTED ON 15" CENTERS, EXCEPT THAT THE FIRST STEP SHALL BE 24" ABOVE THE FLOW LINE AND THE LAST STEP SHALL BE NO MORE THAN 10" BELOW THE FRAME. THE COST OF THE STEPS AND THEIR INSTALLATION SHALL BE INCLUDED IN THE COST OF THE MANHOLE.
5. MAXIMUM SPACING BETWEEN MANHOLES SHALL BE 600 L.F.. MANHOLES SHALL BE PLACED AT THE INTERSECTION OF ALL MAIN SEWER LINES AND ALL CHANGES OF ALIGNMENT EITHER VERTICAL OR HORIZONTAL.

REGISTERED PROFESSIONAL ENGINEER
BRUCE A. WEBBER
C043156
Exp. 3-31-2006
CIVIL
STATE OF CALIFORNIA

NOT TO SCALE

SEWER MANHOLE	CITY ENGINEER PUBLIC WORKS DEPARTMENT ENGINEERING DIVISION	12-8-05 PLAN APPROVAL DATE
	REVISIONS: DEC. 2005	CITY OF REEDLEY S-2

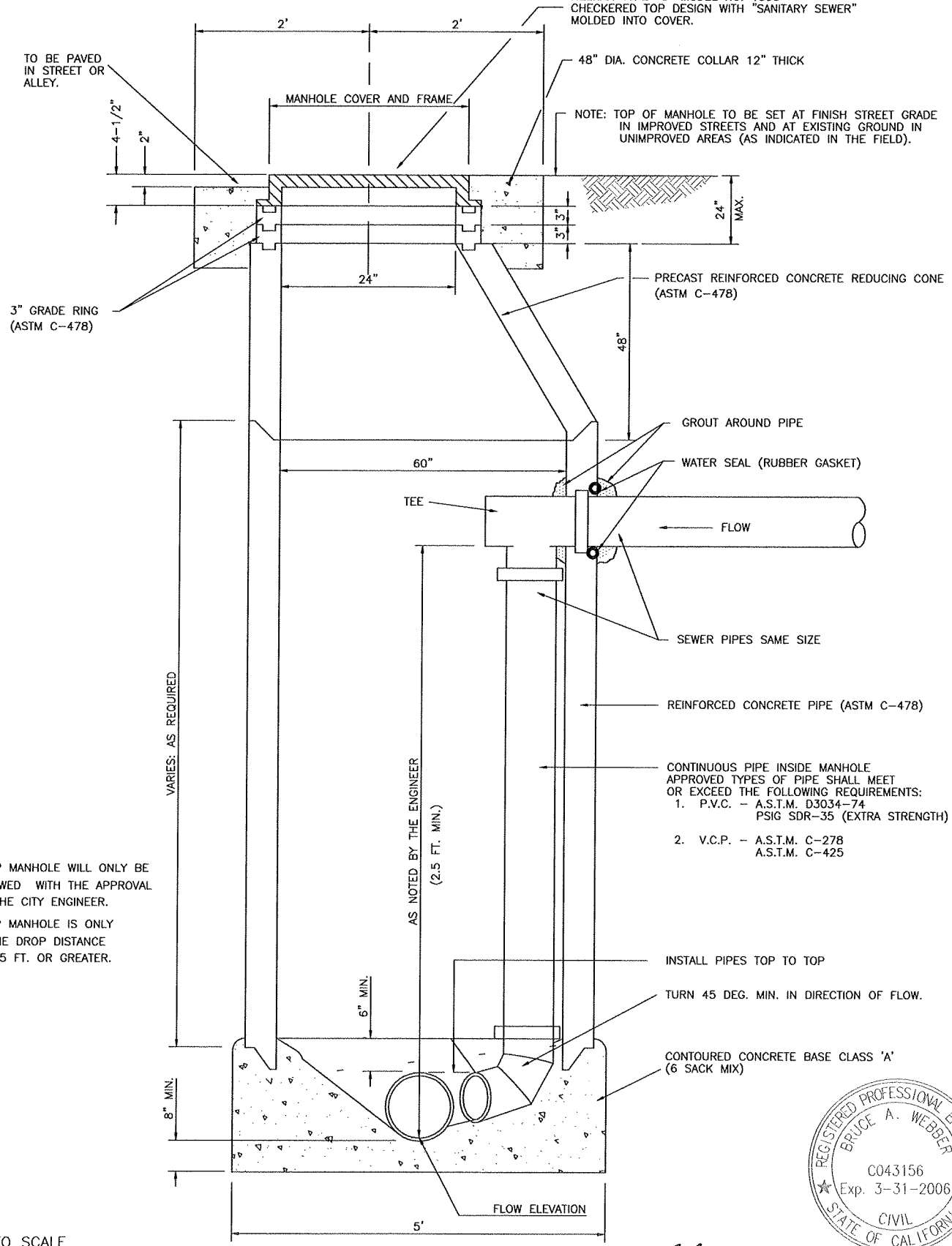

NOT TO SCALE

Bruce Webber 12-8-05

CITY ENGINEER
PUBLIC WORKS DEPARTMENT
ENGINEERING DIVISION

PLAN APPROVAL DATE

SEWER DROP MANHOLE

REVISIONS:

DEC. 2005

CITY OF REEDLEY

S-3

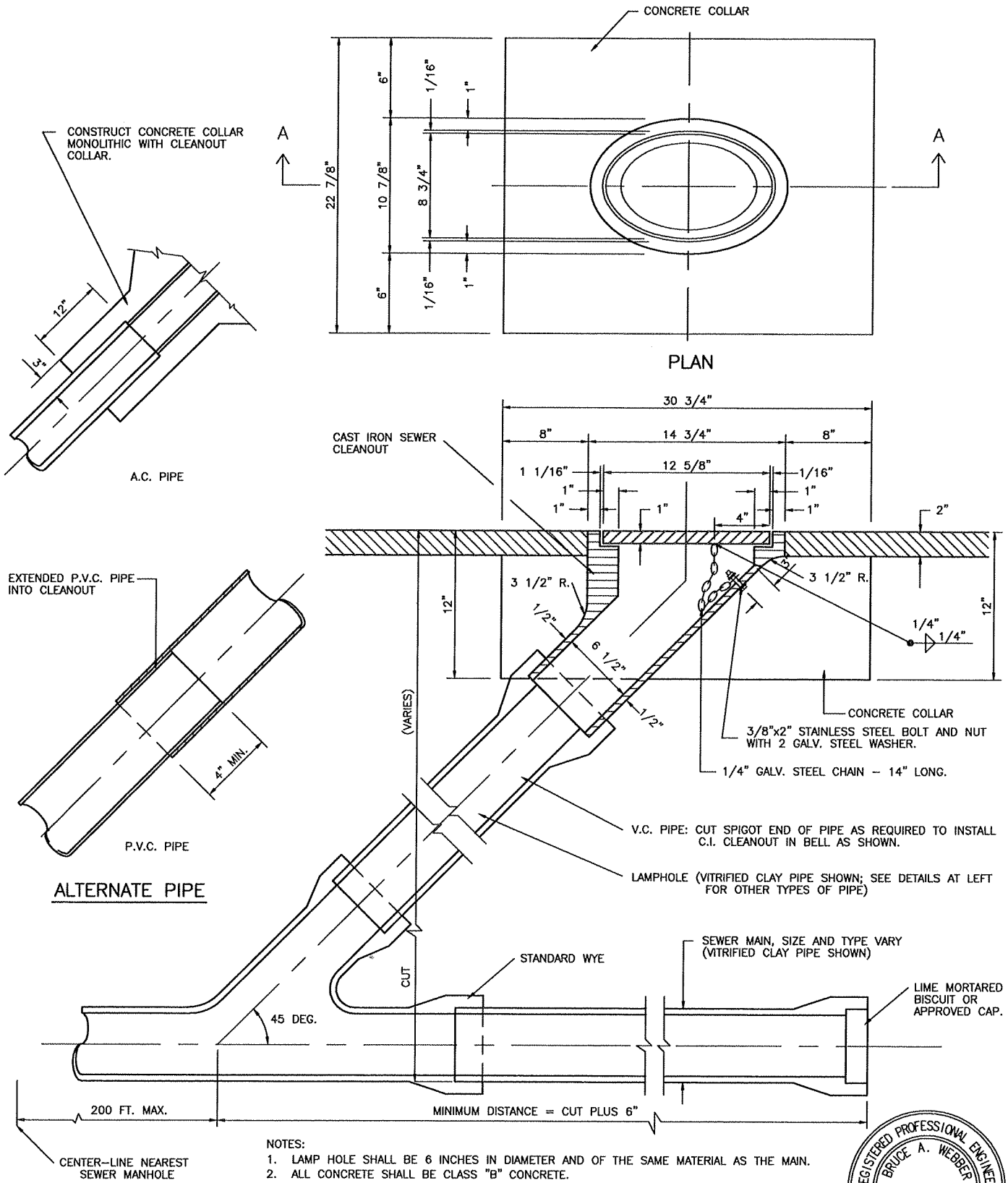

NOTES:
1. LAMP HOLE SHALL BE 6 INCHES IN DIAMETER AND OF THE SAME MATERIAL AS THE MAIN.
2. ALL CONCRETE SHALL BE CLASS "B" CONCRETE.

SECTION "AA"

REGISTERED PROFESSIONAL ENGINEER
BRUCE A. WEBBER
C043156
EXPIRES: 3/31/2006
CIVIL
STATE OF CALIFORNIA

NOT TO SCALE

SEWER CLEANOUT	CITY ENGINEER PUBLIC WORKS DEPARTMENT ENGINEERING DIVISION 12-5-05 PLAN APPROVAL DATE	
	REVISIONS: NOV. 2005	CITY OF REEDLEY S-4

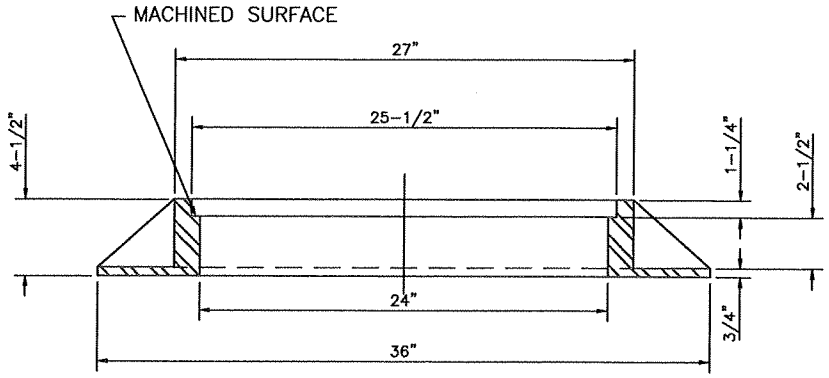

SECTION "AA"

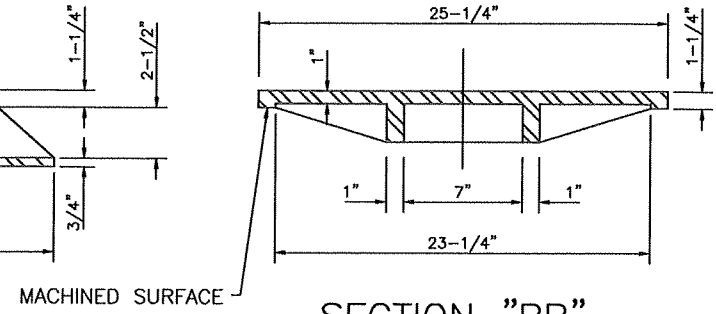

SECTION "BB"

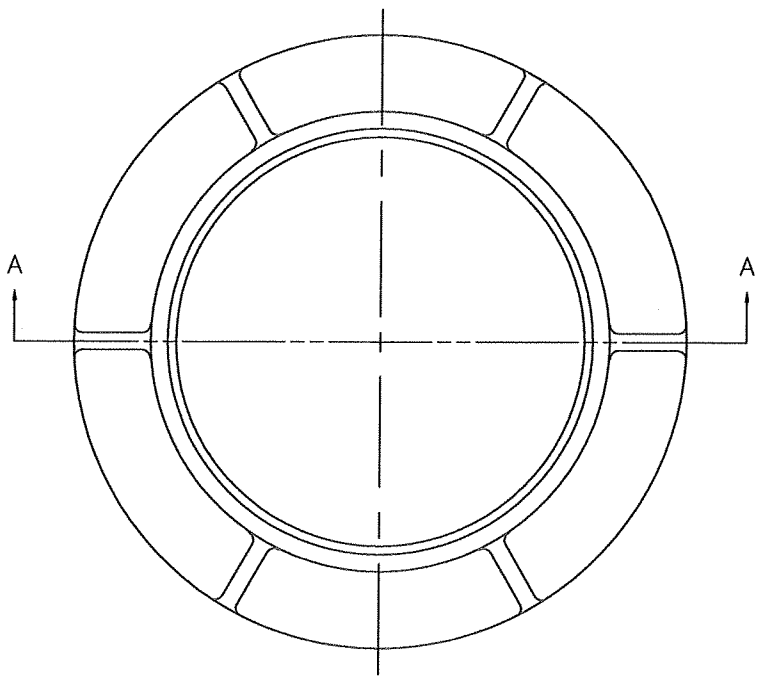

PLAN

MANHOLE FRAME

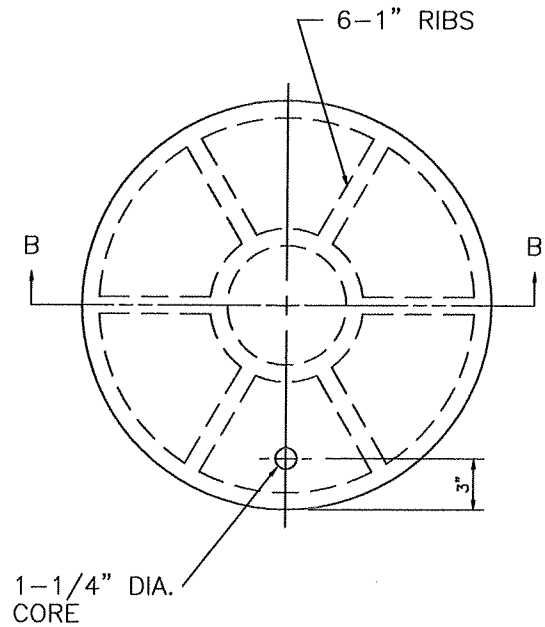

PLAN

MANHOLE COVER

NOTES:

1. ALL DIMENSIONS ARE FINISHED DIMENSIONS.
2. MATERIAL SHALL BE CAST IRON.
3. FRAME AND COVER TO BE CONSTRUCTED IN ACCORDANCE WITH A.S.T.M. DESIGNATION A48, CLASS 25.
4. MANHOLE COVER DESIGN, AS A MINIMUM, IS TO HAVE THE WORDS "STORM SEWER" OR "SANITARY SEWER" MOLDED INTO THE COVER.

NOT TO SCALE

REGISTERED PROFESSIONAL ENGINEER
BRUCE A. WEBBER
C043156
EXPIRES: 3/31/2006
CIVIL
STATE OF CALIFORNIA

MANHOLE FRAME AND COVER	CITY ENGINEER PUBLIC WORKS DEPARTMENT ENGINEERING DIVISION	12-5-05 PLAN APPROVAL DATE
	REVISIONS: NOV. 2005	CITY OF REEDLEY S-5

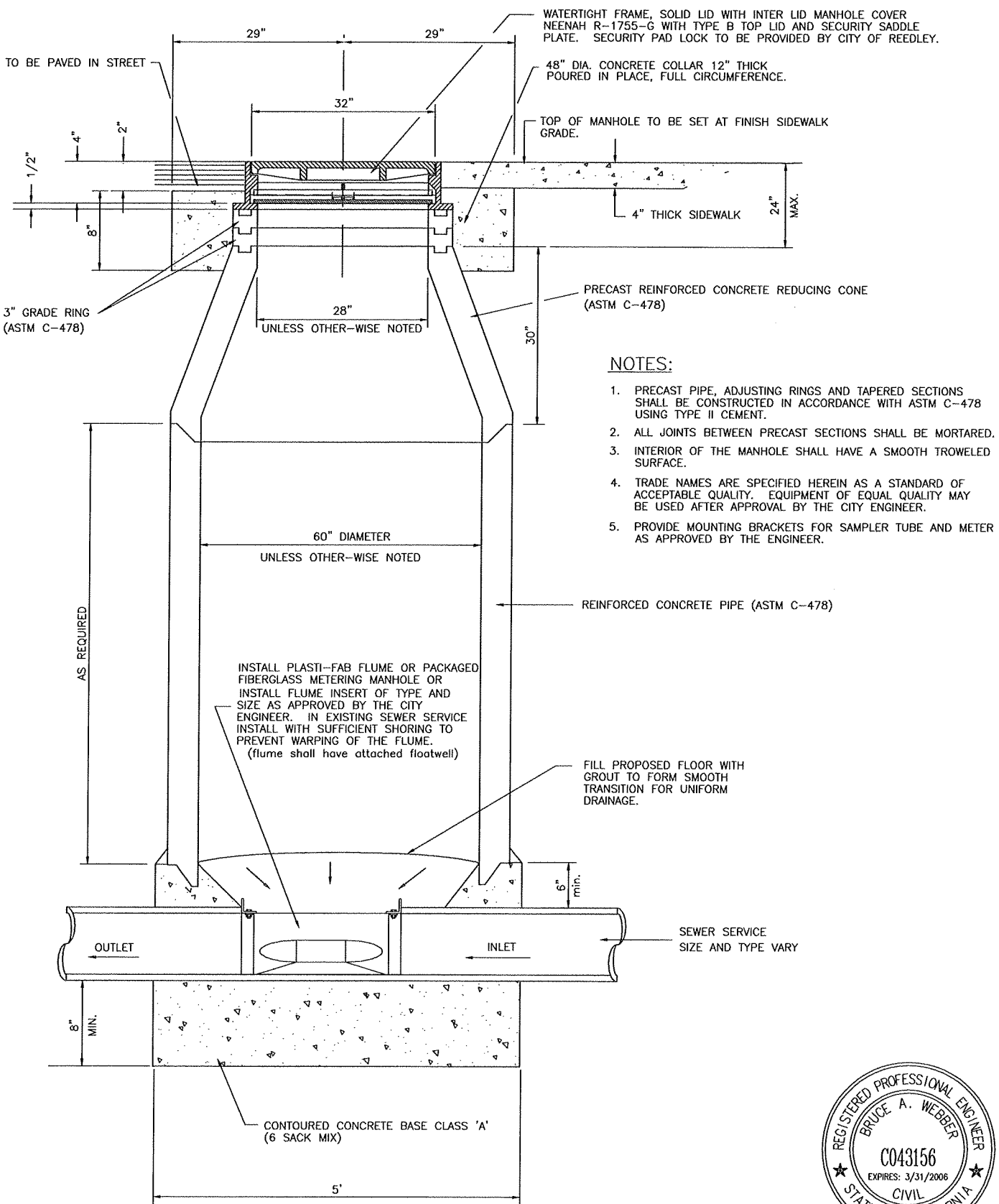

NOTES:

1. PRECAST PIPE, ADJUSTING RINGS AND TAPERED SECTIONS SHALL BE CONSTRUCTED IN ACCORDANCE WITH ASTM C-478 USING TYPE II CEMENT.
2. ALL JOINTS BETWEEN PRECAST SECTIONS SHALL BE MORTARED.
3. INTERIOR OF THE MANHOLE SHALL HAVE A SMOOTH TROWELED SURFACE.
4. TRADE NAMES ARE SPECIFIED HEREIN AS A STANDARD OF ACCEPTABLE QUALITY. EQUIPMENT OF EQUAL QUALITY MAY BE USED AFTER APPROVAL BY THE CITY ENGINEER.
5. PROVIDE MOUNTING BRACKETS FOR SAMPLER TUBE AND METER AS APPROVED BY THE ENGINEER.

REGISTERED PROFESSIONAL ENGINEER
BRUCE A. WEBBER
C043156
EXPIRES: 3/31/2006
CIVIL
STATE OF CALIFORNIA

SEWER MONITORING MANHOLE

CITY ENGINEER
PUBLIC WORKS DEPARTMENT
ENGINEERING DIVISION

12-8-05
PLAN APPROVAL DATE

REVISIONS:
NOV. 2005

CITY OF REEDLEY

S-6

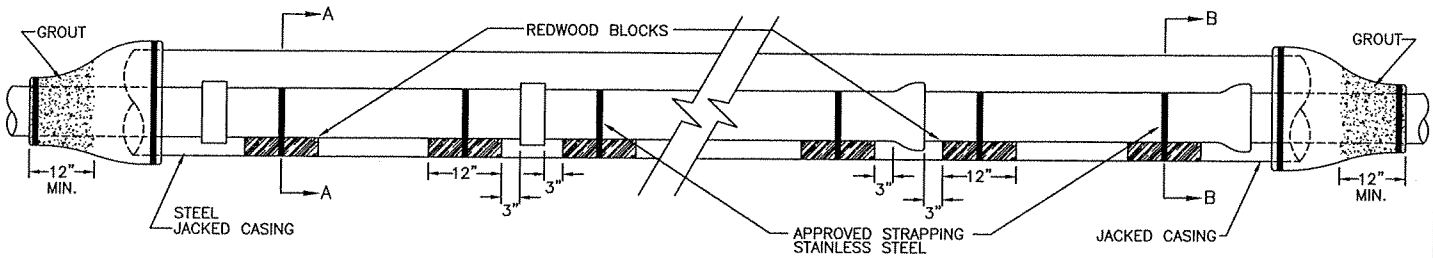

BELL-LESS PIPE

BELL PIPE

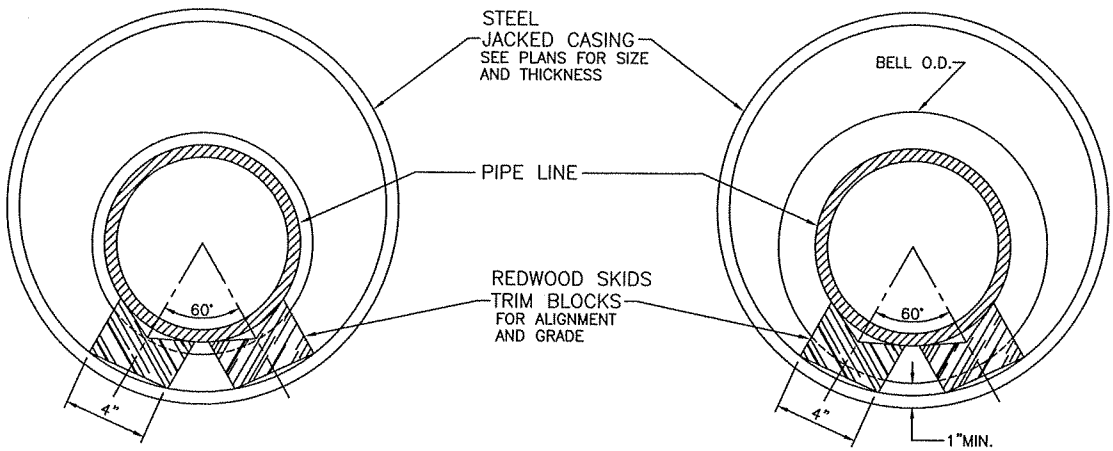

SECTION A-A

SECTION B-B

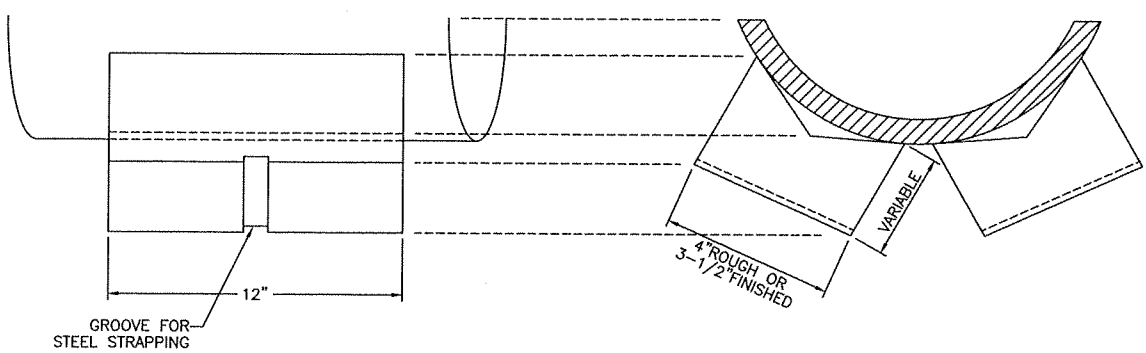

REDWOOD BLOCK DETAIL

NOTES:

1. REDWOOD BLOCKS SHALL BE CONSTRUCTION GRADE.
2. REDWOOD BLOCKS SHALL BE VEED TO FIT CONTOUR OF PIPE.
3. WHEN JACKING CASING GRADE SHALL BE SET SO CENTERLINE OF CASING SHALL COINCIDE WITH CENTERLINE OF SEWER PIPE.
4. REDWOOD BLOCKS SHALL BE STRAPPED TO THE PIPE WITH STEEL STRAPPING OR APPROVED WIRE BANDS.
5. PLUG ENDS OF CASING WITH 12 INCHES MINIMUM OF CONCRETE.
6. CONCRETE SHALL BE CLASS B.

NOT TO SCALE

INSTALLATION OF CARRIER PIPE IN JACKED STEEL CASING	Andrew J. Benelli CITY ENGINEER PUBLIC WORKS DEPARTMENT ENGINEERING DIVISION	May 2, 2003 PLAN APPROVAL DATE
	REVISIONS OCT 2002	CITY OF REEDLEY S-7

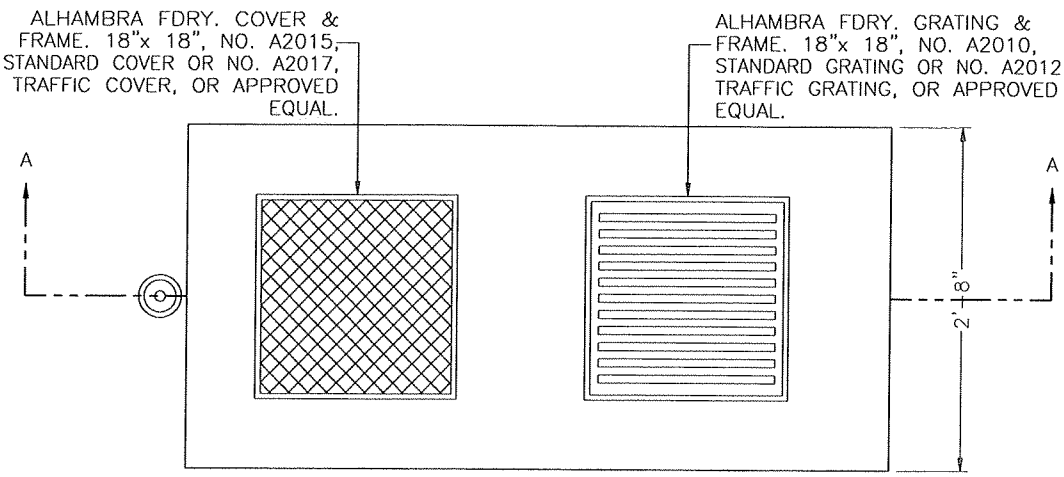

PLAN

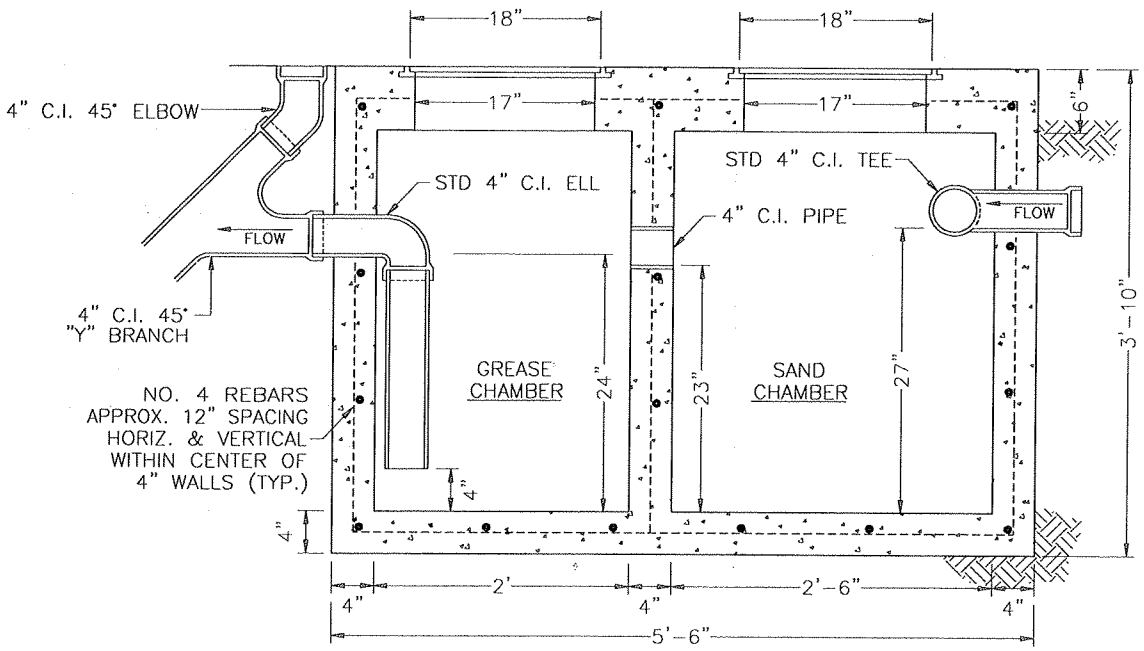

SECTION A–A

NOTES:

1. DIMENSIONS SHOWN ARE MINIMUM. PROPER SIZING TO BE DETERMINED BY CALCULATION, SUBJECT TO APPROVAL OF CITY ENGINEER
2. RESPONSIBILITY FOR CLEANING & MAINTENANCE BELONGS TO THE PROPERTY OWNER.
3. AN ALTERNATE GREASE INTERCEPTOR DEVICE OF STANDARD MANUFACTURE MAY BE SUBSTITUTED FOR THAT SHOWN BELOW, SUBJECT TO APPROVAL OF THE CITY ENGINEER AND CITY BUILDING OFFICIAL.

THIS STANDARD APPLIES TO:

a. RESTAURANTS
b. AUTOMOTIVE GARAGES
c. CAR WASHES
d. OTHER, AS DETERMINED BY THE CITY ENGINEER AND CITY BUILDING OFFICIAL.

NOT TO SCALE

SAND AND GREASE INTERCEPTOR	Andrew J Benelli CITY ENGINEER COMMUNITY DEVELOPMENT DEPARTMENT ENGINEERING DIVISION	Dec 23, 1999 PLAN APPROVAL DATE
	REVISIONS: DEC. 1999	CITY OF REEDLEY S–8

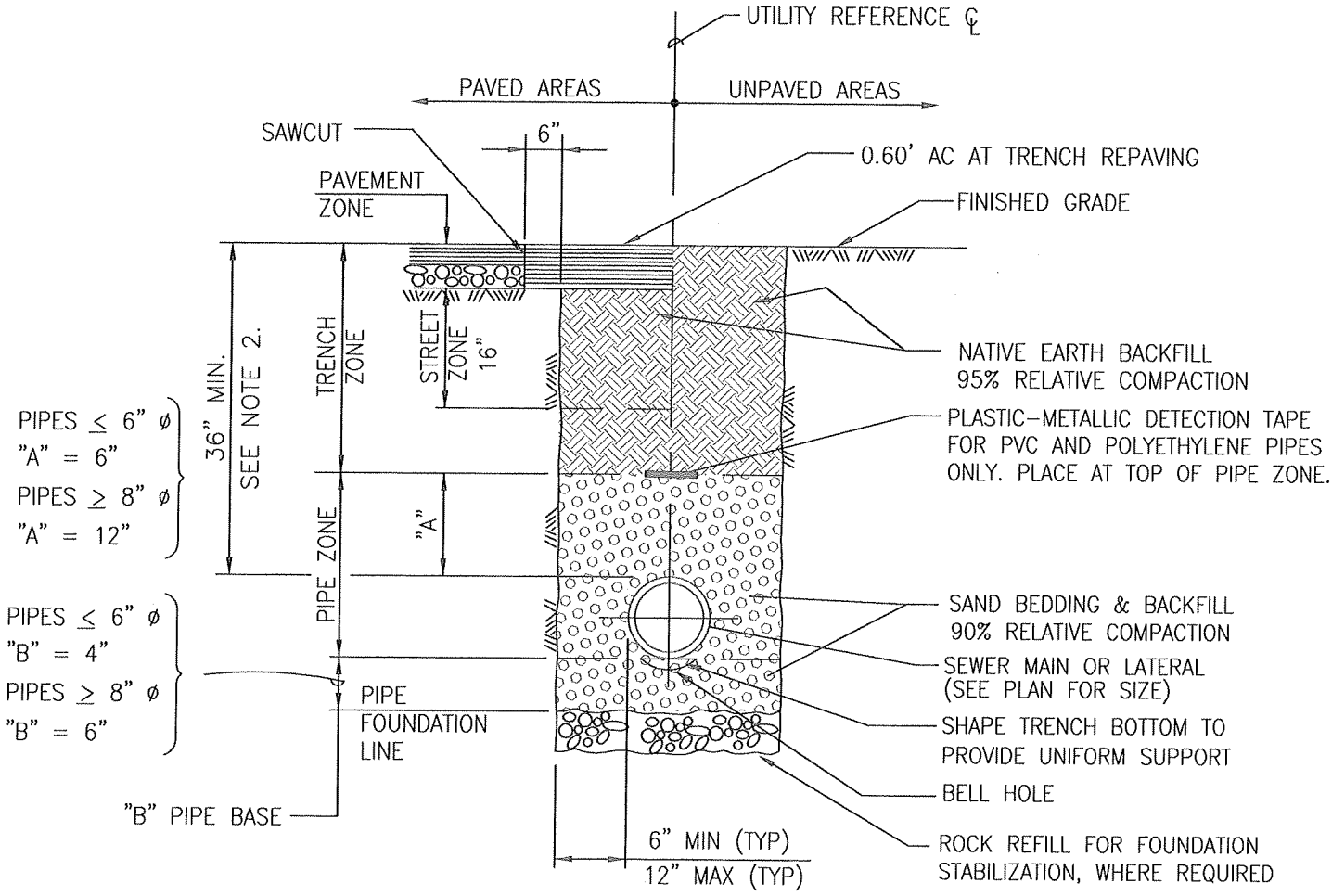

NOTES

1. TRENCH WALL SHOWN VERTICAL FOR CLARITY, EXCAVATE PER OSHA REQUIREMENTS.
2. FOR SPECIAL CIRCUMSTANCES AT SPECIFIC LOCATIONS, MIN. COVER MAY BE REDUCED TO 30" WITH ENGINEER'S APPROVAL.
3. USE THE SAME DETAIL FOR SERVICE LATERALS. REDUCE THICKNESS OF STREET ZONE AS REQUIRED TO HOLD OTHER DIMENSIONS AS SHOWN.

TRENCH DETAIL

NOT TO SCALE

REGISTERED PROFESSIONAL ENGINEER
BRUCE A. WEBBER
C043156
Exp. 3-31-2008
CIVIL
STATE OF CALIFORNIA

TRENCH DETAIL FOR COVER LESS THAN 48"	CITY ENGINEER PUBLIC WORKS DEPARTMENT ENGINEERING DIVISION	1-25-07 PLAN APPROVAL DATE
	REVISIONS: JAN. 2007	CITY OF REEDLEY S-9

N:\AutoCad Drawing Files\Standard Plans\S-9.dwg

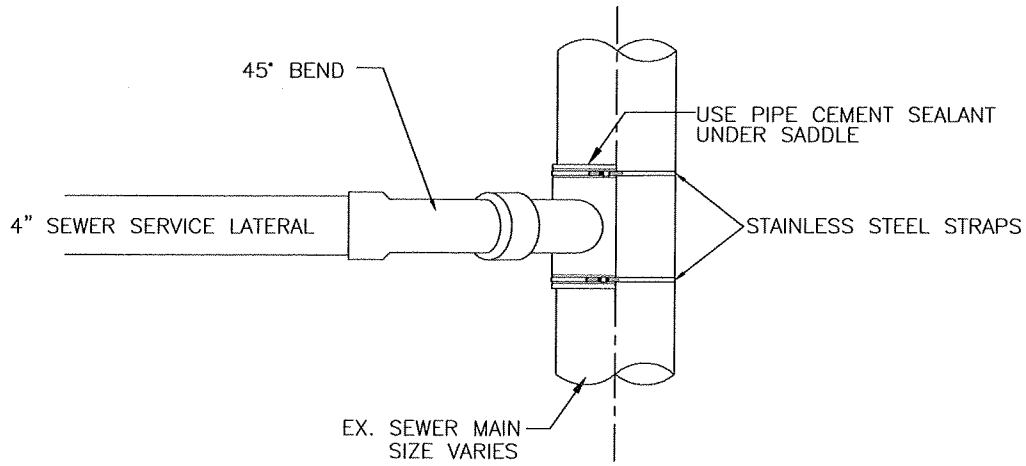

PLAN VIEW

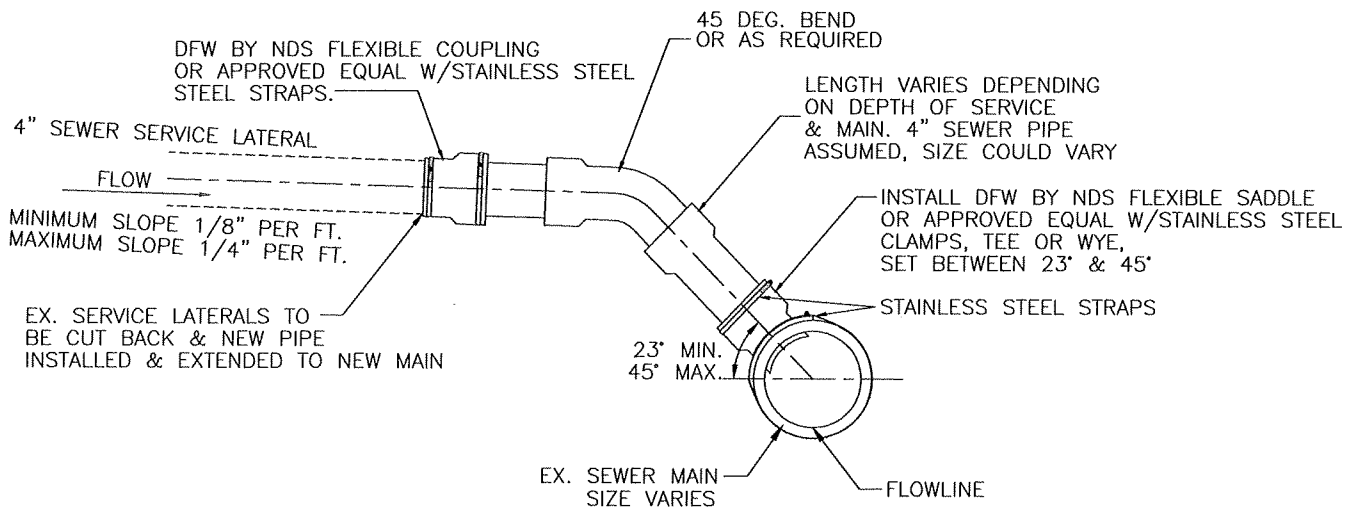

ELEVATION

NOTES:

1. FOR PIPES 6" TO 12" IN DIAMETER, A LICENSED CONTRACTOR (C36) WHO HAS THE PROPER EQUIPMENT AND PERMITS IS CONSIDERED AN APPROVED AGENT AND MAY CORE INTO THE CITY'S SEWER MAINS OR REMOVE A SECTION AND INSTALL A WYE OR TEE.
2. FOR SEWER MAINS 18" OR LARGER, A MANHOLE MUST BE CONSTRUCTED WHERE CORINGS ARE MADE.
3. THE CITY PUBLIC WORKS INSPECTOR MUST OBSERVE ALL SADDLE & CORE CONNECTIONS TO EXISTING CITY SEWER MAINS.
4. VITRIFIED CLAY PIPE SADDLES SHALL BE EXTRA STRENGTH CLAY PIPE AND SHALL CONFORM TO THE REQUIREMENTS OF THE "WEST COAST STANDARDS OF THE CLAY PIPE INSTITUTE".
5. OPENINGS INTO EXISTING SEWER MAINS SHALL BE MADE ONLY LARGE ENOUGH TO ADMIT ALL OF SADDLE FITTINGS.
6. THIS STANDARD DETAIL IS ONLY TO BE USED WHEN CONNECTING TO EXISTING SEWER MAIN LINES. NEW LINES SHALL HAVE WYES AS PER CITY STD. PLAN S-1.
7. APPLY SILICON SEALANT TO COMPRESSION SCREWS AND WRAP STAINLESS STEEL STRAP WITH THREE (3) LAYERS OF PVC TAPE.

REGISTERED PROFESSIONAL ENGINEER
BRUCE A. WEBBER
C043156
EXPIRES: 3/31/2006
CIVIL
STATE OF CALIFORNIA

SEWER LATERAL SERVICE CONNECTION INTO EXISTING SEWER MAIN	CITY ENGINEER PUBLIC WORKS DEPARTMENT ENGINEERING DIVISION	1-26-06 PLAN APPROVAL DATE
	REVISIONS: JAN. 2006	CITY OF REEDLEY S-10

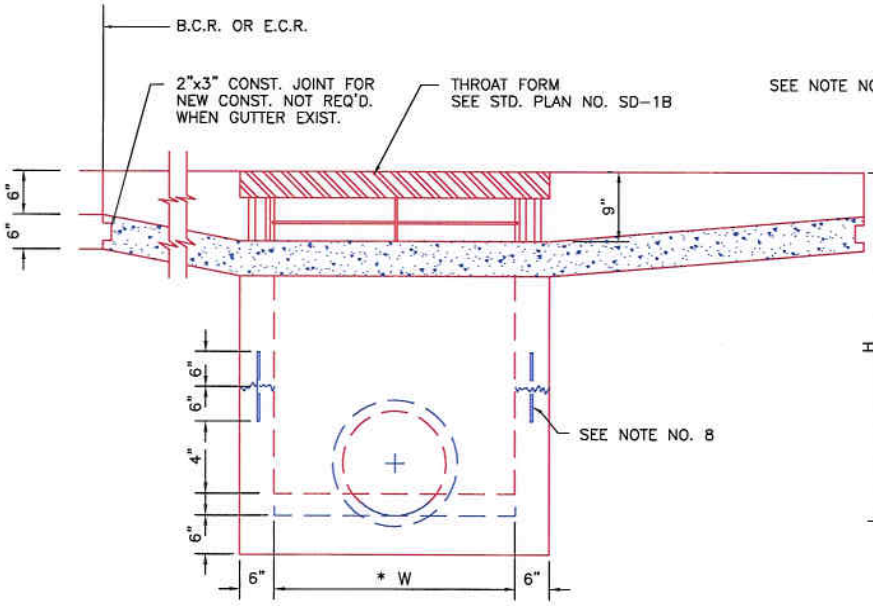

SECTION "BB"

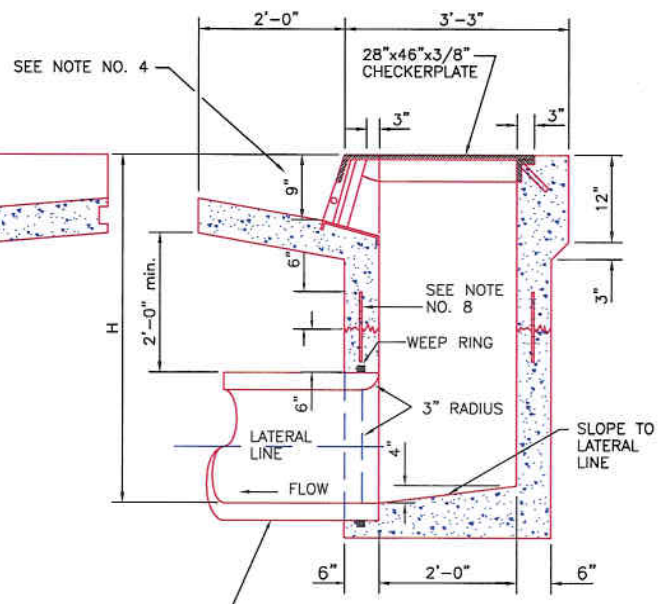

SECTION "AA"

H.D.P.E, R.C.P. OR P.V.C. PIPE WITH WEEP RINGS

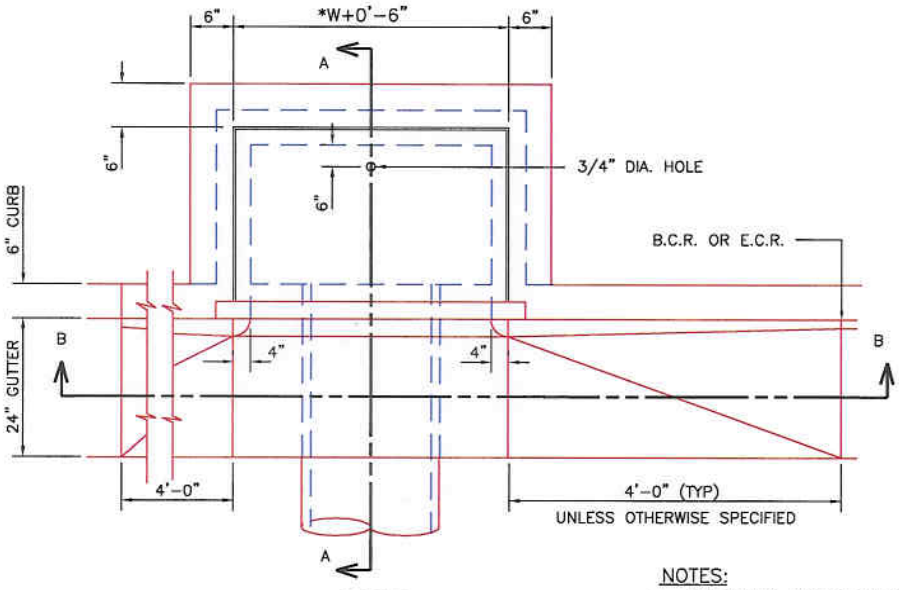

PLAN

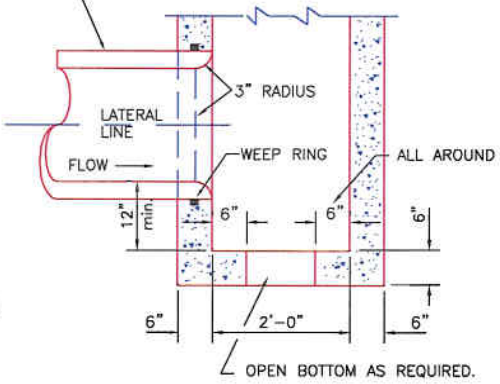

OUTLET DETAIL

SEE NOTE NO. 3

*W = 3'-6" UNLESS OTHERWISE DIRECTED THE CITY ENGINEER OR SHOWN ON THE PLANS.

B.C.R. OR E.C.R. = BEGIN CURB RETURN OR END OF CURB RETURN

REGISTERED PROFESSIONAL ENGINEER
BRUCE A. WEBBER
C043156
Exp. 3-31-2008
CIVIL
STATE OF CALIFORNIA

NOTES:

1. THE INLET MAY BE MODIFIED SLIGHTLY TO MATCH EXISTING IMPROVEMENTS, AS DIRECTED BY THE ENGINEER.
2. STRUCTURE SHALL BE CLASS "A" 6-SACK CONCRETE, MAX. 3-1/2" SLUMP. EXPOSED SURFACES SHALL BE BROOM FINISHED.
3. COST OF FRAME, GRATE, CURB AND GUTTER WITHIN LIMTS OF GUTTER DEPRESSION SHALL BE INCLUDED IN THE PRICE OF INLET OR OUTLET.
4. WHEN EMPLOYED AS OUTLET, CONSTRUCT OPEN BOTTOM, PLACE FRAME AND GRATE 6" BELOW TOP OF CURB GRADE, AND ELIMINATE 1/2" IRON ROD AND HANGERS.
5. CURB & GUTTER SHALL BE CONSTRUCTED OR RECONSTRUCTED FOR A DISTANCE OF 8'-0" AND COST THEREOF SHALL BE INCLUDED IN PRICE OF INLET OR OUTLET.
6. FLOOR OF THE INLET SHALL SLOPE FROM ALL WALLS TO THE LATERAL LINE AND SHALL BE GIVEN A STEEL-TROWELED FINISH.
7. AT THE CONTACT POINT BETWEEN THE LATERAL LINE AND THE INLET WALL A SMOOTH 3" RADIUS CURVE SHALL BE CONSTRUCTED.
8. IF INLET IS CONSTRUCTED IN A TWO STAGE POUR, PROVIDE A ROUGHENED CONSTRUCTION JOINT AND PLACE NO. 4 BARS 24" LONG, 12" O.C. IN EACH OF THE FOUR WALLS AS SHOWN.
9. NO. 4 REINFORCING BARS SHALL BE PLACED VERTICALLY AT 12" OC MAX. WITH NO. 4 HORIZONTAL REINFORCING TIE BARS AT 36" OC FOR H=6.5' OR MORE.

NOT TO SCALE

TYPE "A" STORM DRAINAGE INLET

CITY ENGINEER
PUBLIC WORKS DEPARTMENT
ENGINEERING DIVISION

12-27-07
PLAN APPROVAL DATE

REVISIONS:
DEC 2007

CITY OF REEDLEY

SD-1A

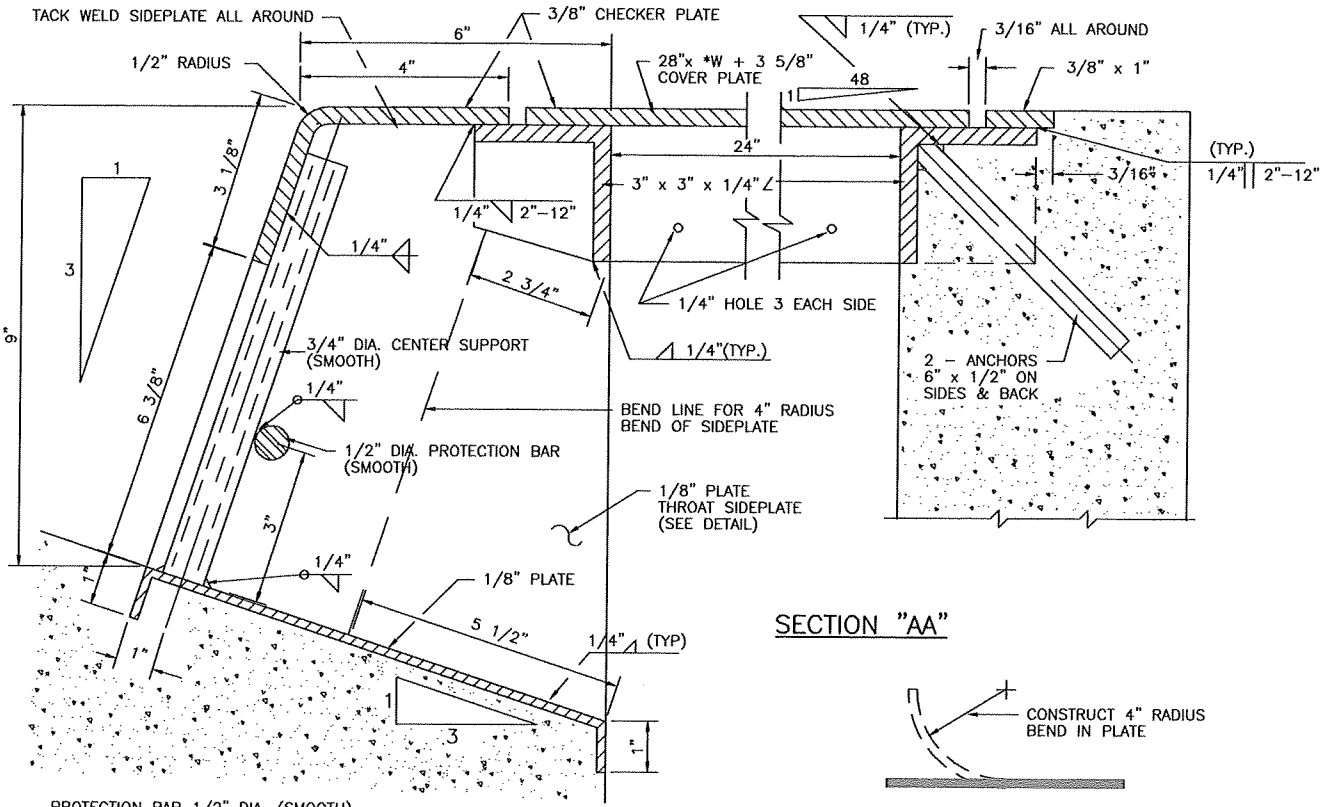

SECTION "AA"

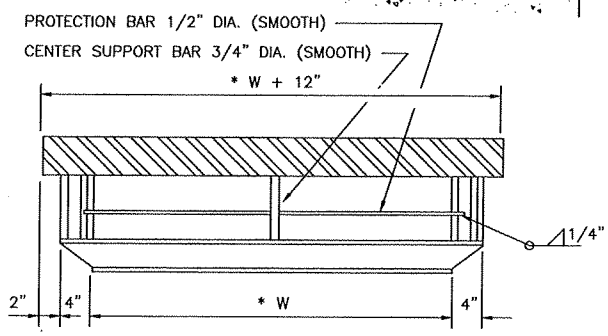

FRONT

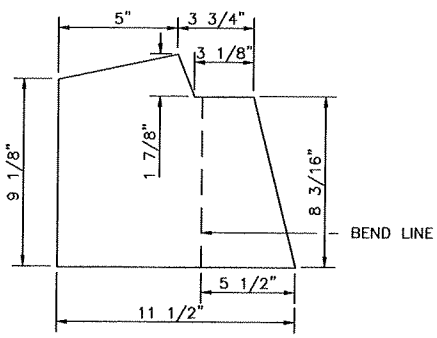

1/8" STEEL PLATE

THROAT SIDEPLATE DETAIL

*W = 3'-6" UNLESS OTHERWISE DIRECTED BY THE CITY ENGINEER OR AS NOTED ON THE PLANS.

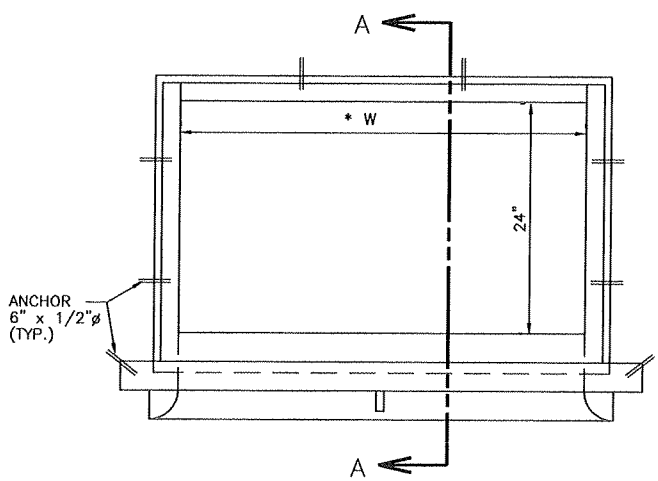

PLAN

NOTES:

1. ALL DIMENSIONS ARE FINISHED DIMENSIONS.
2. ALL PARTS SHALL BE STRUCTURAL GRADE STEEL.
3. ALL EXPOSED METAL PARTS SHALL BE PAINTED OR DIPPED WITH ASPHALTUM PAINT.

REGISTERED PROFESSIONAL ENGINEER
BRUCE A. WEBBER
C043156
Exp. 3-31-2006
CIVIL
STATE OF CALIFORNIA

NOT TO SCALE

TYPE "A" STORM DRAINAGE INLET THROAT FORM & FRAME	Bruce Webber CITY ENGINEER PUBLIC WORKS DEPARTMENT ENGINEERING DIVISION	12-18-05 PLAN APPROVAL DATE
	REVISIONS: DEC. 2005	CITY OF REEDLEY SD-1B

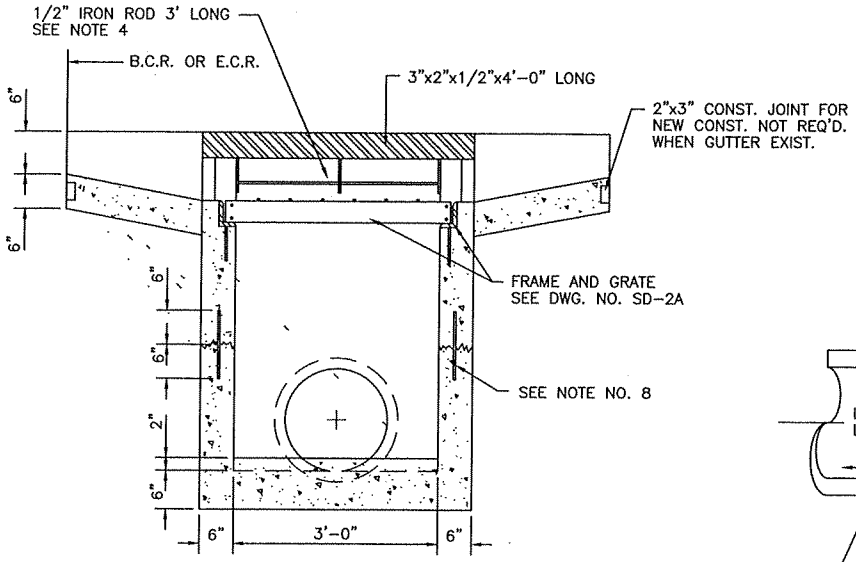

SECTION "BB"

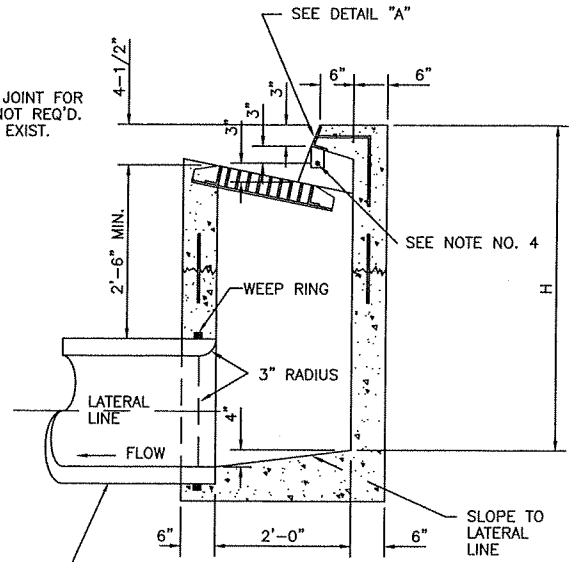

SECTION "AA"

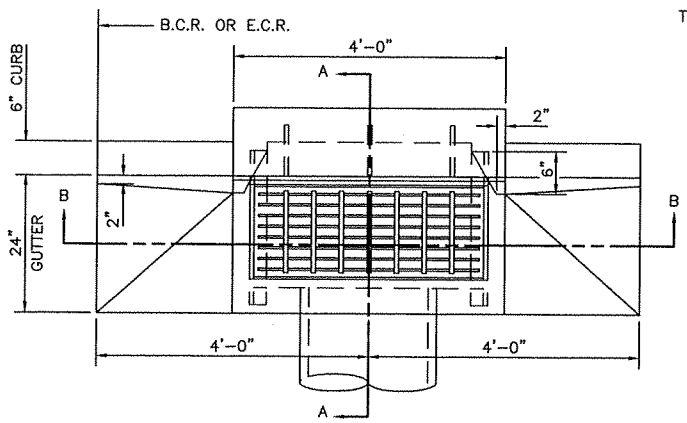

PLAN

B.C.R. OR E.C.R. = BEGIN CURB RETURN OR END OF CURB RETURN

TYPE III R.C.P. OR P.V.C. PIPE WITH WEEP RINGS

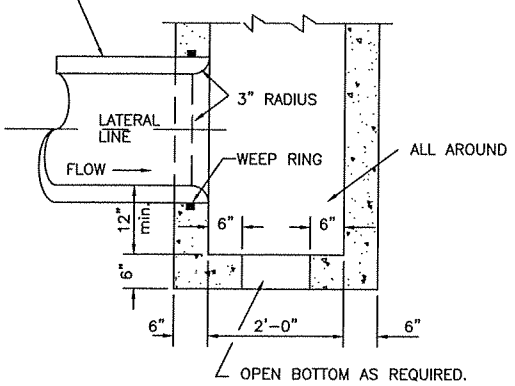

OUTLET DETAIL
SEE NOTE NO. 4

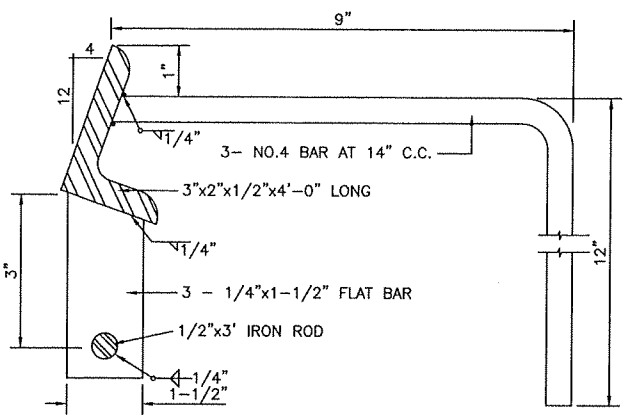

DETAIL "A"

NOTES:

1. THE INLET MAY BE MODIFIED SLIGHTLY TO MATCH EXISTING IMPROVEMENTS, AS DIRECTED BY THE ENGINEER.
2. STRUCTURE SHALL BE CLASS "A" CONCRETE. EXPOSED SURFACES SHALL BE FINISHED AS PER CURB SPECIFICATIONS.
3. COST OF FRAME AND GRATE, AND CURB AND GUTTER WITHIN LIMITS OF GUTTER DEPRESSION SHALL BE INCLUDED IN PRICE OF INLET OR OUTLET.
4. WHEN EMPLOYED AS OUTLET, CONSTRUCT OPEN BOTTOM, PLACE FRAME AND GRATE 6" BELOW TOP OF CURB GRADE, AND ELIMINATE 1/2" IRON ROD AND HANGERS.
5. CURB AND GUTTER SHALL BE CONSTRUCTED OR RECONSTRUCTED FOR A DISTANCE OF 8'-0" AND COST THEREOF SHALL BE INCLUDED IN PRICE OF INLET OR OUTLET.
6. FLOOR OF THE INLET SHALL SLOPE FROM ALL WALLS TO THE LATERAL LINE AND SHALL BE GIVEN A STEEL-TROWELED FINISH.
7. AT THE CONTACT POINT BETWEEN THE LATERAL LINE AND THE INLET WALL A SMOOTH 3" RADIUS CURVE SHALL BE CONSTRUCTED.
8. IF INLET IS CONSTRUCTED IN A TWO STAGE POUR, PROVIDE A ROUGHENED CONSTRUCTION JOINT AND PLACE ONE NO. 4 BAR 12" LONG IN EACH OF THE FOUR WALLS AS SHOWN.
9. NO. 4 REINFORCING BARS SHALL BE PLACED VERTICALITY AT 12" O.C. MAX. WITH NO. 4 HORIZONTAL REINFORCING TIE BARS AT 36" O.C. FOR H=6.5' OR MORE.

NOT TO SCALE

TYPE "B" STORM DRAINAGE INLET	Andrew J. Benelli CITY ENGINEER PUBLIC WORKS DEPARTMENT ENGINEERING DIVISION	May 2, 2003 PLAN APPROVAL DATE
	REVISIONS: MAY 1999 APRIL 2003	CITY OF REEDLEY SD-2A

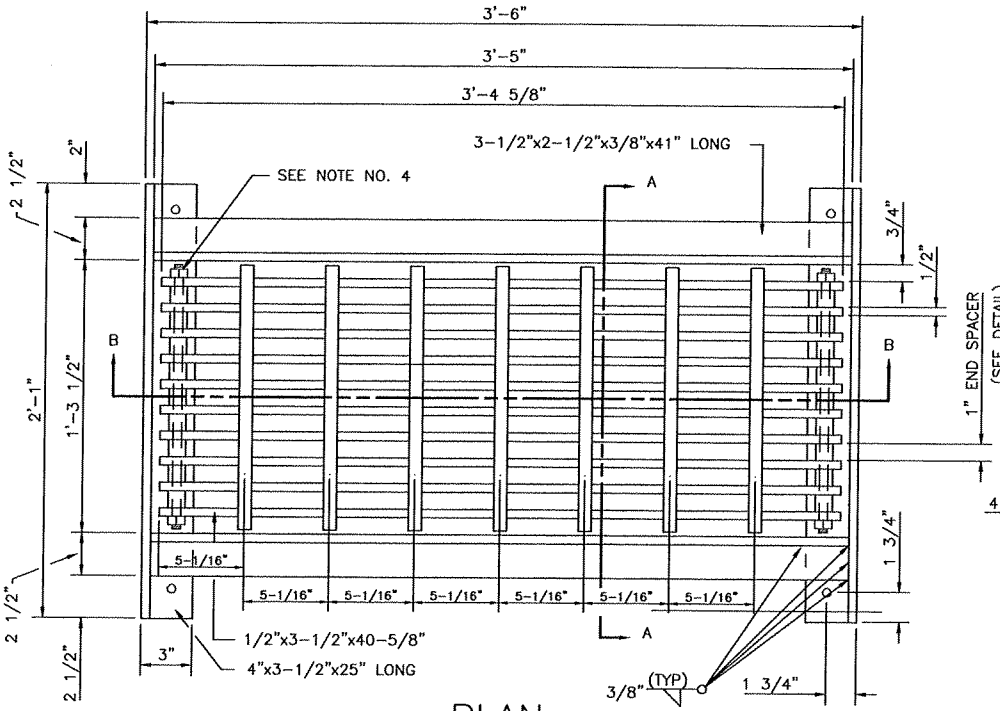

PLAN

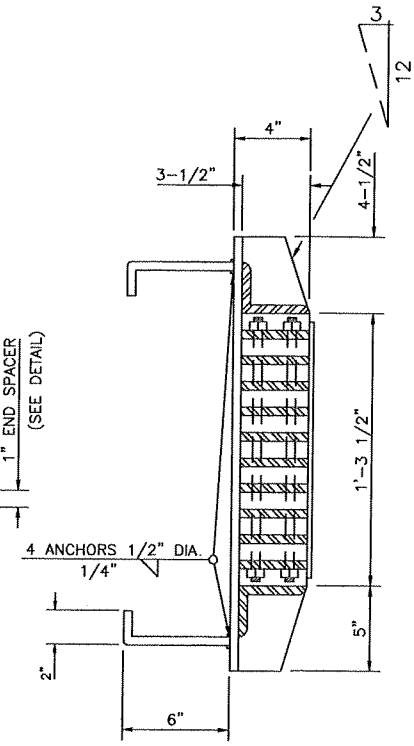

SECTION "AA"

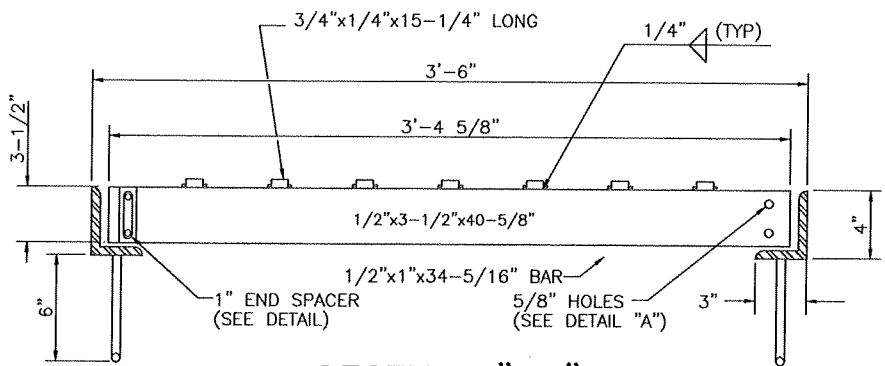

SECTION "BB"

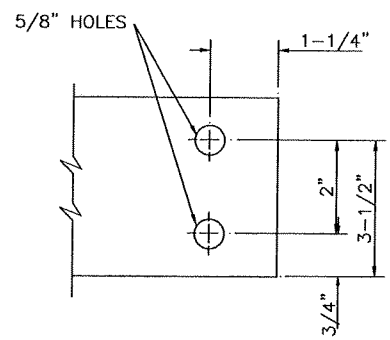

DETAIL "A"

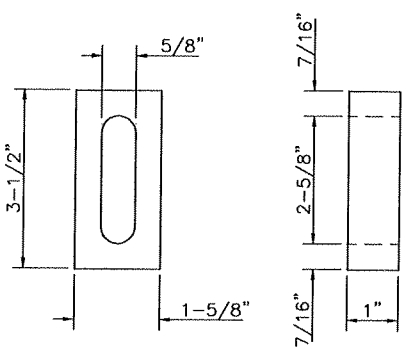

END SPACER

NOTES:

1. ALL DIMENSIONS ARE FINISHED DIMENSIONS.
2. ALL PARTS SHALL BE OF STRUCTURAL GRADE STEEL.
3. ALL EXPOSED METAL PARTS SHALL BE PAINTED OR DIPPED WITH AN ASPHALTUM PAINT.
4. 2-1/2"x15-3/8" STEEL RODS. ONE NUT ON EACH END. TACK WELD NUTS TO ADJACENT BARS AFTER ASSEMBLY, ON EACH SIDE.

REGISTERED PROFESSIONAL ENGINEER
BRUCE A. WEBBER
C043156
Exp. 3-31-2006
CIVIL
STATE OF CALIFORNIA

NOT TO SCALE

TYPE "B" INLET FRAME AND GRATE	Bruce Webber CITY ENGINEER PUBLIC WORKS DEPARTMENT ENGINEERING DIVISION	12-18-05 PLAN APPROVAL DATE
	REVISIONS: NOV. 2005	CITY OF REEDLEY SD-2B

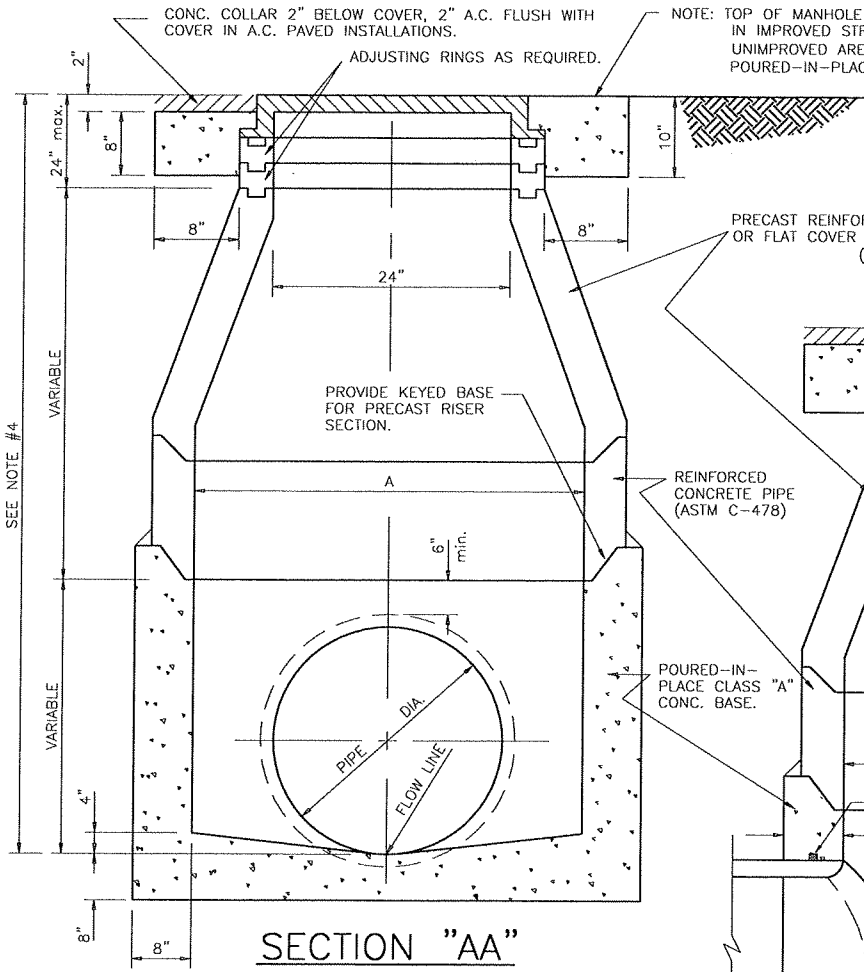

SECTION "AA"

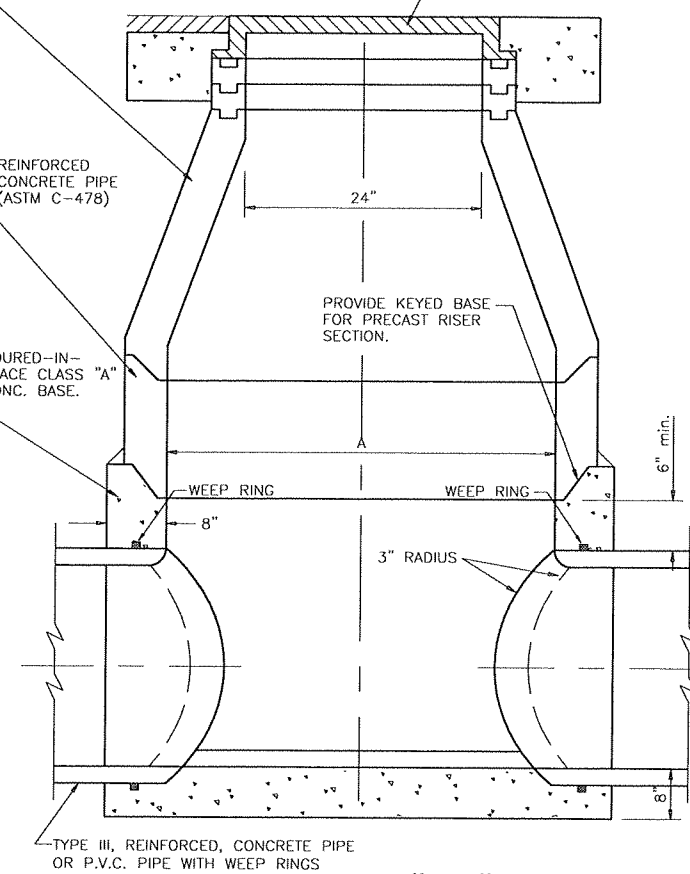

SECTION "BB"

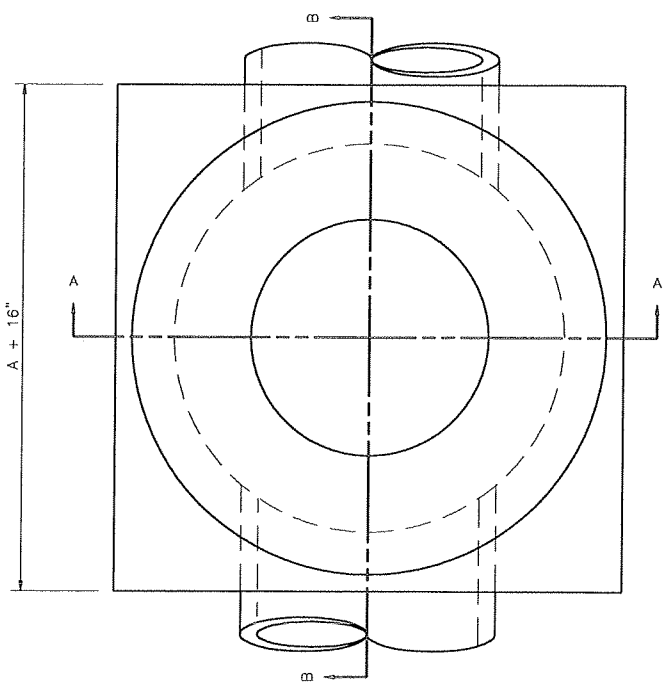

PLAN

NOT TO SCALE

STANDARD MANHOLE

CASE I	A = 48"
CASE II	A = 60"
CASE III	A = 72"

NOTES:

1. PRECAST PIPE, ADJUSTING RINGS AND TAPERED SECTIONS SHALL BE CONSTRUCTED IN ACCORDANCE WITH ASTM C-478 USING TYPE II CEMENT.
2. ALL JOINTS BETWEEN PRECAST SECTIONS SHALL BE MORTARED.
3. INTERIOR OF THE MANHOLE SHALL HAVE A SMOOTH TROWELED SURFACE.
4. IF THE DISTANCE BETWEEN THE FLOW LINE OF THE MANHOLE AND THE FINISHED GRADE OF THE LID IS GREATER THAN OR EQUAL TO 12 FT., THE MANHOLE IS TO BE CONSTRUCTED WITH STEPS (3/4" DIA. MILD STEEL BAR BENT HOT AND GALVANIZED AFTER BENDING) AND AN ECCENTRIC CONE. STEPS SHALL HAVE AN 18" WIDTH AND EPOXY GROUTED ON 15" CENTERS, EXCEPT THAT THE FIRST STEP SHALL BE 24" ABOVE THE FLOW LINE AND THE LAST STEP SHALL BE NO MORE THAN 10" BELOW THE FRAME. THE COST OF THE STEPS AND THEIR INSTALLATION SHALL BE INCLUDED IN THE COST OF THE MANHOLE.

STORM DRAIN MANHOLE

Andrew J. Benetti
CITY ENGINEER
COMMUNITY DEVELOPMENT DEPARTMENT
ENGINEERING DIVISION

March 26, 99
PLAN APPROVAL DATE

REVISIONS:
FEB. 1999

CITY OF REEDLEY

SD-3

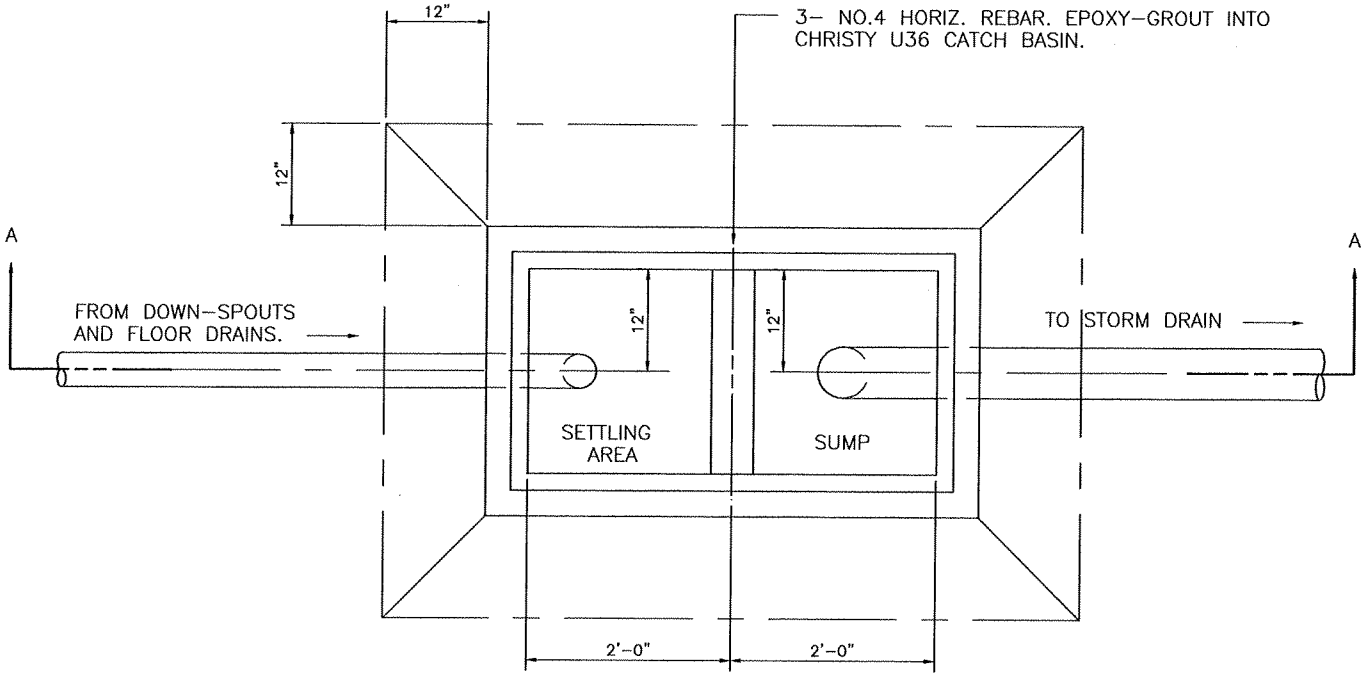

PLAN

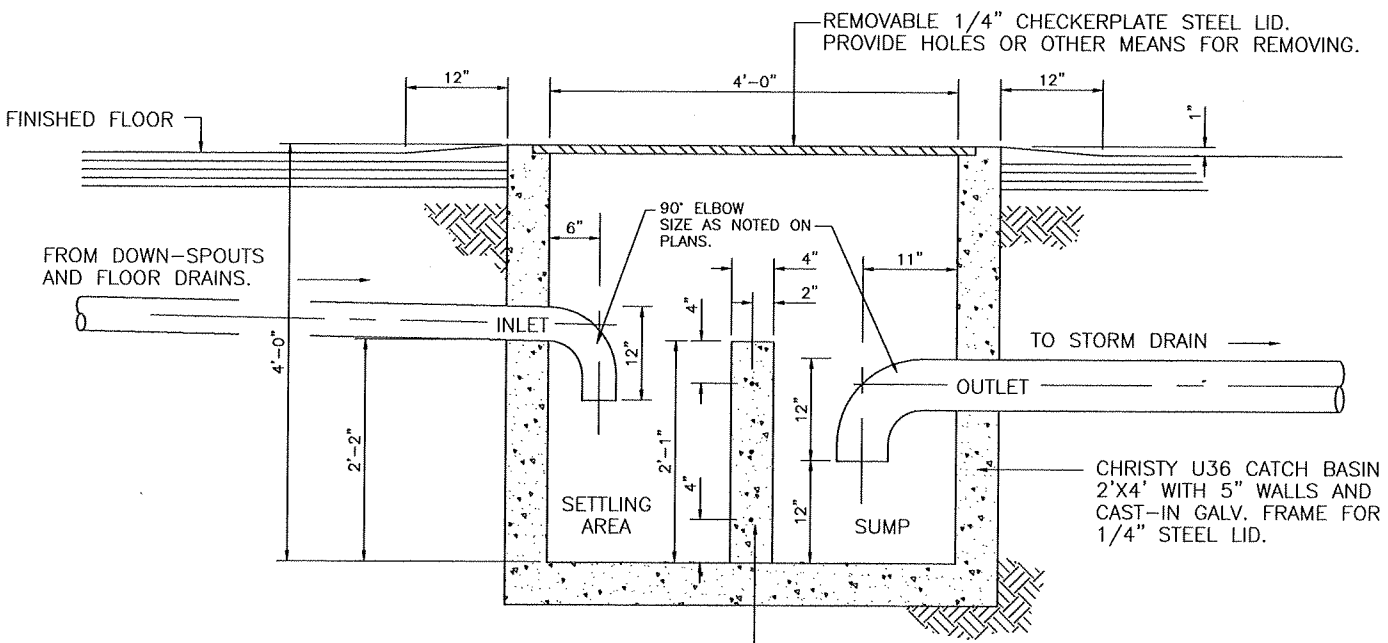

NOTES:
1. CONCRETE SHALL BE CLASS "A".
2. ELEVATE INLET FULL PIPE DIAMETER ABOVE OUTLET.

SECTION "AA"

REGISTERED PROFESSIONAL ENGINEER
BRUCE A. WEBBER
C043156
Exp. 3-31-2006
CIVIL
STATE OF CALIFORNIA

NOT TO SCALE

SAND TRAP	CITY ENGINEER PUBLIC WORKS DEPARTMENT ENGINEERING DIVISION	1-2-06 PLAN APPROVAL DATE
	REVISIONS: DEC. 2005	CITY OF REEDLEY SD-4

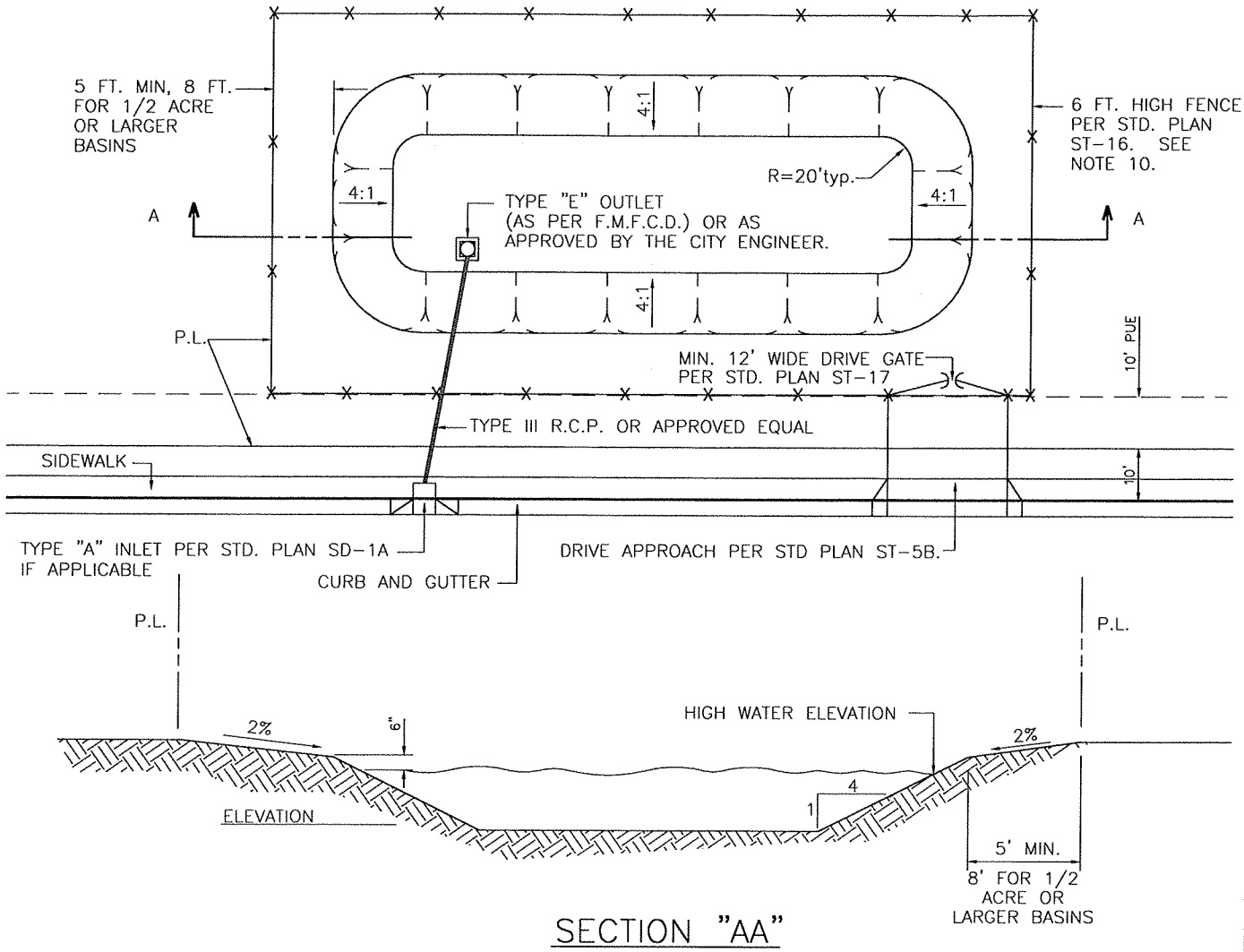

SECTION "AA"

NOTES: DESIGN MINIMUMS

1. OVERFLOW MUST BE TO THE STREET, UNLESS OTHERWISE APPROVED BY THE CITY ENGINEER.
2. DESIGN WATER SURFACE ELEVATION SHALL SIX (6") INCHES BELOW THE LOWEST INLET FLOW LINE OR POND PERIPHERAL ELEVATION, WHICHEVER IS LOWER.
3. REQUIRED CAPACITY: $V = C\ I\ A$ WHERE,
   - V = REQUIRED BASIN CAPACITY IN CUBIC FEET
   - C = RUNOFF COEFFICIENT
   - I = RAINFALL FROM A DESIGN STORM (0.28' / 5YR.– 10 DAY STORM MIN.)
   - A = TRIBUTARY AREA IN SQUARE FEET.
4. PROVIDE COMPOSITE "C" CALCULATIONS.
5. EIGHT (8') FOOT WIDE VEHICLE RAMP WITH A MAX. SLOPE OF 15% REQUIRED IN 1/2 ACRE OR LARGER BASINS.
6. TEMPORARY PONDING BASINS SHALL BE FENCED WITHIN SEVEN (7) DAYS TIME AFTER THEY BECOME OPERATIONAL.
7. BASIN SHALL BE SIZED TO HANDLE THE REQUIRED STORAGE VOLUME WITHOUT EXCEEDING AN EXCAVATION DEPTH OF TWELVE (12') FEET.
8. ADEQUATE AREA AT THE FLOOR OF THE BASIN SHALL BE PROVIDED FOR MANEUVERING MAINTENANCE EQUIPMENT.
9. LANDSCAPING OF THE BASIN NEED NOT BE NECESSARY IF SCREENED FENCING IS PROVIDED; HOWEVER, LANDSCAPING TREATMENT BETWEEN THE FENCE AND THE STREET MAY BE REQUIRED.
10. FENCING IS NOT REQUIRED ON BASINS WHERE THE MAXIMUM POSSIBLE WATER DEPTH DOES NOT EXCEED 18" AND THE SIDE SLOPES ARE 6 TO 1 OR FLATTER.
11. A SOIL BORING LOG TO A DEPTH OF NOT LESS THAN 30 FEET SHALL BE SUBMITTED TO THE CITY ENGINEER.

NOT TO SCALE

TEMPORARY PONDING BASIN	Andrew J. Benelli CITY ENGINEER PUBLIC WORKS DEPARTMENT ENGINEERING DIVISION	02-24-04 PLAN APPROVAL DATE
	REVISIONS: JAN 2004	CITY OF REEDLEY SD-5

THE DEVELOPER SHALL INCORPORATE DUST AND EROSION CONTROL MEASURES INTO THE CONSTRUCTION PHASE OF THE PROJECT. THE CITY ENGINEER SHALL REVIEW AND APPROVE SAID MEASURES PRIOR TO THE ISSUANCE OF BUILDING PERMITS. THE APPLICANT'S CONTRACTOR SHALL TAKE ALL REASONABLE PRECAUTIONS TO PREVENT SILT AND OTHER SEDIMENTATION FROM ENTERING THE CITY OF REEDLEY'S STORM DRAINAGE AND SEWER SYSTEMS. SUCH PRECAUTIONS SHOULD GENERALLY CONFORM TO "STATE OF CALIFORNIA DEPARTMENT OF TRANSPORTATION HANDBOOKS," DATED SPETEMBER 2002 AND REPRINTED APRIL 2003
SUCH PRECAUTIONS AND DETAILS SHALL BE NOTED OR SHOWN ON THE GRADING AND DRAINAGE IMPROVEMENT PLANS AND ARE SUBJECT TO THE APPROVAL OF THE CITY ENGINEER.

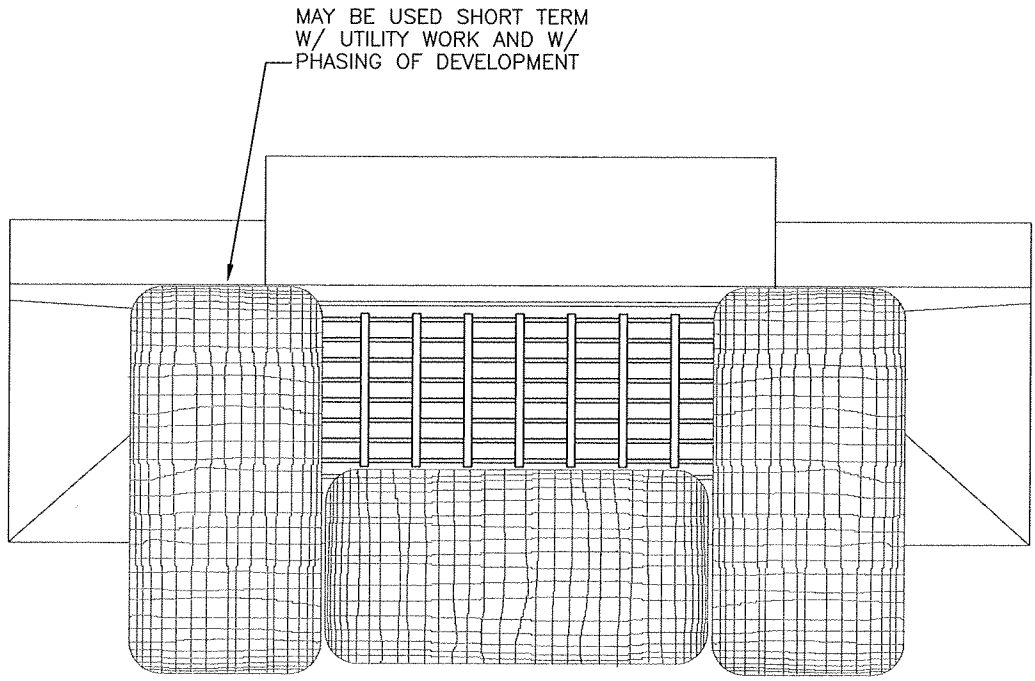

BIOFILTER BAGS
TEMPORARY

CATCH BASIN

NOT TO SCALE

EROSION CONTROL	Andrew J. Benetti CITY ENGINEER PUBLIC WORKS DEPARTMENT ENGINEERING DIVISION	07-27-04 PLAN APPROVAL DATE
	REVISIONS: AUG. 2001 JULY 2004	CITY OF REEDLEY SD-6

NOT TO SCALE

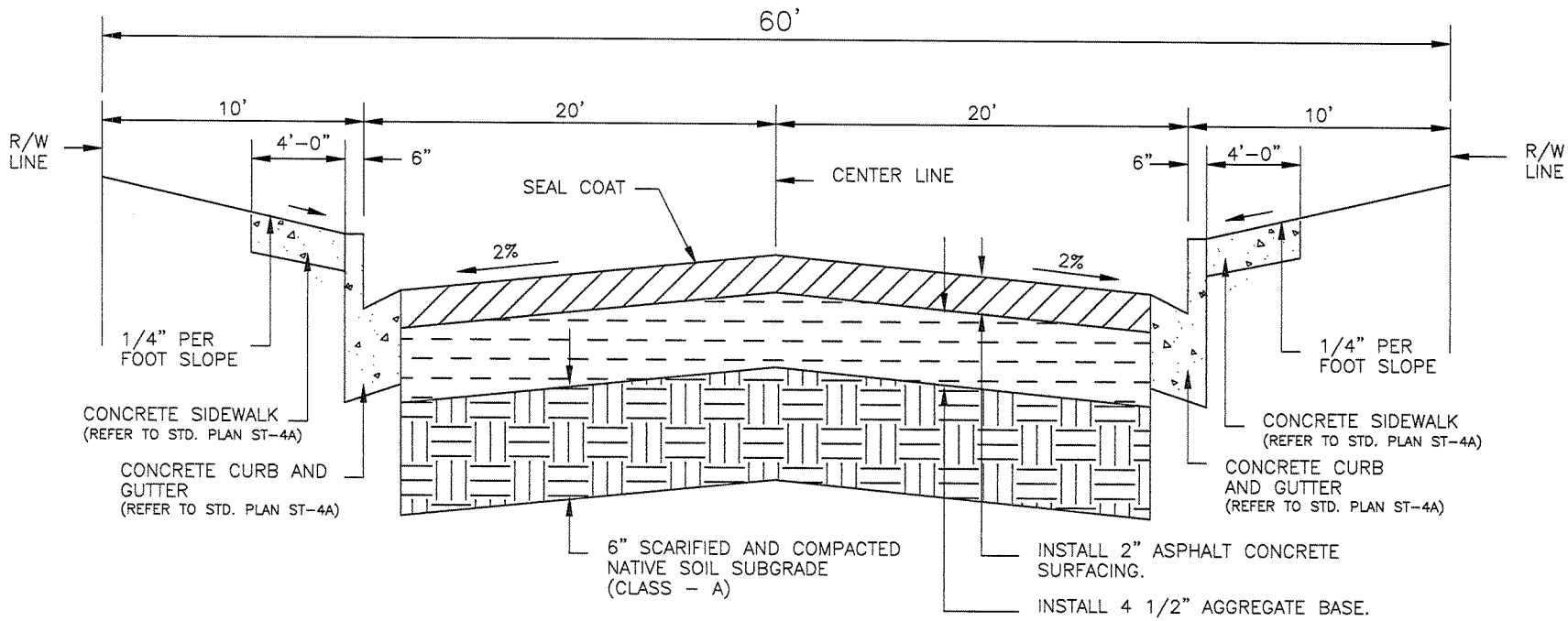

LOCAL RESIDENTIAL STREET

NOTES:

1. A MINIMUM CENTER LINE RADIUS OF CURVATURE FOR LOCAL RESIDENTIAL STREETS IS 175 FEET, UNLESS OTHERWISE DIRECTED BY THE CITY ENGINEER
2. 2" x 6" REDWOOD HEADERBOARDS AND 6" HIGH A.C. DIKE MAY BE REQUIRED WHERE FRACTIONAL PORTION OF STREET IS IMPROVED.
3. STRUCTURAL SECTION SHOWN IS MINIMUM, ACTUAL SECTION SHALL BE BASED ON "R" VALUE TESTS AND STANDARD PLAN ST-11.

LOCAL RESIDENTIAL STREET

CITY ENGINEER
PUBLIC WORKS DEPARTMENT
ENGINEERING DIVISION

12-5-05
PLAN APPROVAL DATE

REVISIONS
NOV. 2005

CITY OF REEDLEY
ST-1A

REGISTERED PROFESSIONAL ENGINEER
BRUCE A. WEBBER
C043156
Exp. 3-31-2006
CIVIL
STATE OF CALIFORNIA

NOT TO SCALE

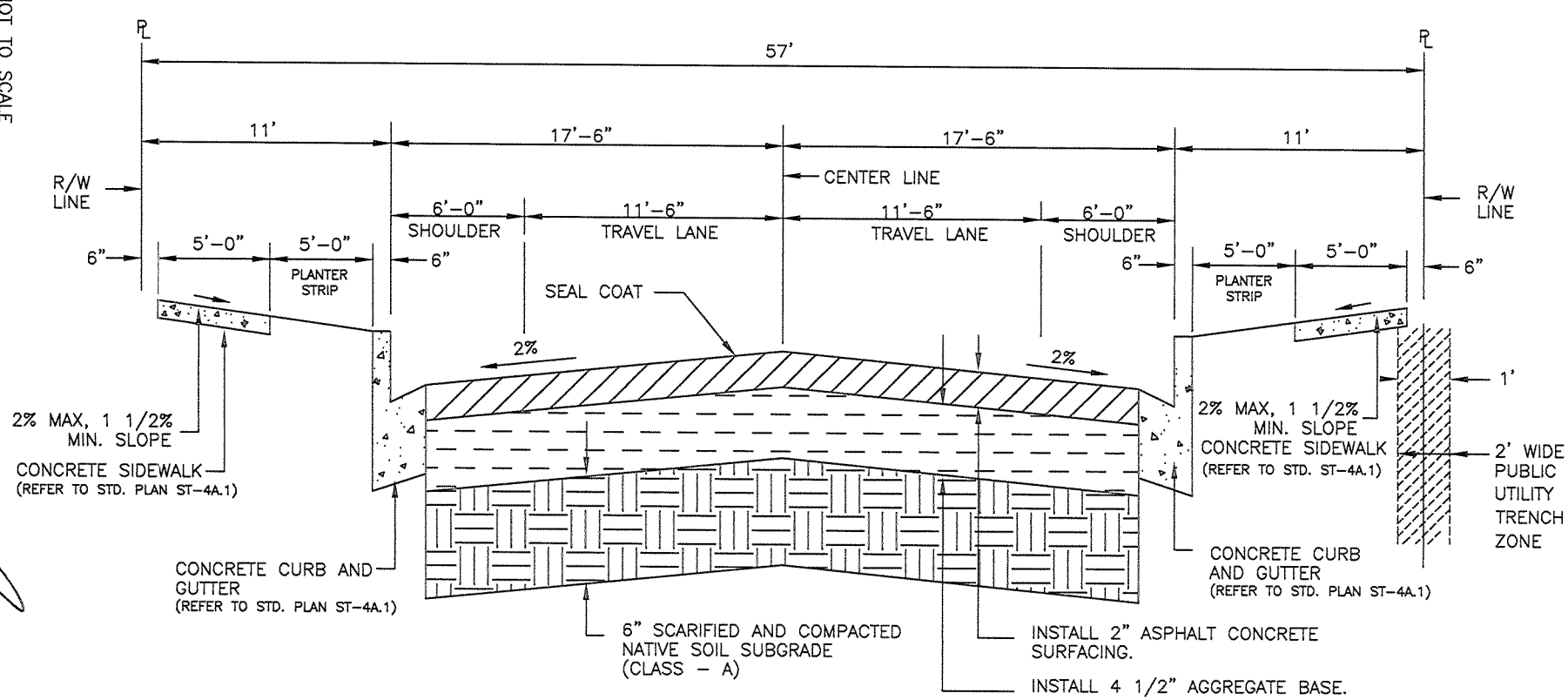

LOCAL RESIDENTIAL STREET

NOTES:

1. A MINIMUM CENTER LINE RADIUS OF CURVATURE FOR LOCAL RESIDENTIAL STREETS IS 175 FEET, UNLESS OTHERWISE DIRECTED BY THE CITY ENGINEER
2. MAXIMUM BLOCK LENGTH FOR A LOCAL RESIDENTIAL STREET IS 660 FEET.
3. 2" x 6" REDWOOD HEADERBOARDS AND 6" HIGH A.C. DIKE MAY BE REQUIRED WHERE FRACTIONAL PORTION OF STREET IS IMPROVED.
4. STRUCTURAL SECTION SHOWN IS MINIMUM, ACTUAL SECTION SHALL BE BASED ON "R" VALUE TESTS AND STANDARD PLAN ST-11.

REGISTERED PROFESSIONAL ENGINEER
BRUCE A. MEBBER
C043156
Exp. 3-31-2008
CIVIL
STATE OF CALIFORNIA

LOCAL RESIDENTIAL STREET WITHIN REEDLEY SPECIFIC PLAN AREA

CITY ENGINEER
PUBLIC WORKS DEPARTMENT
ENGINEERING DIVISION

5-15-07
PLAN APPROVAL DATE

REVISIONS
NOV. 2005, MAY 2007

CITY OF REEDLEY
ST-1A.1

NOT TO SCALE

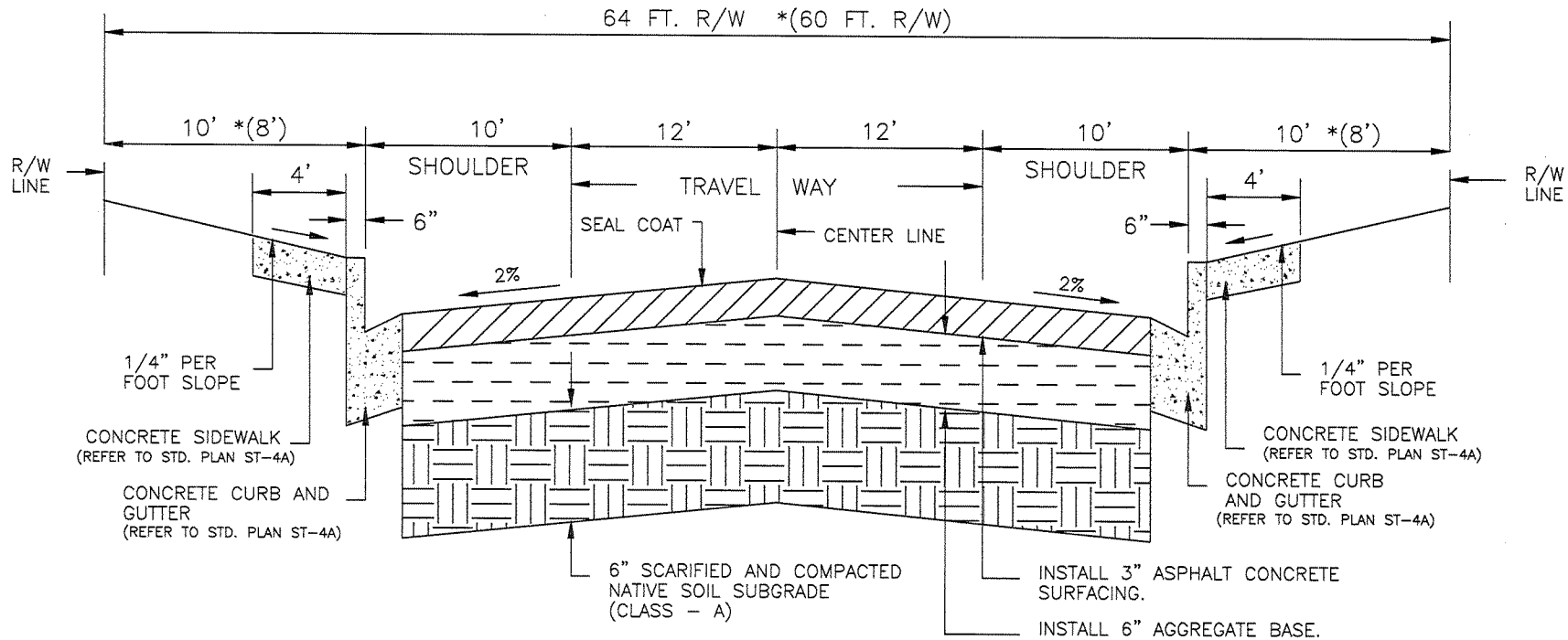

LOCAL INDUSTRIAL STREET

NOTES:

1. 2" x 6" REDWOOD HEADERBOARDS AND 6" HIGH A.C. DIKE MAY BE REQUIRED WHERE FRACTIONAL PORTION OF STREET IS IMPROVED.
2. STRUCTURAL SECTIONS SHOWN IS MINIMUM, ACTUAL SECTION SHALL BE BASED ON "R" VALUE TESTS AND STANDARD PLAN ST-11.
3. * 8' WIDTH OF PARKWAY MAY BE PERMITTED BY THE CITY ENGINEER IN EXTENUATING CIRCUMSTANCES OF EXISTING RIGHT-OF-WAY WIDTH AND BUILDING SET BACK.
4. MINIMUM CENTER LINE RADIUS - 500 FT. OR AS DIRECTED BY THE CITY ENGINEER.

LOCAL INDUSTRIAL STREET

CITY ENGINEER
COMMUNITY DEVELOPMENT DEPARTMENT
ENGINEERING DIVISION

12-8-05
PLAN APPROVAL DATE

REVISIONS
DEC. 2005

REGISTERED PROFESSIONAL ENGINEER
BRUCE A. WEBBER
C043156
Exp. 3-31-2006
CIVIL
STATE OF CALIFORNIA

CITY OF REEDLEY
ST-1B

NOT TO SCALE

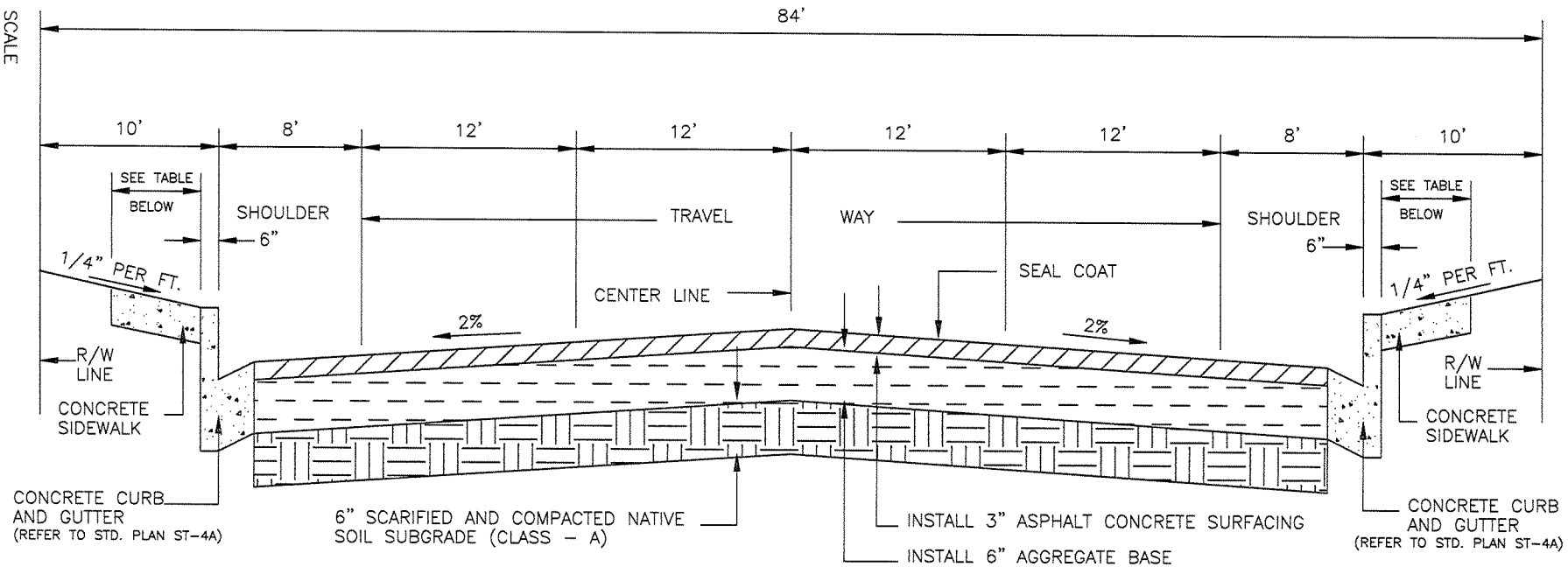

ARTERIAL or COLLECTOR STREET

FOUR LANE UNDIVIDED

SIDEWALK WIDTH:

RESIDENTIAL	–	4'–0"
INDUSTRIAL	–	4'–0"
COMMERCIAL	–	9'–6"

NOTES:

1. A MINIMUM CENTER LINE RADIUS OF CURVATURE FOR ARTERIAL AND COLLECTOR STREETS IS 1,000 FEET, UNLESS OTHERWISE DIRECTED BY THE CITY ENGINEER.
2. 2" x 6" REDWOOD HEADERBOARDS AND 6" HIGH A.C. DIKE MAY BE REQUIRED WHERE FRACTIONAL PORTION OF STREET IS IMPROVED.
3. STRUCTURAL SECTION SHOWN IS MINIMUM, ACTUAL SECTION SHALL BE BASED ON "R" VALUE TESTS AND STANDARD PLAN ST–11
4. THE INTERSECTION AREAS SHALL RECEIVE SPECIAL CONSIDERATION AS TO RIGHT OF WAY WIDTHS, PAVING WIDTHS & OTHER DETAILS OF DESIGN.

REGISTERED PROFESSIONAL ENGINEER BRUCE A. WEGBER C043156 Exp. 3-31-2006 CIVIL STATE OF CALIFORNIA

ARTERIAL OR COLLECTOR STREET

CITY ENGINEER
PUBLIC WORKS DEPARTMENT
ENGINEERING DIVISION

12-5-05
PLAN APPROVAL DATE

REVISIONS

NOV. 2005

CITY OF REEDLEY

ST–2A

MAJOR AND ARTERIAL STREETS

4 LANE DIVIDED

NOT TO SCALE

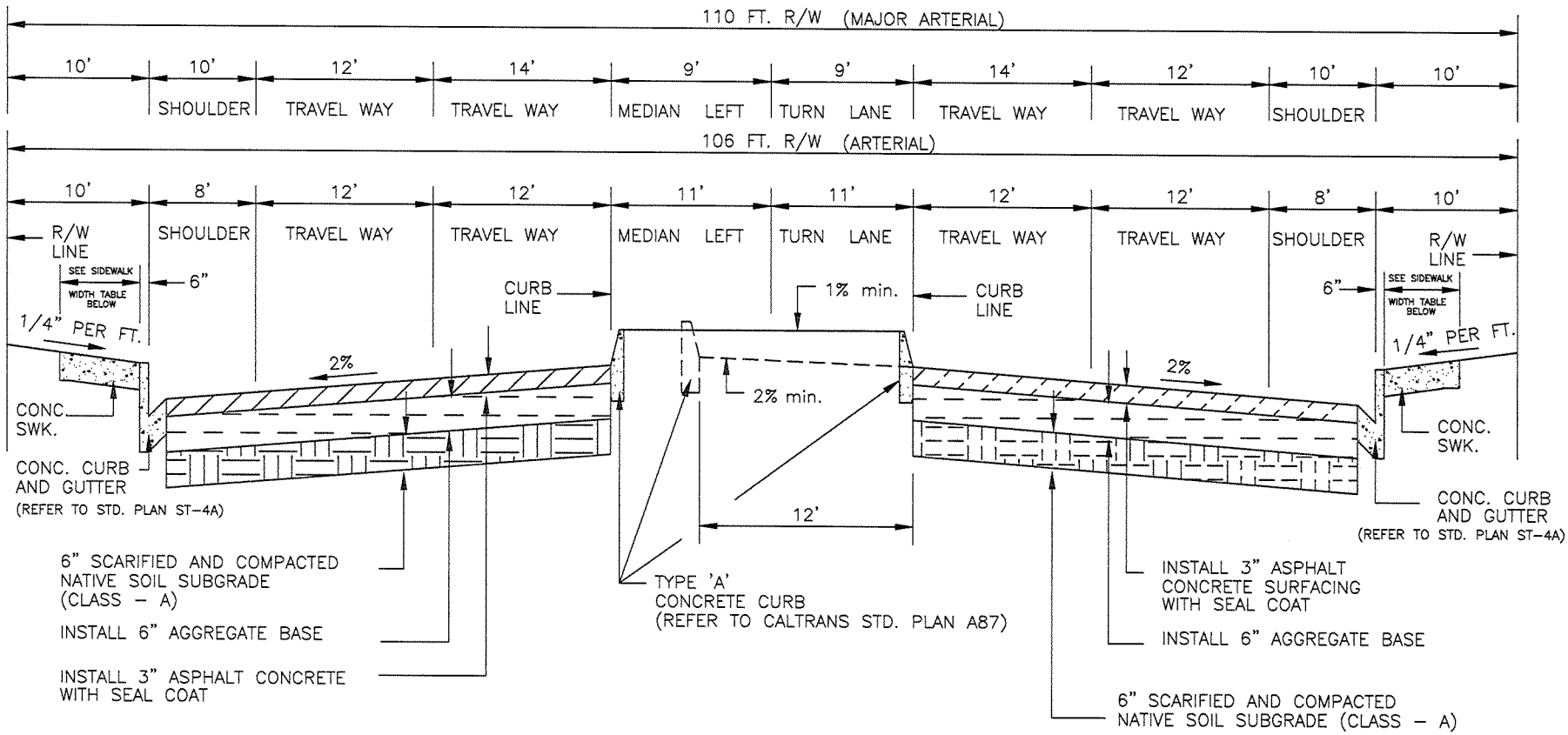

SIDEWALK WIDTH:

RESIDENTIAL	-	4'-0"
INDUSTRIAL	-	4'-0"
COMMERCIAL	-	9'-6"

NOTES:

1. 2" x 6" REDWOOD HEADERBOARD MAY BE REQUIRED WHERE FRACTIONAL PORTION OF STREET IS IMPROVED.
2. STRUCTURAL SECTIONS SHOWN IS MINIMUM, ACTUAL SECTION SHALL BE BASED ON "R" VALUE TEST AND STANDARD PLAN ST-11.
3. A MINIMUM CENTER LINE RADIUS OF CURVATURE FOR MAJOR ARTERIAL AND ARTERIAL IS 1,000 FEET, UNLESS OTHERWISE DIRECTED BY THE CITY ENGINEER.
4. THE INTERSECTION AREAS SHALL RECEIVE SPECIAL CONSIDERATION AS TO RIGHT OF WAY WIDTHS, PAVING WIDTHS AND OTHER DETAILS OF DESIGN. (ORD. 401; 9-19-67)

REGISTERED PROFESSIONAL ENGINEER BRUCE A. WEBBER C043156 Exp. 3-31-2006 CIVIL STATE OF CALIFORNIA

CITY ENGINEER
PUBLIC WORKS DEPARTMENT
ENGINEERING DIVISION

PLAN APPROVAL DATE 12-5-05

REVISIONS

NOV. 2005

CITY OF REEDLEY

ST-2B

NOT TO SCALE

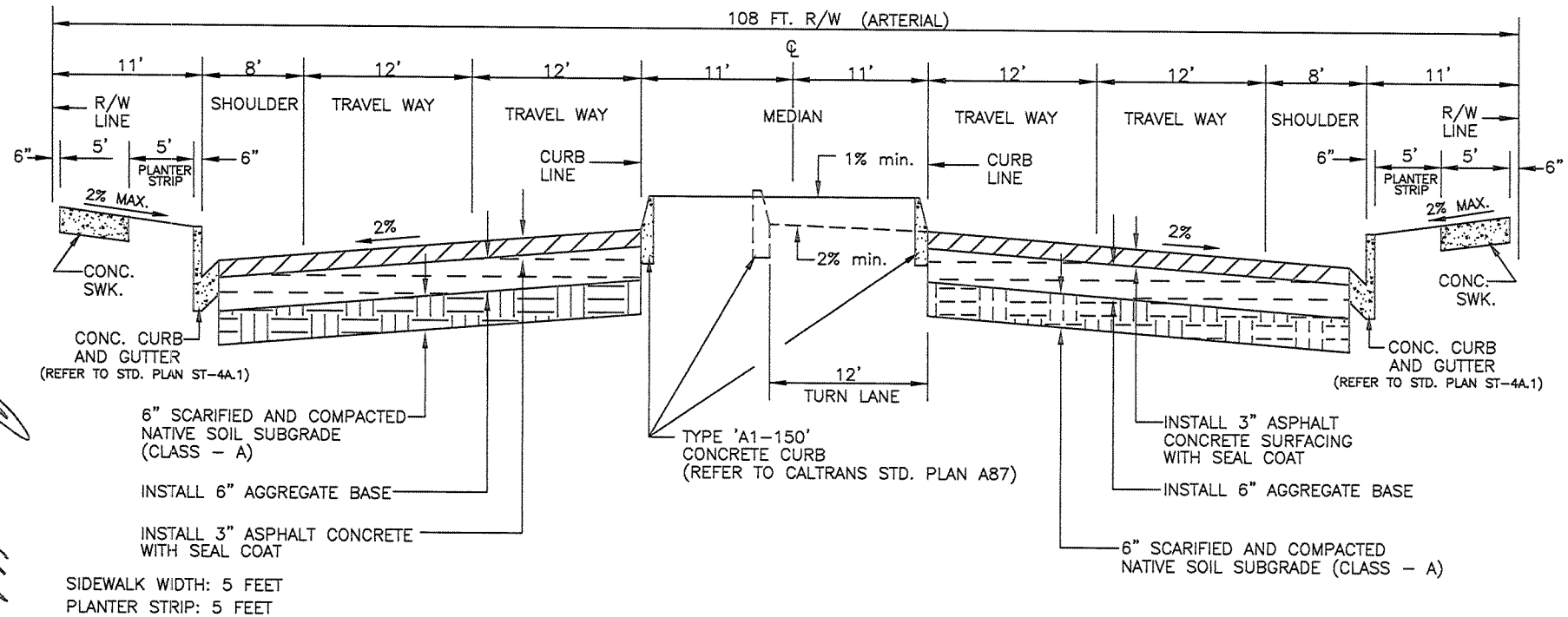

NOTES:

1. 2" x 6" REDWOOD HEADERBOARD MAY BE REQUIRED WHERE FRACTIONAL PORTION OF STREET IS IMPROVED.
2. STRUCTURAL SECTIONS SHOWN IS MINIMUM, ACTUAL SECTION SHALL BE BASED ON "R" VALUE TEST AND STANDARD PLAN ST-11.
3. A MINIMUM CENTER LINE RADIUS OF CURVATURE FOR AN ARTERIAL STREET IS 1,000 FEET, UNLESS OTHERWISE DIRECTED BY THE CITY ENGINEER.
4. THE INTERSECTION AREAS SHALL RECEIVE SPECIAL CONSIDERATION AS TO RIGHT OF WAY WIDTHS, PAVING WIDTHS AND OTHER DETAILS OF DESIGN. (ORD. 401; 9-19-67)

REGISTERED PROFESSIONAL ENGINEER
BRUCE A. WEBBER
C043156
Exp. 3-31-2008
CIVIL
STATE OF CALIFORNIA

ARTERIAL STREETS 4 LANE DIVIDED WITHIN REEDLEY SPECIFIC PLAN AREA

CITY ENGINEER
PUBLIC WORKS DEPARTMENT
ENGINEERING DIVISION

5-15-07
PLAN APPROVAL DATE

REVISIONS

MAR. 2006, MAY 2007

CITY OF REEDLEY

ST-2B.1

NOT TO SCALE

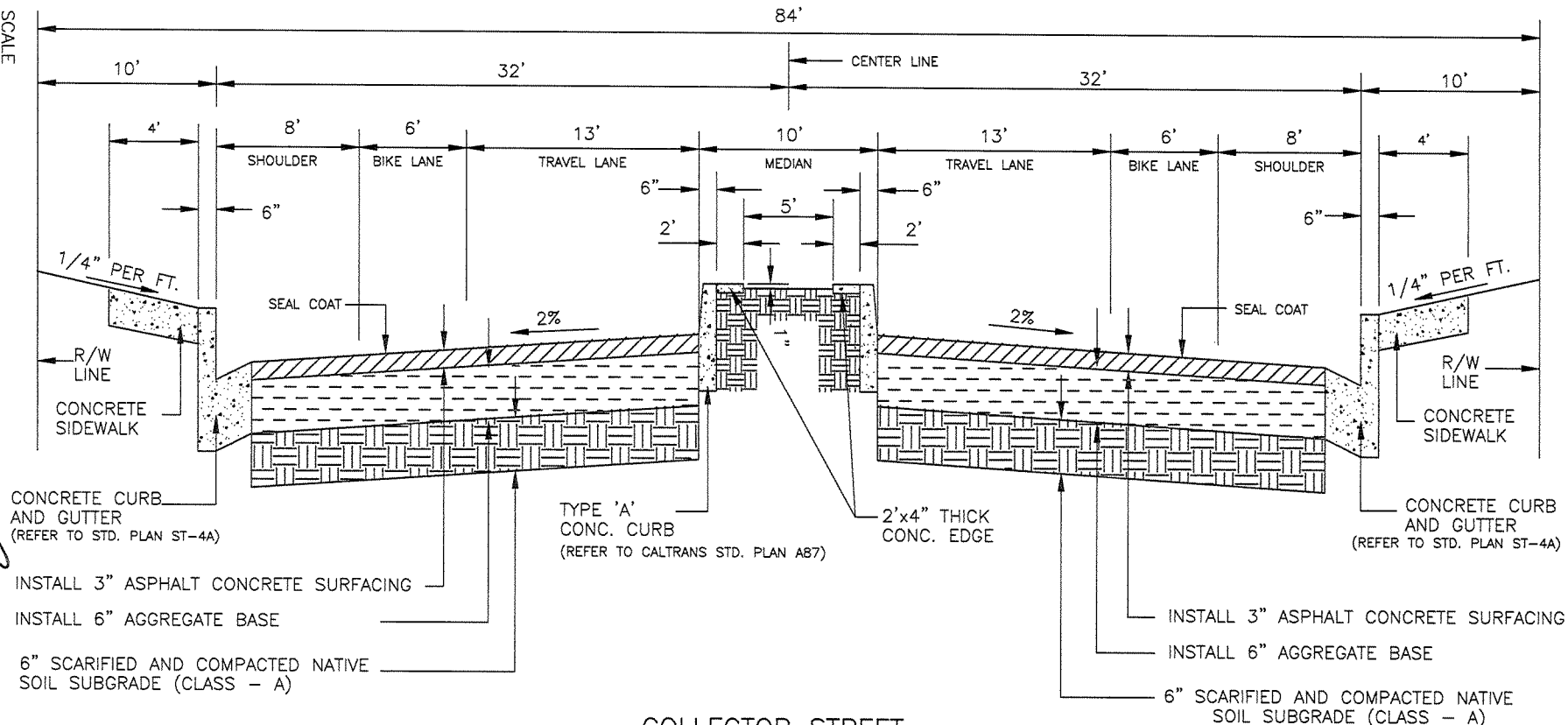

COLLECTOR STREET
TWO LANE DIVIDED

NOTES:

1. A MINIMUM CENTER LINE RADIUS OF CURVATURE FOR ARTERIAL AND COLLECTOR STREETS IS 1,000 FEET, UNLESS OTHERWISE DIRECTED BY THE CITY ENGINEER.
2. 2" x 6" REDWOOD HEADERBOARDS MAY BE REQUIRED WHERE FRACTIONAL PORTION OF STREET IS IMPROVED.
3. STRUCTURAL SECTION SHOWN IS MINIMUM, ACTUAL SECTION SHALL BE BASED ON "R" VALUE TESTS AND STANDARD PLAN ST-11.
4. MEDIAN SHALL BE LANDSCAPED AND IRRIGATION IMPROVEMENTS INSTALLED. THE CITY WILL BE RESPONSIBLE FOR THE COSTS OF PROVIDING DECORATIVE CONCRETE WITHIN THE MEDIAN AREA.
5. THE INTERSECTION AREAS SHALL RECEIVE SPECIAL CONSIDERATION AS TO RIGHT OF WAY WIDTHS. PAVING WIDTHS AND OTHER DETAILS OF DESIGN. (ORD. 401; 9-19-67)

REGISTERED PROFESSIONAL ENGINEER BRUCE A. WEBBER C043156 Exp. 3-31-2006 CIVIL STATE OF CALIFORNIA

COLLECTOR STREET
2 LANE DIVIDED

CITY ENGINEER
PUBLIC WORKS DEPARTMENT
ENGINEERING DIVISION

PLAN APPROVAL DATE

REVISIONS

NOV. 2005

CITY OF REEDLEY

ST-2C

NOT TO SCALE

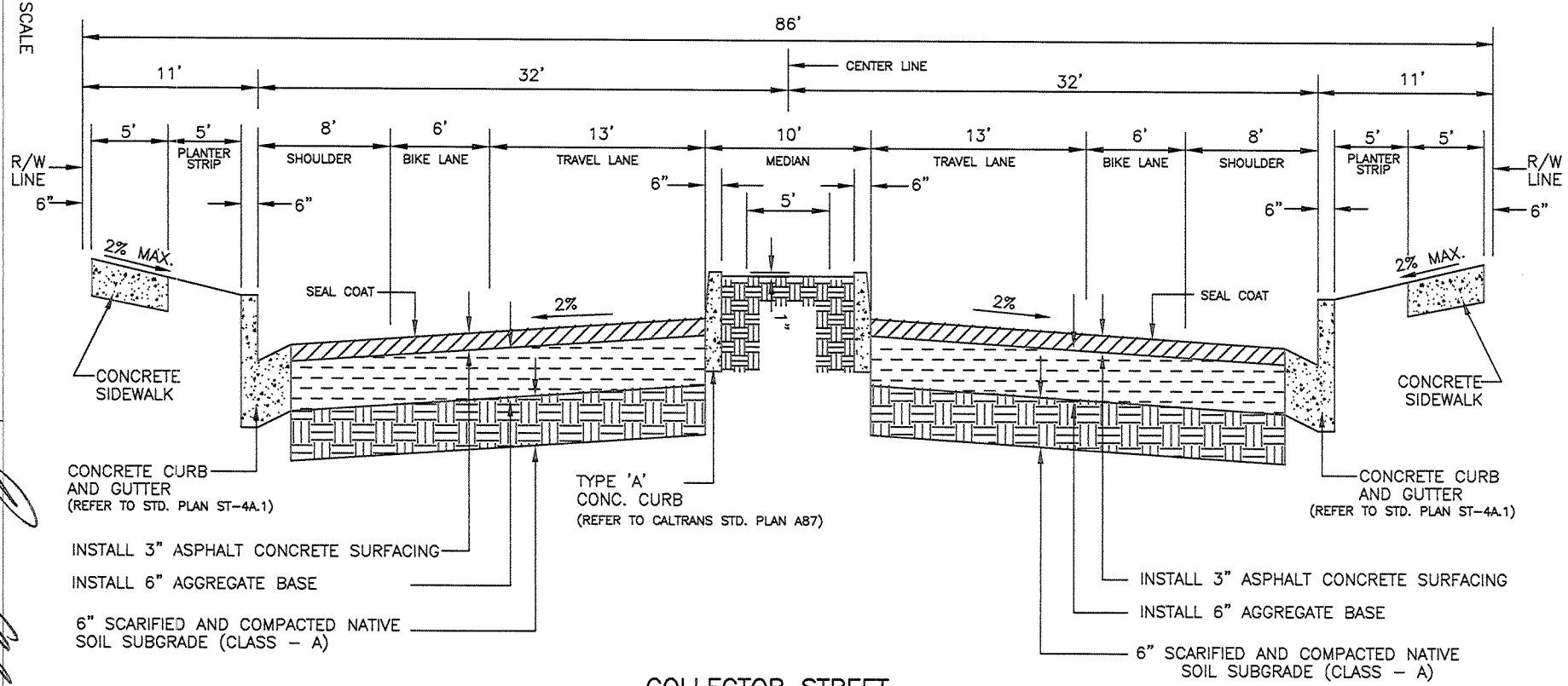

COLLECTOR STREET
TWO LANE DIVIDED

NOTES:

1. A MINIMUM CENTER LINE RADIUS OF CURVATURE FOR COLLECTOR STREETS IS 1,000 FEET, UNLESS OTHERWISE DIRECTED BY THE CITY ENGINEER.
2. 2" x 6" REDWOOD HEADERBOARDS MAY BE REQUIRED WHERE FRACTIONAL PORTION OF STREET IS IMPROVED.
3. STRUCTURAL SECTION SHOWN IS MINIMUM, ACTUAL SECTION SHALL BE BASED ON "R" VALUE TESTS AND STD. PLAN ST–11.
4. MEDIAN SHALL BE LANDSCAPED AND IRRIGATION IMPROVEMENTS INSTALLED.
5. THE INTERSECTION AREAS SHALL RECEIVE SPECIAL CONSIDERATION AS TO RIGHT OF WAY WIDTHS. PAVING WIDTHS AND OTHER DETAILS OF DESIGN. (ORD. 401; 9–19–67)

REGISTERED PROFESSIONAL ENGINEER
BRUCE A. WEBBER
C043156
Exp. 3-31-2008
CIVIL
STATE OF CALIFORNIA

CITY ENGINEER
PUBLIC WORKS DEPARTMENT
ENGINEERING DIVISION

5-14-07
PLAN APPROVAL DATE

REVISIONS

JAN. 2006, MAY 2007

COLLECTOR STREET
2 LANE DIVIDED – WITHIN
REEDLEY SPECIFIC PLAN AREA

CITY OF REEDLEY
ST–2C.1

FRONTAGE ROAD

NOT TO SCALE

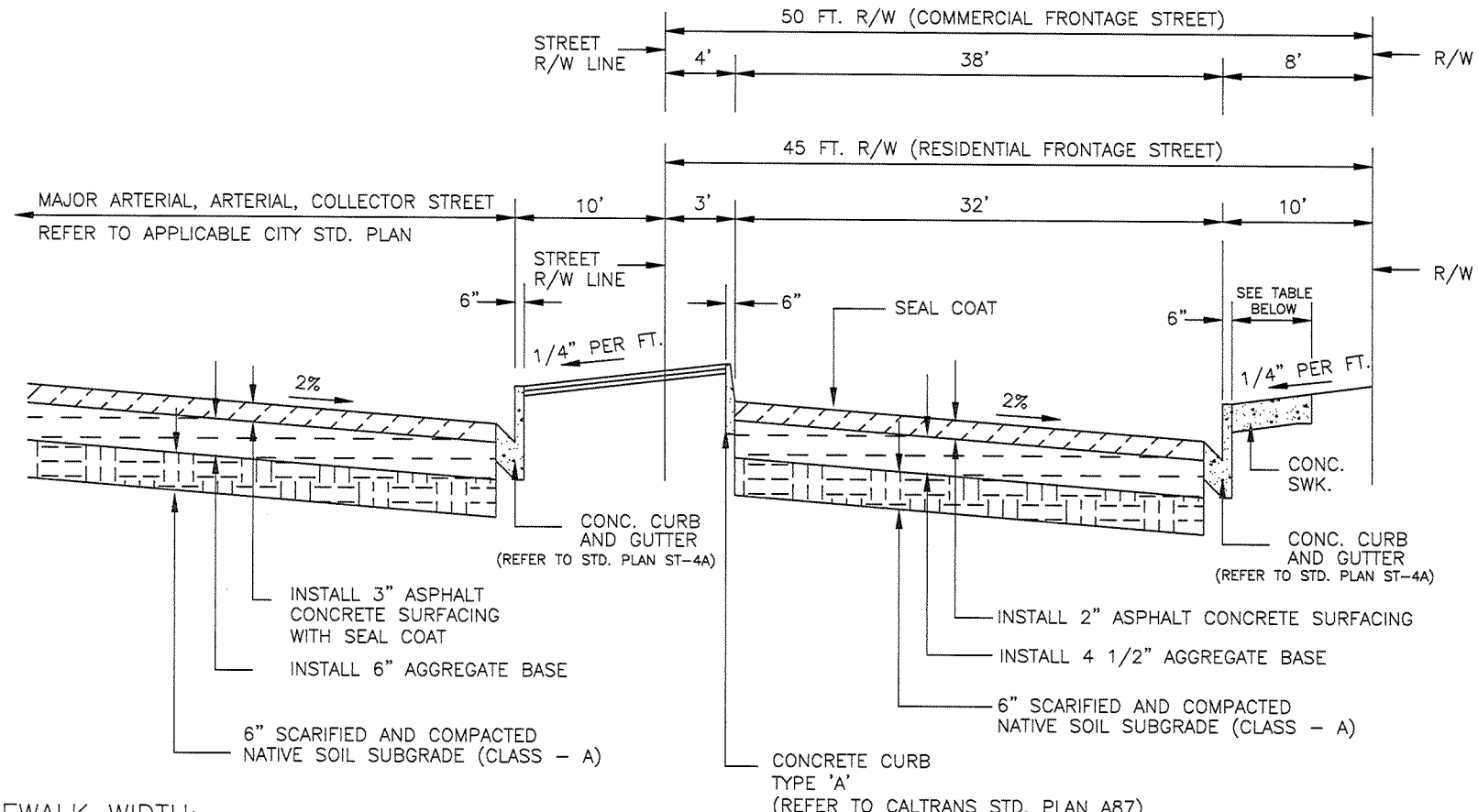

SIDEWALK WIDTH:

RESIDENTIAL - 4'-0"
INDUSTRIAL - 4'-0"
COMMERCIAL - 9'-6"

NOTES:

1. STRUCTURAL SECTION SHOWN IS MINIMUM, ACTUAL SECTION SHALL BE BASED ON "R" VALUE TEST AND STANDARD PLAN ST-11.
2. RADIUS OF CURVATURE SHALL RECEIVE SPECIAL CONSIDERATION AND SHALL ENTER 4-LANE STREETS THROUGH BULB TYPE INTERSECTION.
3. FRONTAGE STREETS SHALL RECEIVE SPECIAL CONSIDERATION WITHIN AN INTERSECTION AREA OF ANY MAJOR ARTERIAL, ARTERIAL OR COLLECTOR STREET AS TO DESIGN.
4. MEDIANS SHALL BE LANDSCAPED AND IRRIGATION IMPROVEMENTS INSTALLED.

REGISTERED PROFESSIONAL ENGINEER BRUCE A. WEBBER C043156 Exp. 3-31-2006 CIVIL STATE OF CALIFORNIA

CITY ENGINEER
PUBLIC WORKS DEPARTMENT
ENGINEERING DIVISION

PLAN APPROVAL DATE

REVISIONS

NOV. 2005

CITY OF REEDLEY

ST-2D

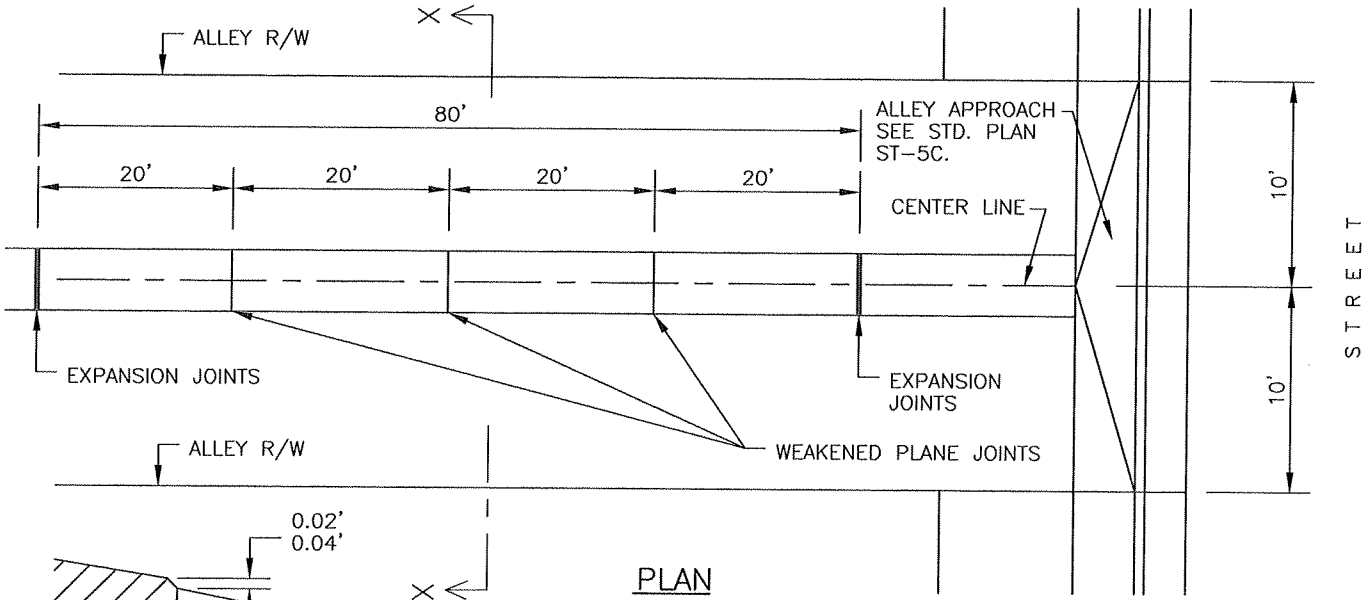

PLAN

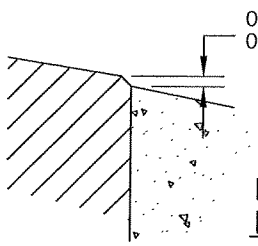

ENLARGED DETAIL

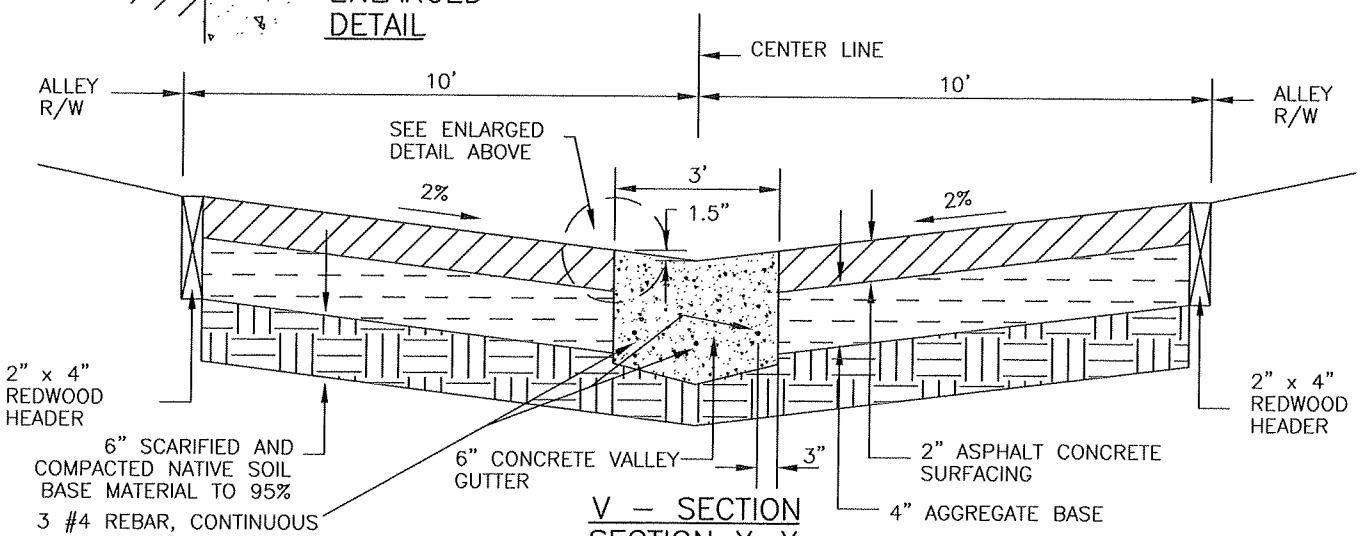

V – SECTION
SECTION X–X

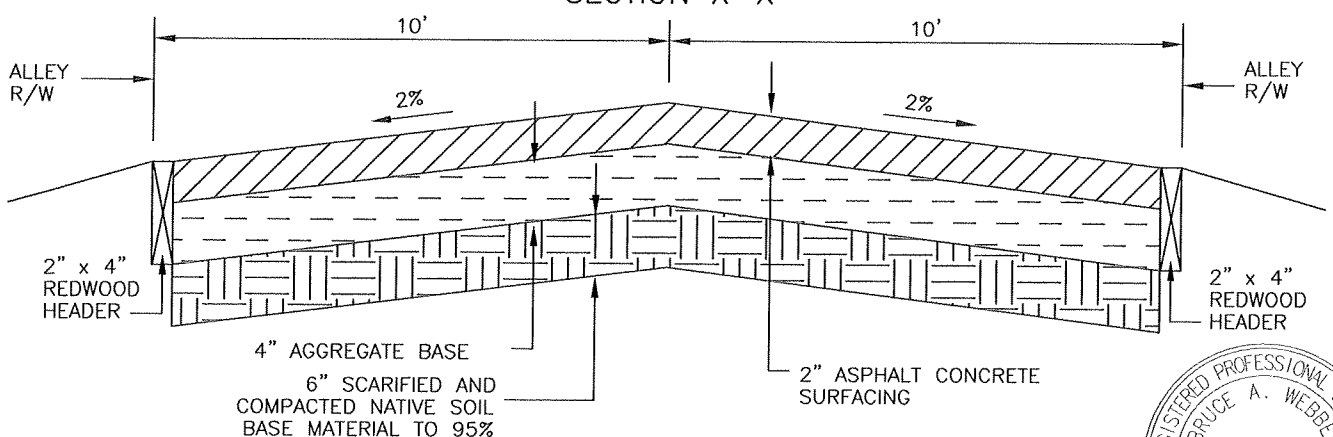

CROWN – SECTION

NOTES:

1. STRUCTURAL SECTIONS SHOWN ARE MINIMUM, MAY VARY DEPENDING ON "R" VALUE TESTS.
2. CROWN SECTION ALLOWED ONLY WITH SPECIAL APPROVAL FROM THE CITY ENGINEER.

NOT TO SCALE

REGISTERED PROFESSIONAL ENGINEER BRUCE A. WEBBER C043156 Exp. 3-31-2008 CIVIL STATE OF CALIFORNIA

ALLEY STRUCTURAL SECTION – RESIDENTIAL	CITY ENGINEER PUBLIC WORKS DEPARTMENT ENGINEERING DIVISION	1-25-07 PLAN APPROVAL DATE
	REVISIONS JAN. 2007	CITY OF REEDLEY ST–3

N:\AutoCad Drawing Files\Standard Plans\St-3.dwg

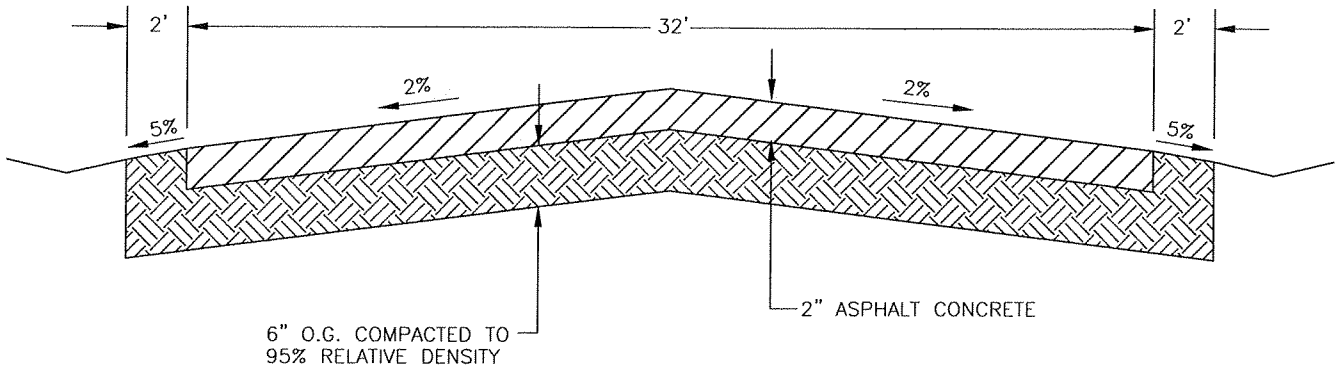

NOTES:

1. AS REQUIRED BY THE CITY ENGINEER FOR CIRCULATION.
2. PAVEMENT SECTION MAY BE REQUIRED TO BE FULL DEPTH DESIGNED SECTION IF IN ALIGNMENT WITH A FUTURE STREET.
3. A SECONDARY ACCESS EASEMENT OR STREET RIGHT-OF-WAY DEDICATION IS REQUIRED.

SECONDARY ACCESS ROAD

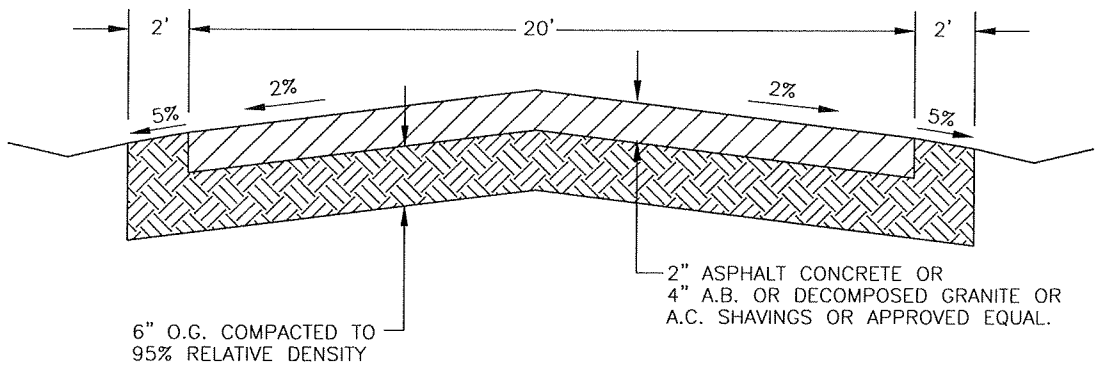

NOTES:

1. AS REQUIRED BY THE CITY OF REEDLEY FIRE DEPARTMENT & CITY ENGINEER FOR SECONDARY ACCESSES.
2. FOR EMERGENCY ACCESS, BARRICADES MAY BE REQUIRED TO RESTRICT ACCESS PER CITY STD PLAN ST-8B.
3. AN EMERGENCY/MAINTENANCE ACCESS EASEMENT DEDICATION IS REQUIRED.

MAINTENANCE & EMERGENCY ACCESS ROAD

NOT TO SCALE

SECONDARY & EMERGENCY/ MAINTENANCE ACCESS ROADS	Andrew J. Benetti CITY ENGINEER PUBLIC WORKS DEPARTMENT ENGINEERING DIVISION	02-04-04 PLAN APPROVAL DATE
	REVISIONS JAN 2004	CITY OF REEDLEY ST-3B

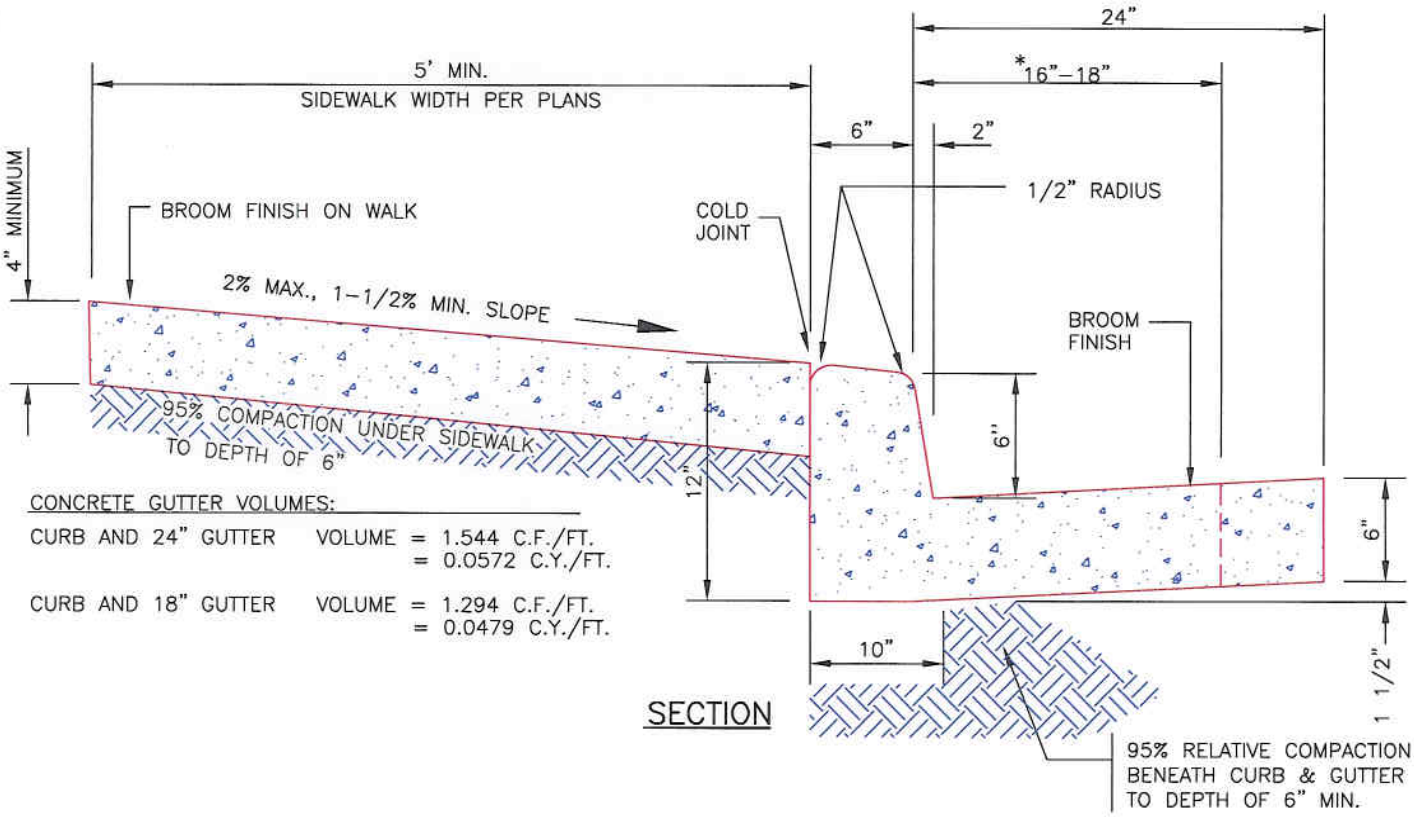

CONCRETE GUTTER VOLUMES:

CURB AND 24" GUTTER VOLUME = 1.544 C.F./FT.
= 0.0572 C.Y./FT.

CURB AND 18" GUTTER VOLUME = 1.294 C.F./FT.
= 0.0479 C.Y./FT.

SECTION

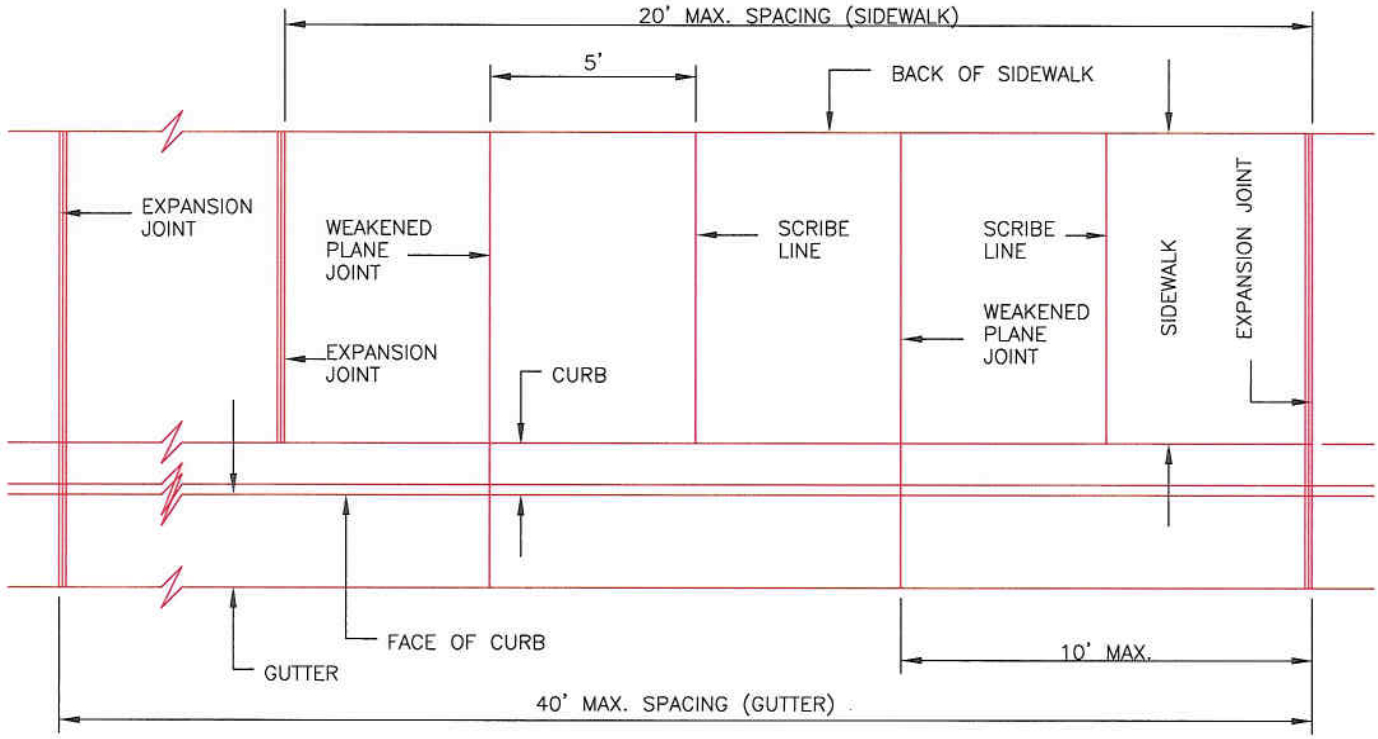

PLAN

NOTES:

*1. 16–18" GUTTER TO BE INSTALLED WHERE SIMILAR EXISTS OR AS DIRECTED BY THE CITY ENGINEER.
2. THE MAXIMUM SPACING FOR EXPANSION JOINTS FOR CURB AND GUTTER IS 40 FT.
3. WEAKENED PLANE JOINTS SHALL BE PLACED AT A SPACING OF 10 FT. FOR CURB, GUTTER & SIDEWALK.
4. THE MAXIMUM SPACING FOR EXPANSION JOINTS IN SIDEWALK IS 20 FT.
5. ALL CONCRETE USED IN SIDEWALK, CURB & GUTTER SHALL BE 6–SACK.

REGISTERED PROFESSIONAL ENGINEER BRUCE A. WEBBER C043156 Exp. 3-31-2008 CIVIL STATE OF CALIFORNIA

NOT TO SCALE

CURB, GUTTER AND SIDEWALK	CITY ENGINEER PUBLIC WORKS DEPARTMENT ENGINEERING DIVISION 12-27-07 PLAN APPROVAL DATE	
	REVISIONS DEC. 2007	CITY OF REEDLEY ST–4A

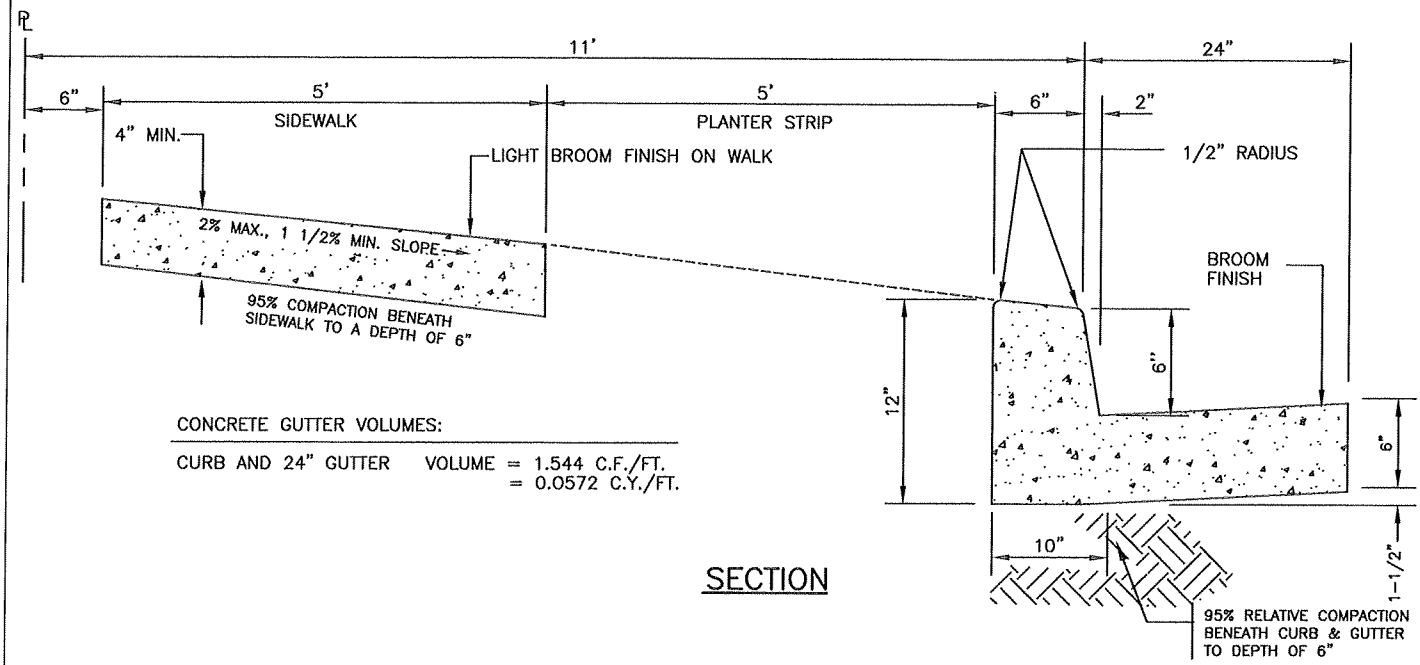

CONCRETE GUTTER VOLUMES:

CURB AND 24" GUTTER VOLUME = 1.544 C.F./FT.
= 0.0572 C.Y./FT.

SECTION

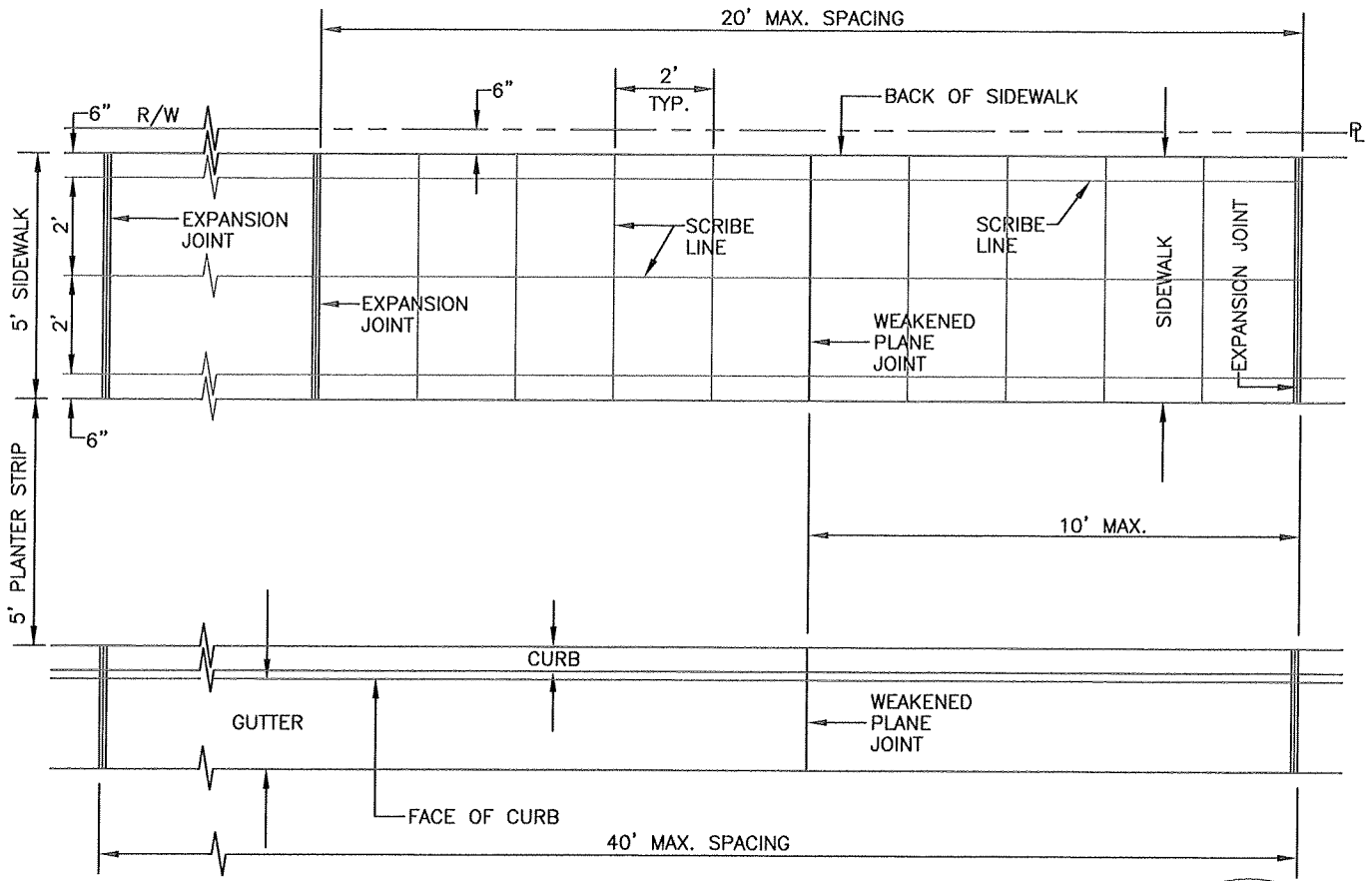

PLAN

NOTES:

1. THE MAXIMUM SPACING FOR EXPANSION JOINTS FOR CURB AND GUTTER IS 40 FT.
2. WEAKENED PLANE JOINTS SHALL BE PLACED AT A SPACING OF 10 FT. FOR CURB, GUTTER & SIDEWALK.
3. THE MAXIMUM SPACING FOR EXPANSION JOINTS IN SIDEWALK IS 20 FT.
4. STAMP CURB FACE AT SEWER & WATER LATERAL HOUSE BRANCH LOCATIONS PER CITY SPECIFICATIONS.
5. ALL CONCRETE USED IN SIDEWALK, CURB & GUTTER SHALL BE 6-SACK.

NOT TO SCALE

REGISTERED PROFESSIONAL ENGINEER
BRUCE A. WEBBER
C043156
Exp. 3-31-2008
CIVIL
STATE OF CALIFORNIA

CURB, GUTTER AND SIDEWALK WITHIN REEDLEY SPECIFIC PLAN AREA	CITY ENGINEER PUBLIC WORKS DEPARTMENT ENGINEERING DIVISION	5-15-07 PLAN APPROVAL DATE
	REVISIONS JAN. 2006, APR. 2007	CITY OF REEDLEY ST-4A.1

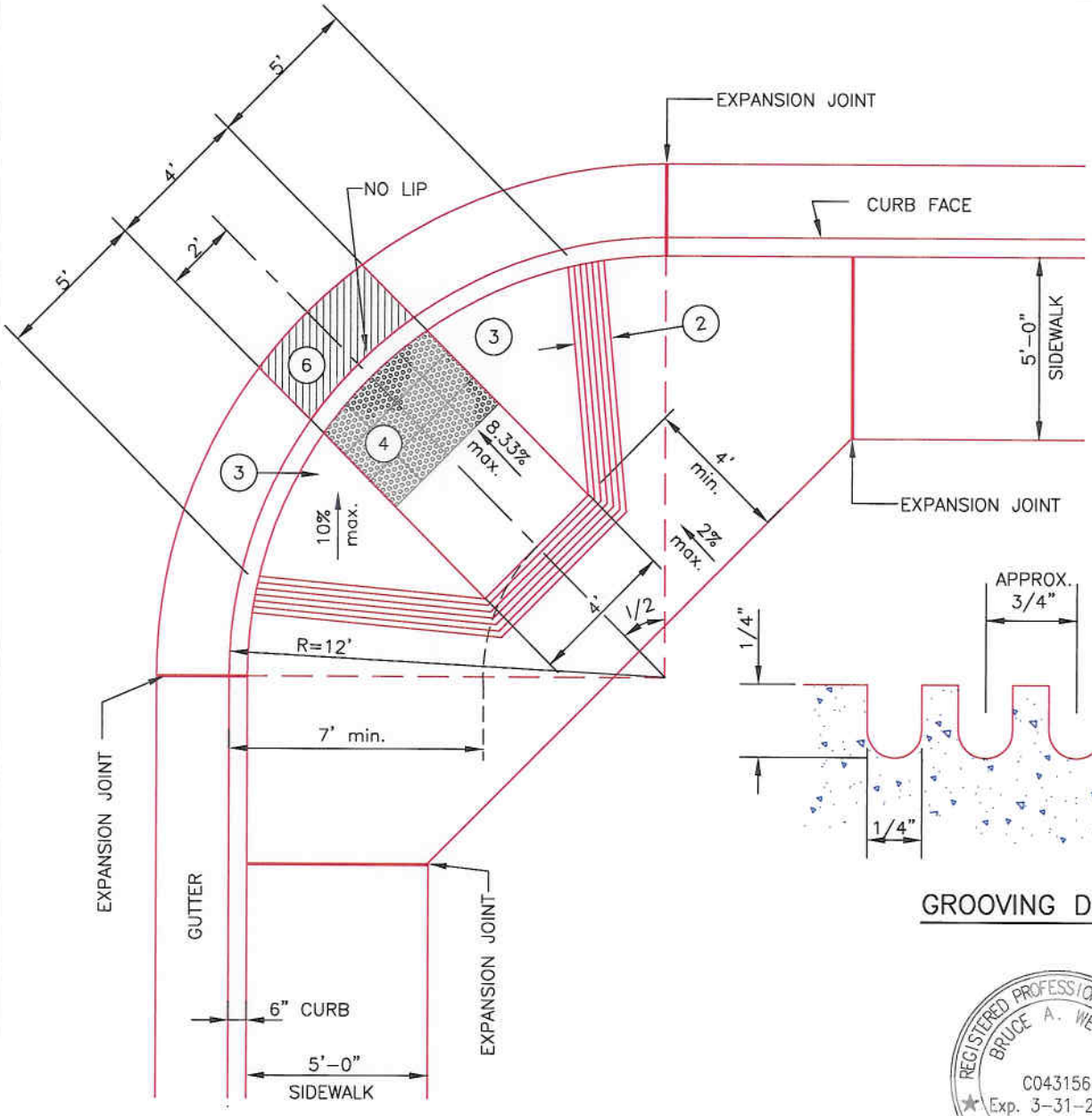

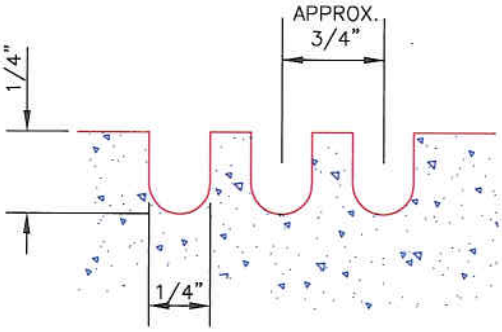

GROOVING DETAIL

NOTES:

1) CONTRACTOR SHALL BE RESPONSIBLE FOR MEETING ALL CURRENT ADA GUIDELINES.
2) 12" WIDE BORDER WITH 1/4" DEPTH AND WIDTH GROOVES APPROX. 3/4" O.C. SEE GROOVING DETAIL ABOVE.
3) BROOM-FINISH.
4) CONCRETE DETECTABLE WARNING DEVICE REQUIRED FULL WIDTH & 3' DEPTH OF RAMP. SEE DETACTABLE WARNING DETAIL AT LEFT.
5) RAMP THICKNESS SHALL BE 6".
6) GUTTER PAN TO BE FLATTENED TO 5% IN FRONT OF RAMP.
7) MEASUREMENT: RAMP INCLUDES LANDING AREA OUT TO EXPANSION JOINTS-SF, CURB & GUTTER-LF, SIDEWALK-SF

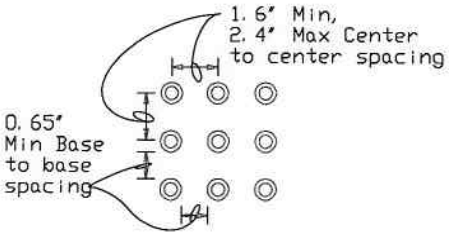

RAISED TRUNCATED DOME PATTERN (IN-LINE)

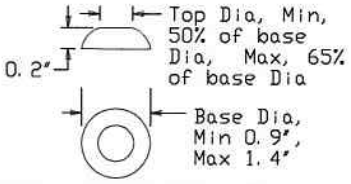

RAISED TRUNCATED DOME

DETECTABLE WARNING SURFACE

See Note 4

NOT TO SCALE

12 FT. RADIUS CURB RETURN WITH WHEELCHAIR RAMP

CITY ENGINEER
PUBLIC WORKS DEPARTMENT
ENGINEERING DIVISION

12-17-07
PLAN APPROVAL DATE

REVISIONS

DEC. 2007

CITY OF REEDLEY

ST-4B

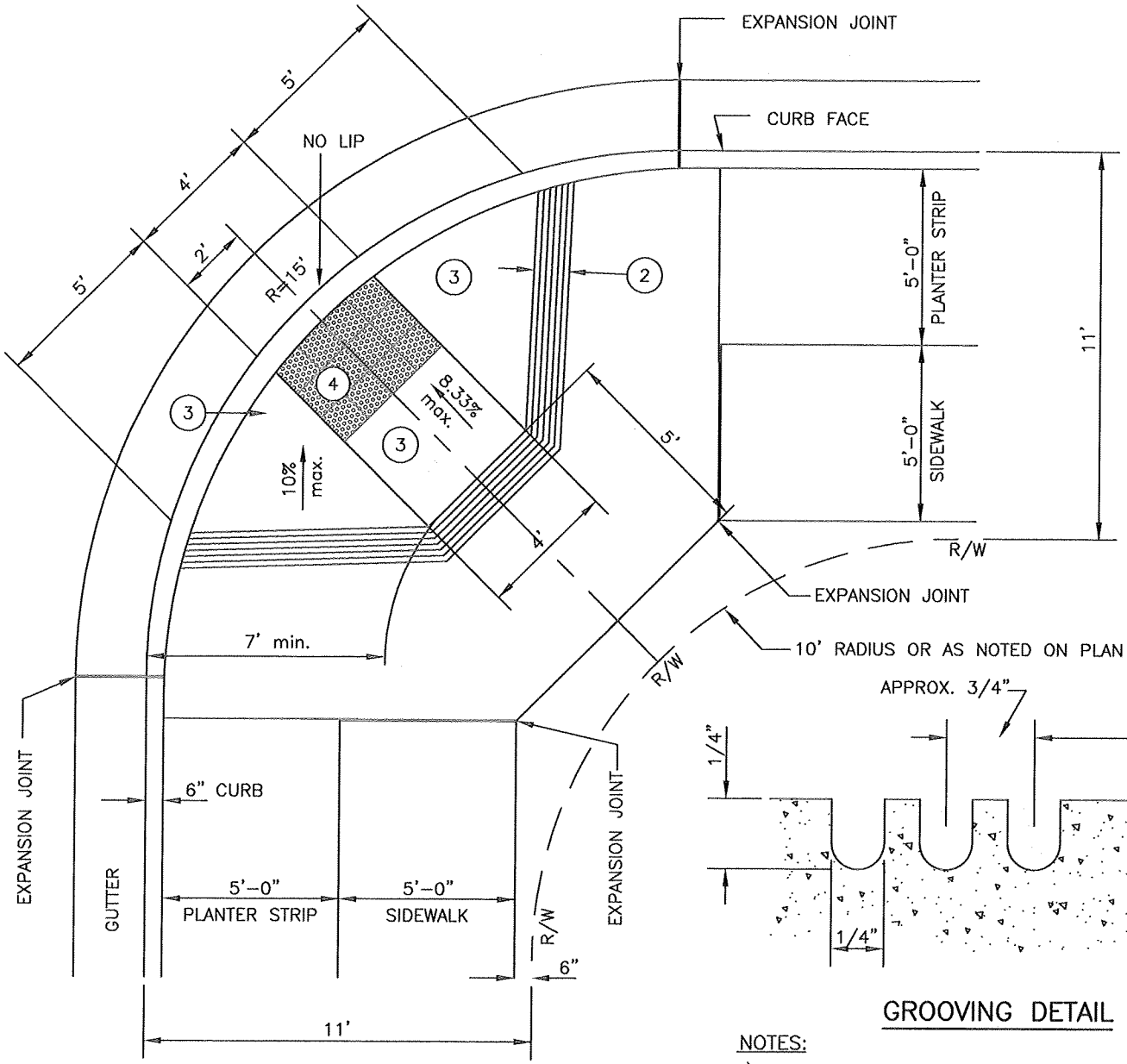

GROOVING DETAIL

NOTES:

1) CONTRACTOR SHALL BE RESPONSIBLE FOR MEETING ADA GUIDELINES.
2) 12" WIDE BORDER WITH 1/4" DEPTH AND WIDTH GROOVES APPROX. 3/4" O.C. SEE GROOVING DETAIL ABOVE.
3) ROUGHWOOD FLOAT OR BROOM-FINISH WITHIN WHEELCHAIR RAMP AREA.
4) DETECTABLE WARNING SURFACE REQUIRED THE FULL WIDTH & 3' DEPTH OF RAMP. SEE DETACTABLE WARNING DETAIL AT LEFT.
5) SIDEWALK AND RAMP THICKNESS SHALL BE 4" .
6) THIS CURB RETURN SHALL BE USED WITH KNUCKLE CURVE ONLY (SEE ST-7B)

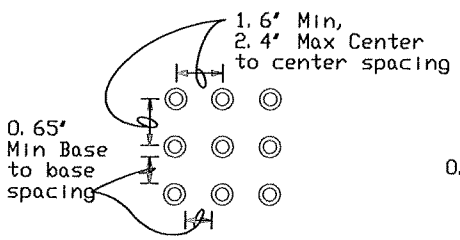

RAISED TRUNCATED DOME PATTERN (IN-LINE)

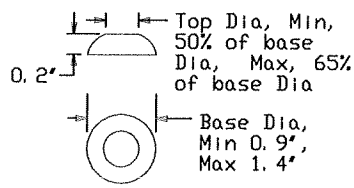

RAISED TRUNCATED DOME

DETECTABLE WARNING SURFACE

See Note 4

NOT TO SCALE

REGISTERED PROFESSIONAL ENGINEER
BRUCE A. WEBBER
C043156
Exp. 3-31-2008
CIVIL
STATE OF CALIFORNIA

15 FT. RADIUS CURB RETURN AND SIDEWALK WITH WHEELCHAIR RAMP WITHIN REEDLEY SPECIFIC PLAN AREA

CITY ENGINEER
PUBLIC WORKS DEPARTMENT
ENGINEERING DIVISION

6-28-07
PLAN APPROVAL DATE

REVISIONS
JAN. 2007, MAY 2007

CITY OF REEDLEY
ST-4B.1

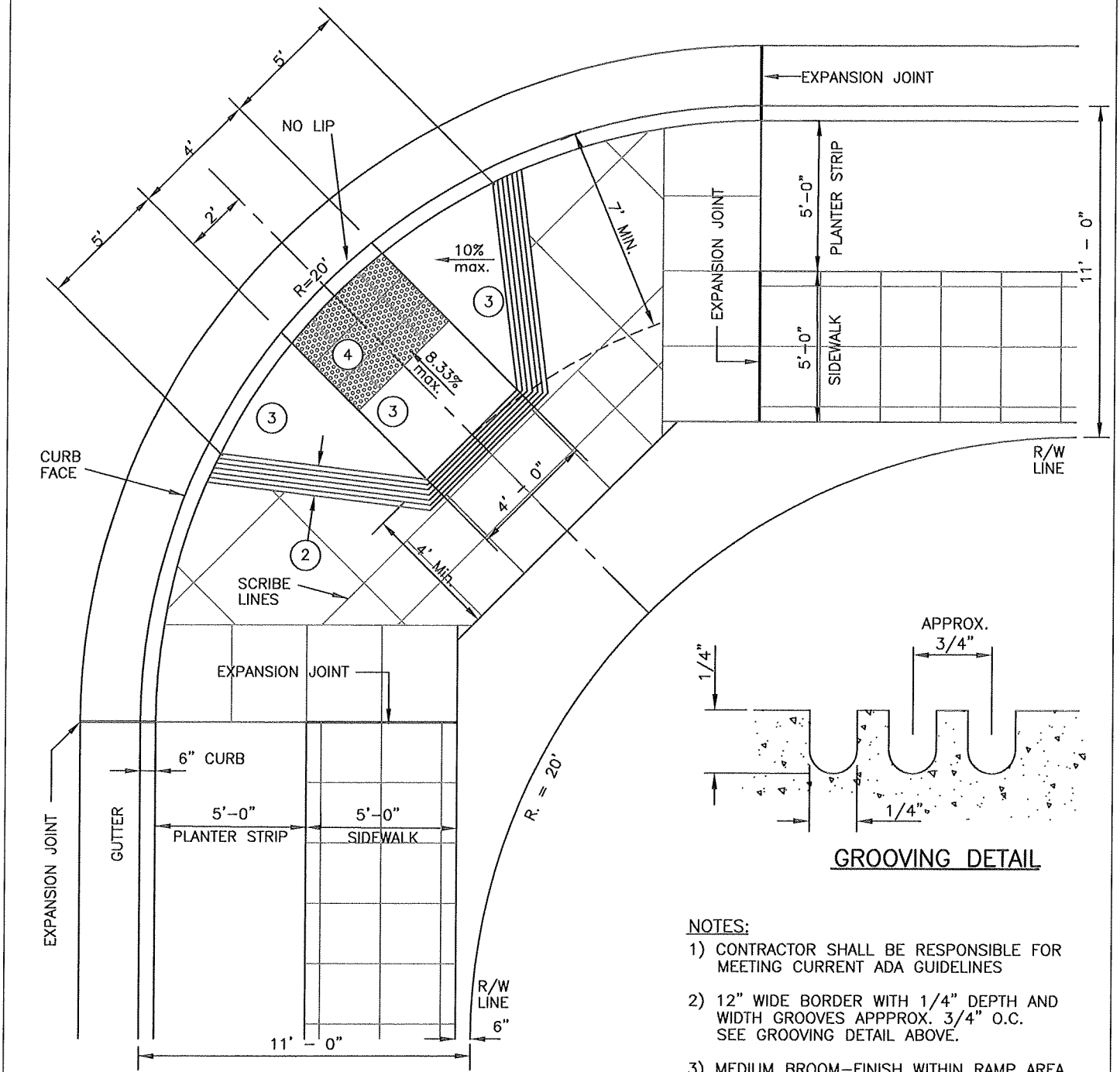

GROOVING DETAIL

NOTES:

1) CONTRACTOR SHALL BE RESPONSIBLE FOR MEETING CURRENT ADA GUIDELINES
2) 12" WIDE BORDER WITH 1/4" DEPTH AND WIDTH GROOVES APPPROX. 3/4" O.C. SEE GROOVING DETAIL ABOVE.
3) MEDIUM BROOM-FINISH WITHIN RAMP AREA.
4) DETECTABLE WARNING SURFACE REQUIRED THE FULL WIDTH & 3' DEPTH OF RAMP. SEE DETACTABLE WARNING DETAIL AT LEFT.
5) SIDEWALK AND RAMP THICKNESS SHALL BE 4".

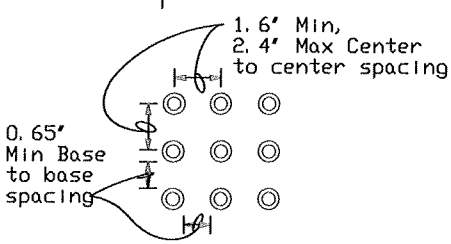

RAISED TRUNCATED DOME PATTERN (IN-LINE)

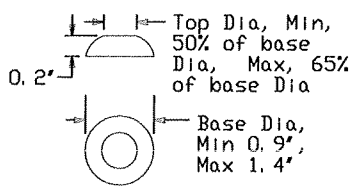

RAISED TRUNCATED DOME

DETECTABLE WARNING SURFACE

See Note 4

NOT TO SCALE

REGISTERED PROFESSIONAL ENGINEER
BRUCE A. WEBBER
C043156
Exp. 3-31-2008
CIVIL
STATE OF CALIFORNIA

20 FT. RADIUS
CURB RETURN AND SIDEWALK
WITH WHEELCHAIR RAMP WITHIN
REEDLEY SPECIFIC PLAN AREA

CITY ENGINEER
PUBLIC WORKS DEPARTMENT
ENGINEERING DIVISION

6-28-07
PLAN APPROVAL DATE

REVISIONS
JAN. 2007, MAY 2007

CITY OF REEDLEY
ST-4B.2

N:\AutoCad Drawing Files\Standard Plans\St-4b2.dwg

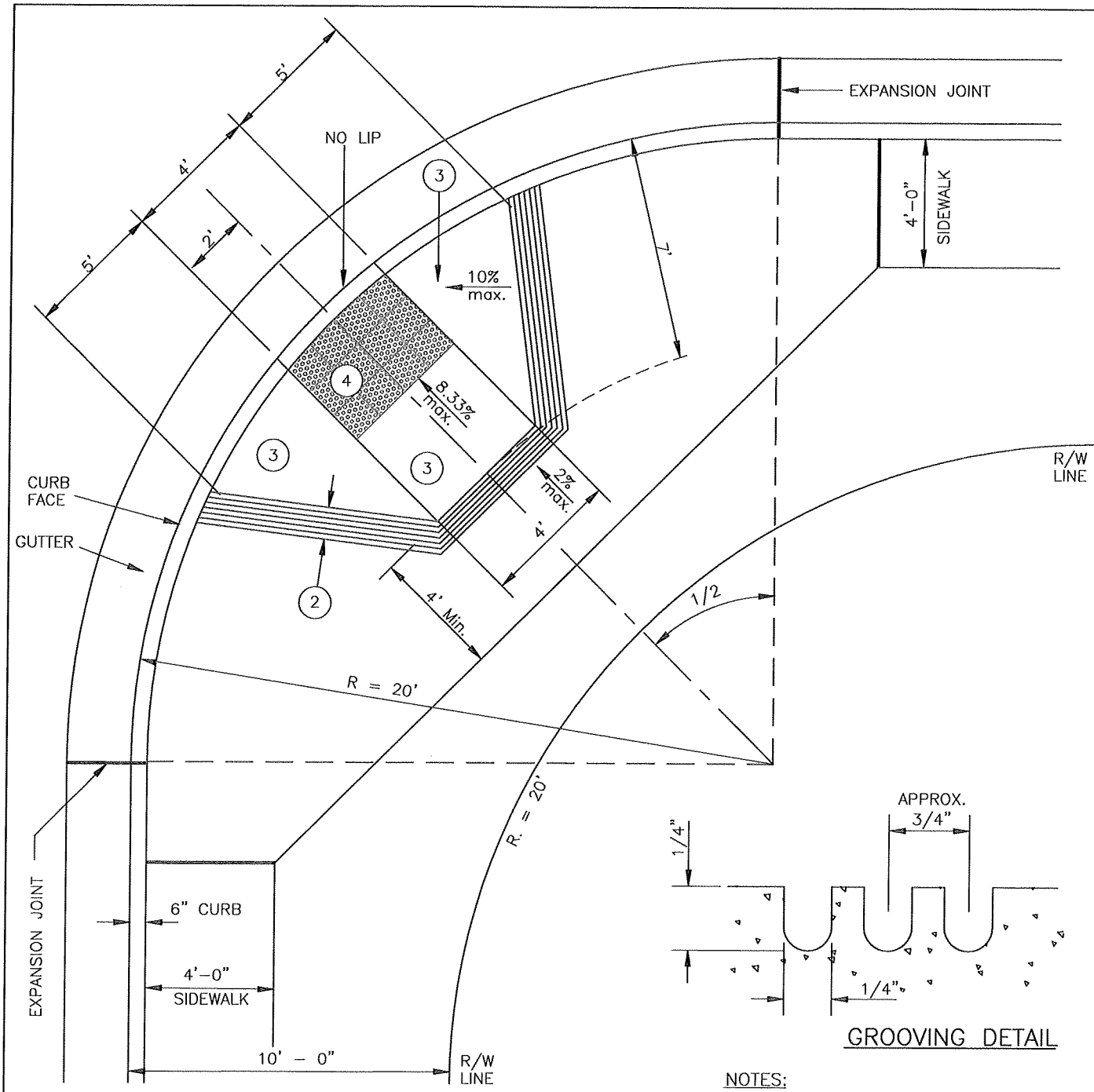

GROOVING DETAIL

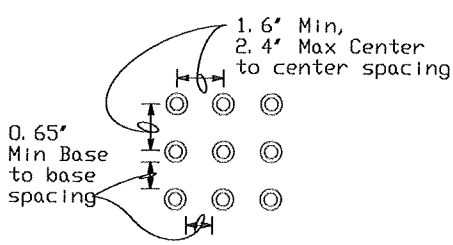

RAISED TRUNCATED DOME PATTERN (IN-LINE)

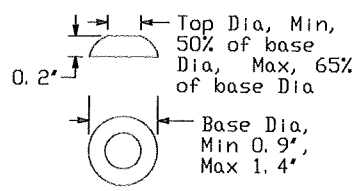

RAISED TRUNCATED DOME

DETECTABLE WARNING SURFACE

See Note 4

NOTES:

1) CONTRACTOR SHALL BE RESPONSIBLE FOR MEETING ALL CURRENT ADA GUIDELINES.
2) 12" WIDE BORDER WITH 1/4" DEPTH AND WIDTH GROOVES APPROX. 3/4" O.C. SEE GROOVING DETAIL ABOVE.
3) MEDIUM BROOM-FINISH.
4) DETECTABLE WARNING SURFACE REQUIRED THE FULL WIDTH & 3' DEPTH OF RAMP. SEE DETACTABLE WARNING DETAIL AT LEFT.
5) SIDEWALK AND RAMP THICKNESS SHALL BE 4".
6) INTERSECTIONS INVOLVING RESIDENTIAL STREETS OTHER THAN KNUCKLE CURVES.

NOT TO SCALE

20 FT. RADIUS CURB RETURN AND SIDEWALK WITH WHEELCHAIR RAMP	CITY ENGINEER PUBLIC WORKS DEPARTMENT ENGINEERING DIVISION	07-26-04 PLAN APPROVAL DATE
	REVISIONS JULY 2004	CITY OF REEDLEY ST-4C

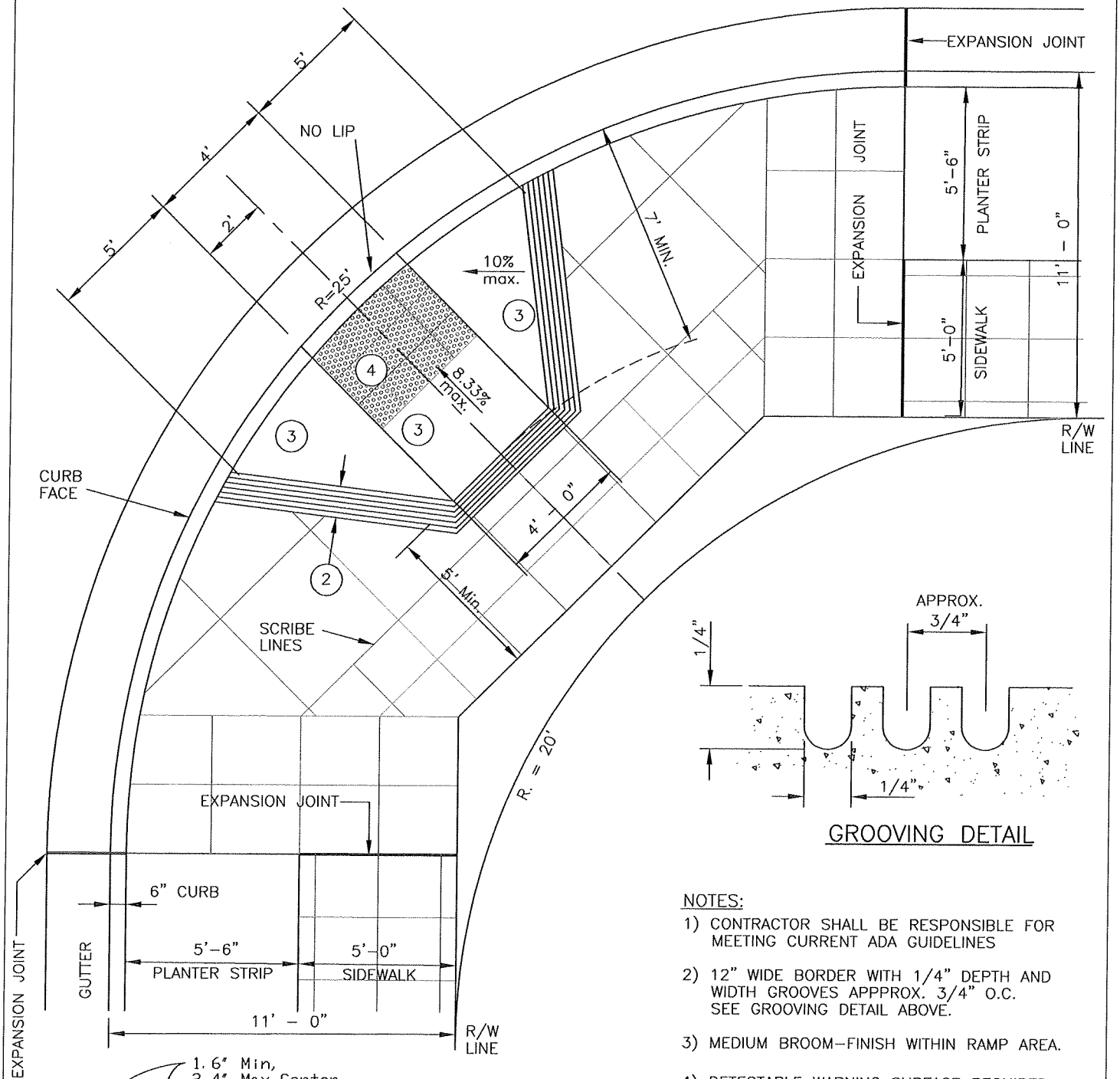

GROOVING DETAIL

NOTES:

1) CONTRACTOR SHALL BE RESPONSIBLE FOR MEETING CURRENT ADA GUIDELINES
2) 12" WIDE BORDER WITH 1/4" DEPTH AND WIDTH GROOVES APPPROX. 3/4" O.C. SEE GROOVING DETAIL ABOVE.
3) MEDIUM BROOM-FINISH WITHIN RAMP AREA.
4) DETECTABLE WARNING SURFACE REQUIRED THE FULL WIDTH & 3' DEPTH OF RAMP. SEE DETACTABLE WARNING DETAIL AT LEFT.
5) SIDEWALK AND RAMP THICKNESS SHALL BE 4".

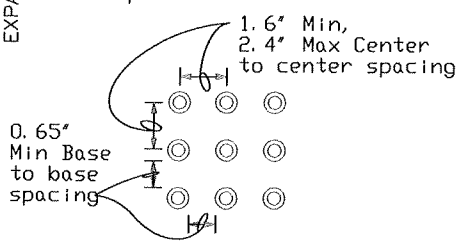

RAISED TRUNCATED DOME PATTERN (IN-LINE)

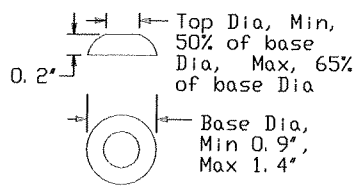

RAISED TRUNCATED DOME

DETECTABLE WARNING SURFACE

See Note 4

NOT TO SCALE

REGISTERED PROFESSIONAL ENGINEER
BRUCE A. WEBBER
C043156
Exp. 3-31-2008
CIVIL
STATE OF CALIFORNIA

25 FT. RADIUS
CURB RETURN AND SIDEWALK
WITH WHEELCHAIR RAMP WITHIN
REEDLEY SPECIFIC PLAN AREA

CITY ENGINEER
PUBLIC WORKS DEPARTMENT
ENGINEERING DIVISION

1-29-07
PLAN APPROVAL DATE

REVISIONS
JAN. 2007

CITY OF REEDLEY
ST-4C.1

N:\AutoCad Drawing Files\Standard Plans\St-4c1.dwg

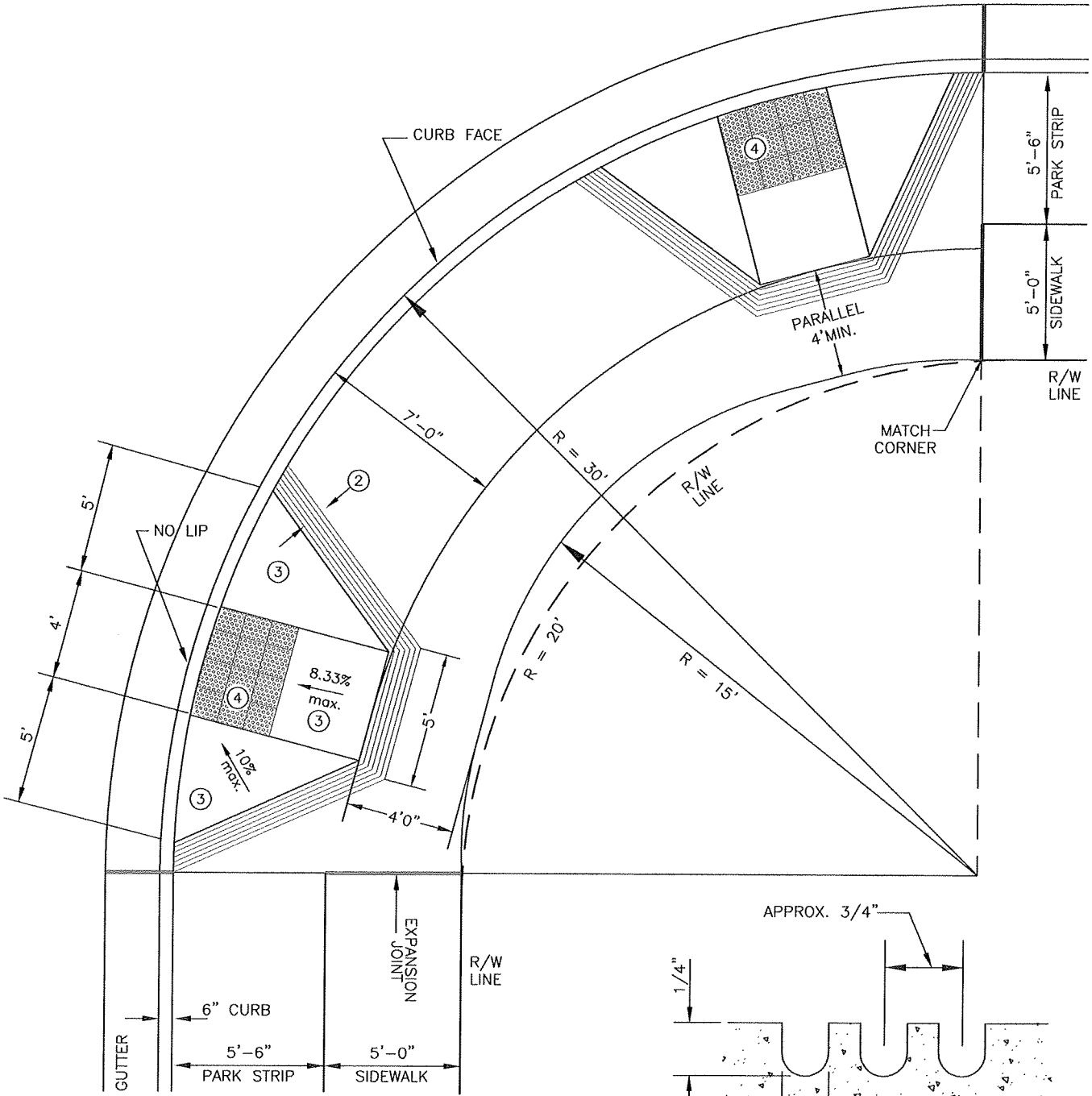

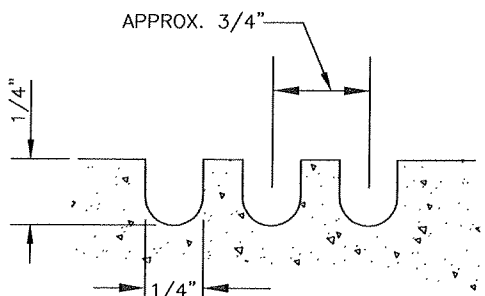

GROOVING DETAIL

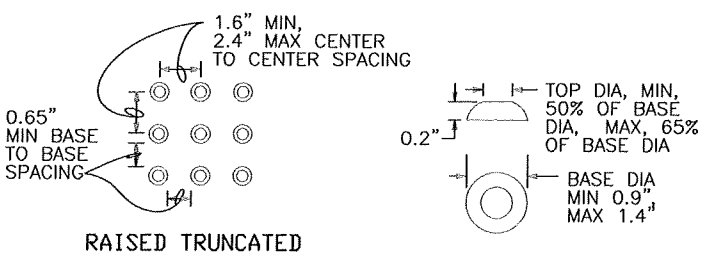

RAISED TRUNCATED DOME PATTERN (IN-LINE)

RAISED TRUNCATED DOME

DETECTABLE WARNING SURFACE

See Note 4

NOT TO SCALE

NOTES

1. CONTRACTOR SHALL BE RESPONSIBLE FOR MEETING ADA GUIDELINES.
2. 12" WIDE BORDER WITH 1/4" DEPTH AND WIDTH GROOVES APPROX, 3/4" O.C., SEE GROOVING DETAIL BELOW.
3. MEDIUM BROOM-FINISH.
4. DETECTABLE WARNING SURFACE REQUIRED THE FULL WIDTH & 3' DEPTH OF RAMP. SEE DETECTABLE WARNING DETAIL AT LEFT.
5. SIDEWALK AND RAMP THICKNESS SHALL BE 4".

REGISTERED PROFESSIONAL ENGINEER
BRUCE A. WEBBER
C043156
Exp. 3-31-2008
CIVIL
STATE OF CALIFORNIA

30 FT. RADIUS
CURB RETURN AND SIDEWALK
WITH WHEELCHAIR RAMP

Bruce Webber
CITY ENGINEER
PUBLIC WORKS DEPARTMENT
ENGINEERING DIVISION

1-25-07
PLAN APPROVAL DATE

REVISIONS:
JAN. 2007

DRAWN BY: C.TAMEZ

CITY OF REEDLEY
ST-4D

N:\AutoCad Drawing Files\Standard Plans\St-4d(R).dwg

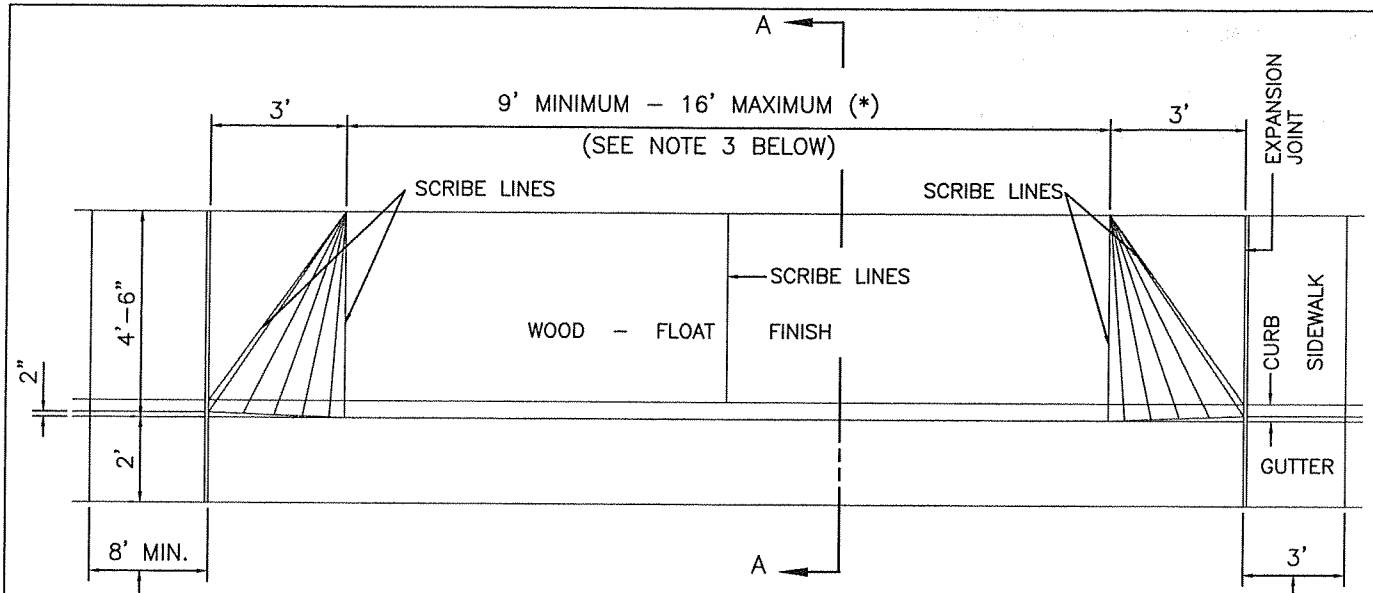

PLAN
n.t.s.

(*) WIDTHS ARE FOR DRIVEWAY THROAT OPENING
THROAT OPENING FOR 3 OR MORE CAR GARAGE REQUIRES APPROVAL FROM CITY ENGINEER.

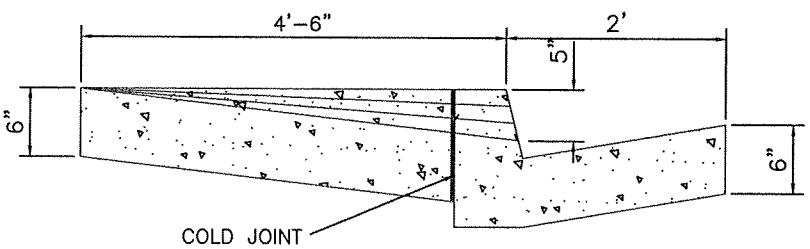

SECTION A–A
n.t.s.

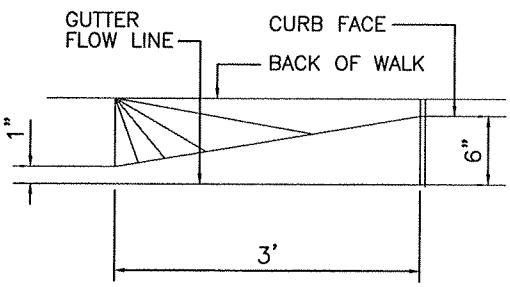

ELEVATION
n.t.s.

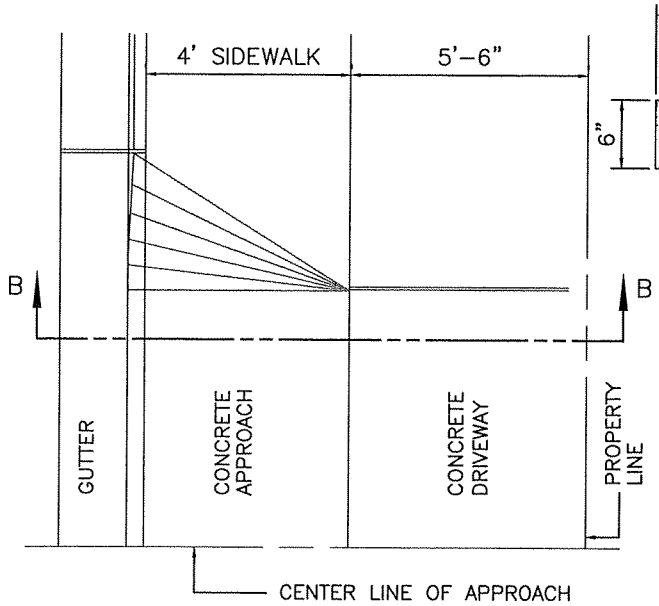

HALF PLAN
n.t.s.

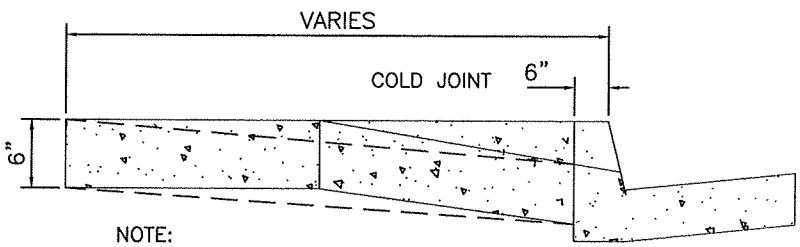

NOTE:
STRAIGHT SLOPE TO PROPERTY ALLOWED IN FULL WIDTH SIDEWALK.

SECTION B–B
n.t.s.

GENERAL NOTES:

1. MUST REMOVE ENTIRE CURB AND GUTTER WHEN RECONSTRUCTION IS REQUIRED.
2. NOT MORE THAN 60% OF LOT FRONTAGE MEASURED AT STREET SIDE (TOP OF CURB BETWEEN LOT LINES EXTENDED) MAY BE USED FOR DRIVEWAY OPENING.
3. ALL MULTIPLE RESIDENTIAL PROPERTIES TO HAVE ON–SITE REFUSE PICKUP SHALL INSTALL COMMERCIAL DRIVEWAY APPROACHES PER CITY OF REEDLEY STD. PLAN ST–5B.
4. CONCRETE FOR DRIVEWAY APPROACH SHALL BE CLASS "B" (5 SACK).
5. DEEP SCORE MARK IN CENTER OF APPROACH WHEN THROAT IS WIDER THEN 20 FT.
6. APPROACH, CURB AND GUTTER SUBGRADE COMPACTED TO 95%.
7. BROOM SWEEP FINISH ON DRIVEWAY APPROACH.
8. E.C.R. = END OF CURB RETURN.

RESIDENTIAL DRIVEWAY APPROACH	Andrew J. Benelli CITY ENGINEER PUBLIC WORKS DEPARTMENT ENGINEERING DIVISION	08-31-04 PLAN APPROVAL DATE
	REVISIONS: MAY 2001 APRIL 2003 AUG 2004	CITY OF REEDLEY ST–5A

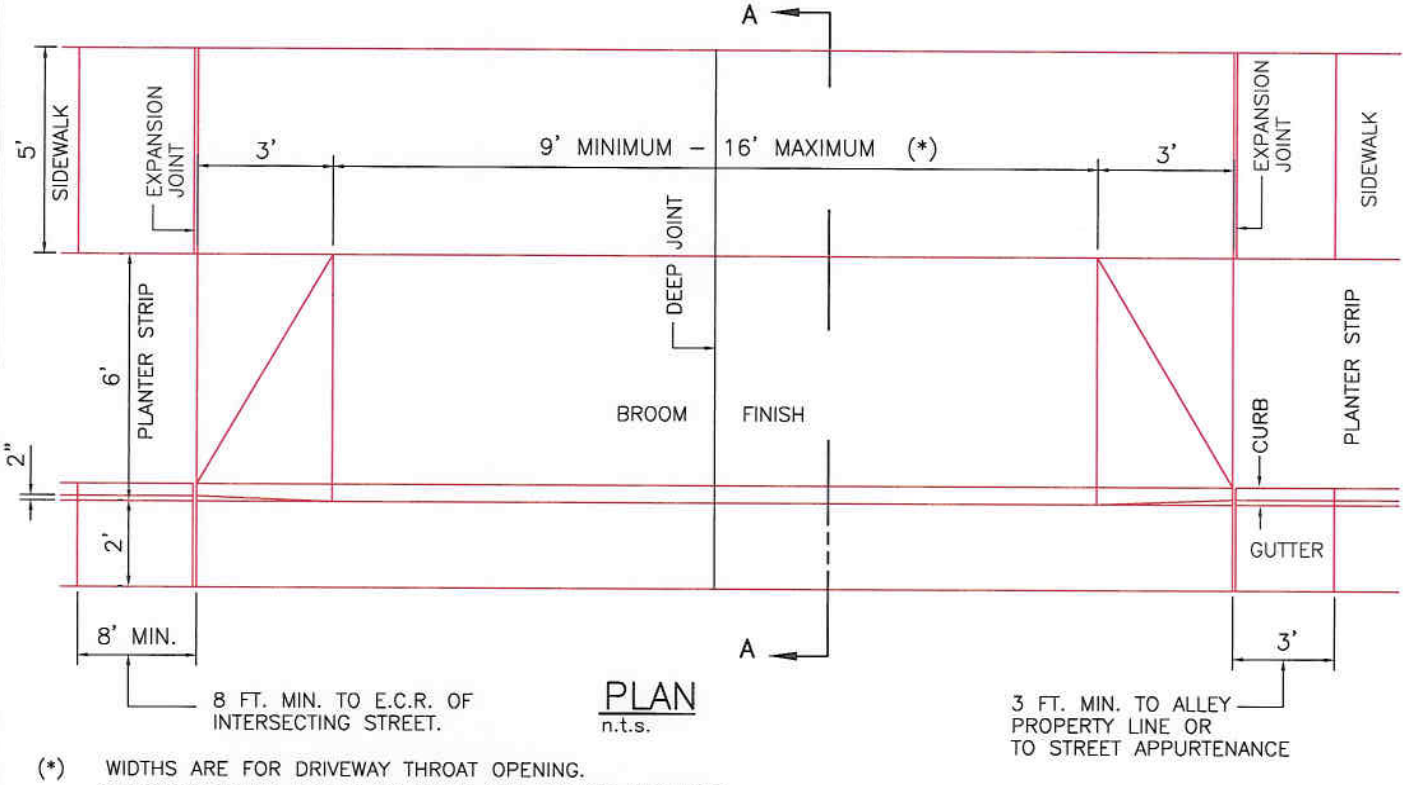

PLAN
n.t.s.

(*) WIDTHS ARE FOR DRIVEWAY THROAT OPENING. THROAT OPENING FOR 3 OR MORE CAR GARAGE REQUIRES APPROVAL FROM CITY ENGINEER.

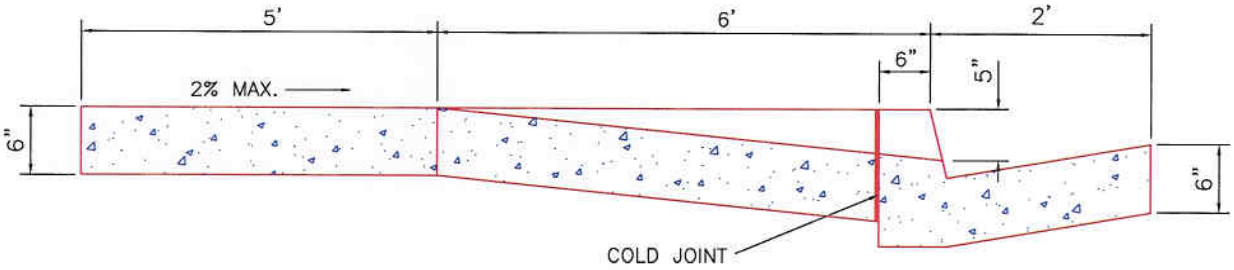

SECTION A–A
n.t.s.

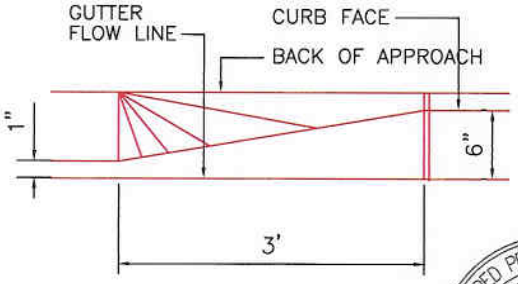

ELEVATION
n.t.s.

GENERAL NOTES:

1. MUST REMOVE ENTIRE CURB AND GUTTER WHEN RECONSTRUCTION IS REQUIRED.
2. NOT MORE THAN 60% OF LOT FRONTAGE MEASURED AT STREET SIDE (TOP OF CURB BETWEEN LOT LINES EXTENDED) MAY BE USED FOR DRIVEWAY OPENING.
3. ALL MULTIPLE RESIDENTIAL PROPERTIES TO HAVE ON–SITE REFUSE PICKUP SHALL INSTALL COMMERCIAL DRIVEWAY APPROACHES PER CITY OF REEDLEY STD. PLAN ST–5B.
4. CONCRETE FOR DRIVEWAY APPROACH SHALL BE CLASS "A" (6 SACK) 6" THICK MIN.
5. DEEP JOINT REQUIRED IN CENTER OF DRIVE APPROACH.
6. APPROACH, CURB AND GUTTER SUBGRADE COMPACTED TO 95% A MINIMUM OF 6".
7. BROOM SWEEP FINISH ON DRIVEWAY APPROACH.
8. E.C.R. = END OF CURB RETURN.
9. MEASUREMENT: DRIVE APPROACH FROM BACK OF CURB TO BACK OF WALK, WING TO WING–SF, CURB & GUTTER–LF.

REGISTERED PROFESSIONAL ENGINEER
BRUCE A. WEBBER
C043156
Exp. 3-31-2008
CIVIL
STATE OF CALIFORNIA

RESIDENTIAL DRIVEWAY APPROACH WITHIN REEDLEY SPECIFIC PLAN AREA	Bruce Webber CITY ENGINEER PUBLIC WORKS DEPARTMENT ENGINEERING DIVISION	12-17-07 PLAN APPROVAL DATE
	REVISIONS: DEC. 2007	CITY OF REEDLEY ST–5A.1

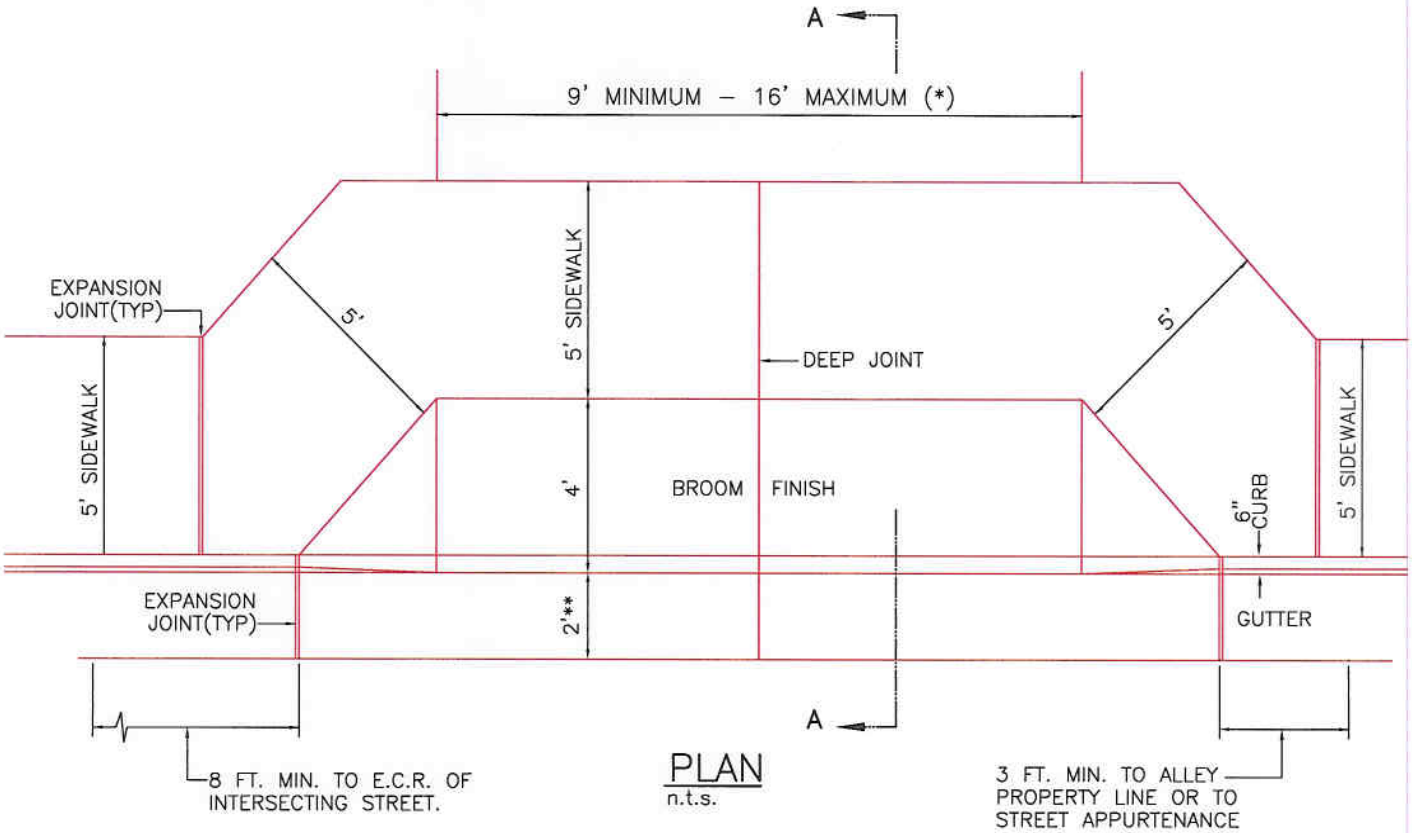

PLAN
n.t.s.

(*) WIDTHS ARE FOR DRIVEWAY THROAT OPENING
THROAT OPENING FOR 3 OR MORE CAR GARAGE REQUIRES APPROVAL FROM CITY ENGINEER

** GUTTER WIDTH PER CONSTRUCTION PLANS OR ON-SITE CONDITIONS IF NOT 2'.

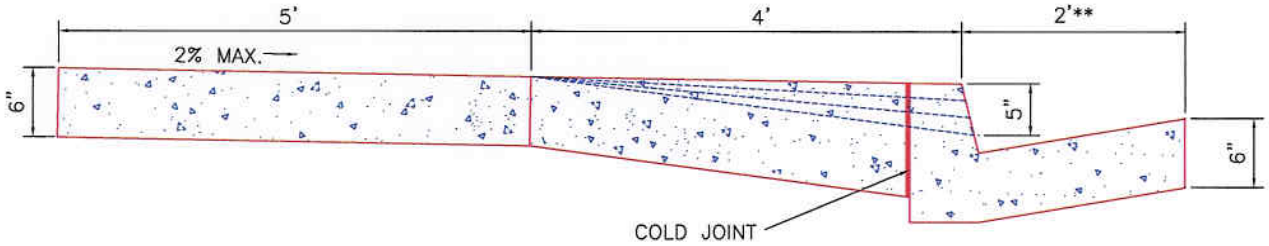

SECTION A–A
n.t.s.

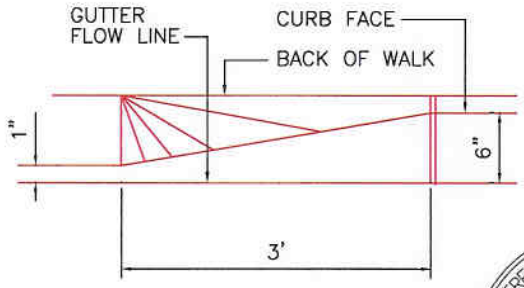

ELEVATION
n.t.s.

GENERAL NOTES:

1. MUST REMOVE ENTIRE CURB AND GUTTER WHEN RECONSTRUCTION IS REQUIRED.
2. NOT MORE THAN 60% OF LOT FRONTAGE MEASURED AT STREET SIDE (TOP OF CURB BETWEEN LOT LINES EXTENDED) MAY BE USED FOR DRIVEWAY OPENING.
3. ALL MULTIPLE RESIDENTIAL PROPERTIES TO HAVE ON-SITE REFUSE PICKUP SHALL INSTALL COMMERCIAL DRIVEWAY APPROACHES PER CITY OF REEDLEY STD. PLAN ST-5B.
4. CONCRETE FOR DRIVEWAY APPROACH SHALL BE CLASS "A" (6 SACK) 6" THICK MIN.
5. DEEP JOINT REQUIRED IN CENTER OF DRIVE APPROACH.
6. APPROACH, CURB AND GUTTER SUBGRADE COMPACTED TO 95% A MINIMUM OF 6".
7. BROOM SWEEP FINISH ON DRIVEWAY APPROACH.
8. E.C.R. = END OF CURB RETURN.
9. MEASUREMENT: DRIVE APPROACH FROM BACK OF CURB TO BACK OF WALK, WING TO WING-SF, CURB & GUTTER-LF.

REGISTERED PROFESSIONAL ENGINEER
BRUCE A. WEBBER
C043156
Exp. 3-31-2008
CIVIL
STATE OF CALIFORNIA

RESIDENTIAL DRIVEWAY APPROACH
HANDICAP ACCESSIBLE
W/MONOLITHIC SIDEWALK

Bruce Webber
CITY ENGINEER
PUBLIC WORKS DEPARTMENT
ENGINEERING DIVISION

12-17-07
PLAN APPROVAL DATE

REVISIONS:

DEC. 2007

CITY OF REEDLEY

ST-5A.2

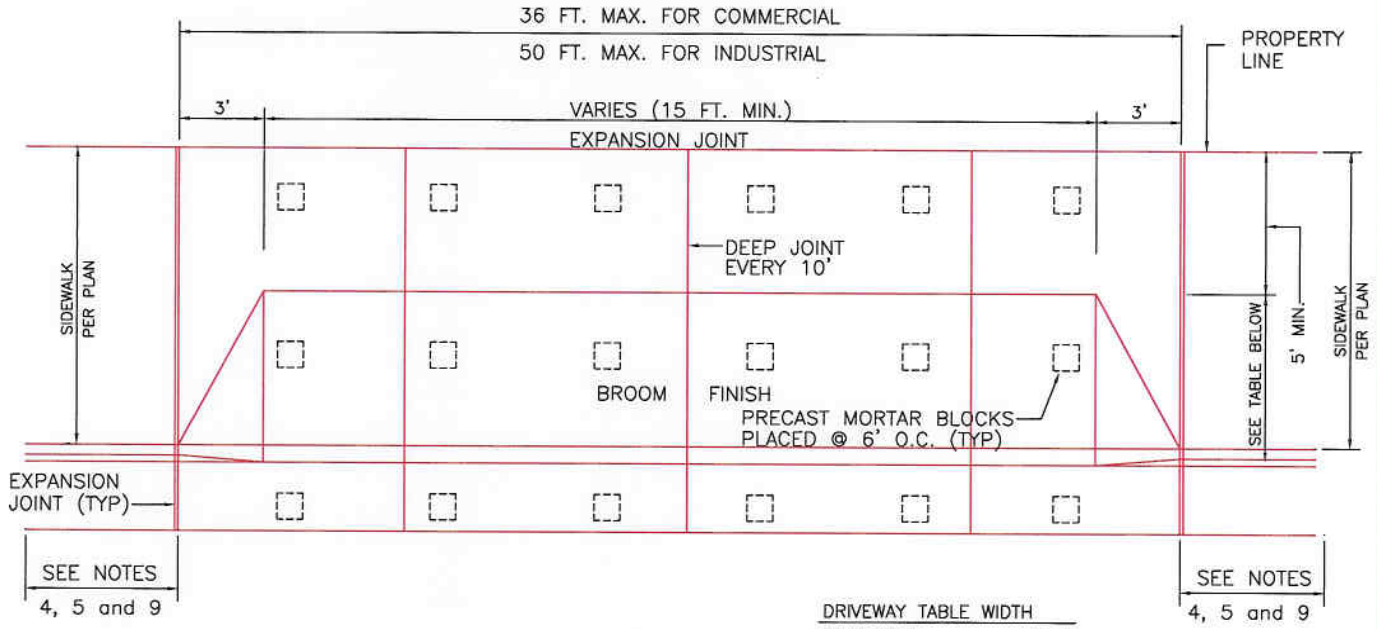

PLAN

DRIVEWAY TABLE WIDTH	
INDUSTRIAL	4'-6"
COMMERCIAL	6'-0"
MULTI. RESIDENTIAL	4'-6"

NOTES:

1. 95% RELATIVE COMPACTION BENEATH DRIVEWAY TO DEPTH OF 6".
2. CONCRETE FOR DRIVEWAY APPROACH SHALL BE CLASS "A" 6 SACK, 5" MAX. SLUMP.
3. NOT OVER 60% OF FRONTAGE MEASURED AT STREET SIDE TOP OF CURB BETWEEN LOT LINES EXTENDED SHALL BE DEVOTED TO DRIVEWAY APPROACHES.
4. MINIMUM DISTANCE TO END OF CURB RETURN SHALL BE 10 FT.
5. MINIMUM DISTANCE TO ALLEY OR NON-STREET PROPERTY SHALL BE 3 FT.
6. STEEL REINFORCEMENT SHALL BE PLACED AS SHOWN BELOW.
7. MAINTAIN 6" CLEARANCE BETWEEN ALL JOINTS AND ENDS OF STEEL REINFORCING.
8. ALL MULTIPLE RESIDENTIAL PROPERTIES TO HAVE ON-SITE REFUSE PICKUP SHALL INSTALL COMMERCIAL DRIVEWAY APPROACHES PER THIS CITY OF REEDLEY STD. PLAN.
9. MINIMUM DISTANCE BETWEEN DRIVEWAYS EQUALS WIDTH OF LARGEST DRIVEWAY.

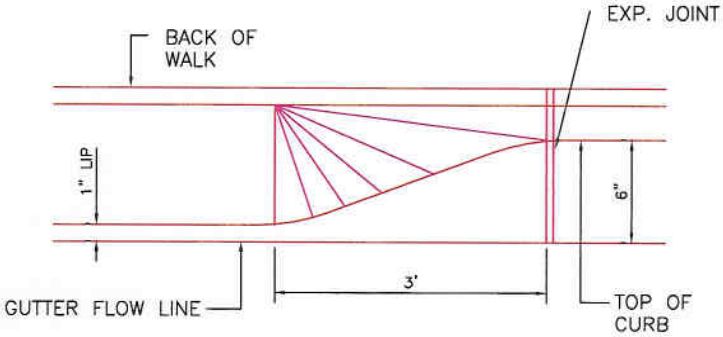

ELEVATION DETAIL

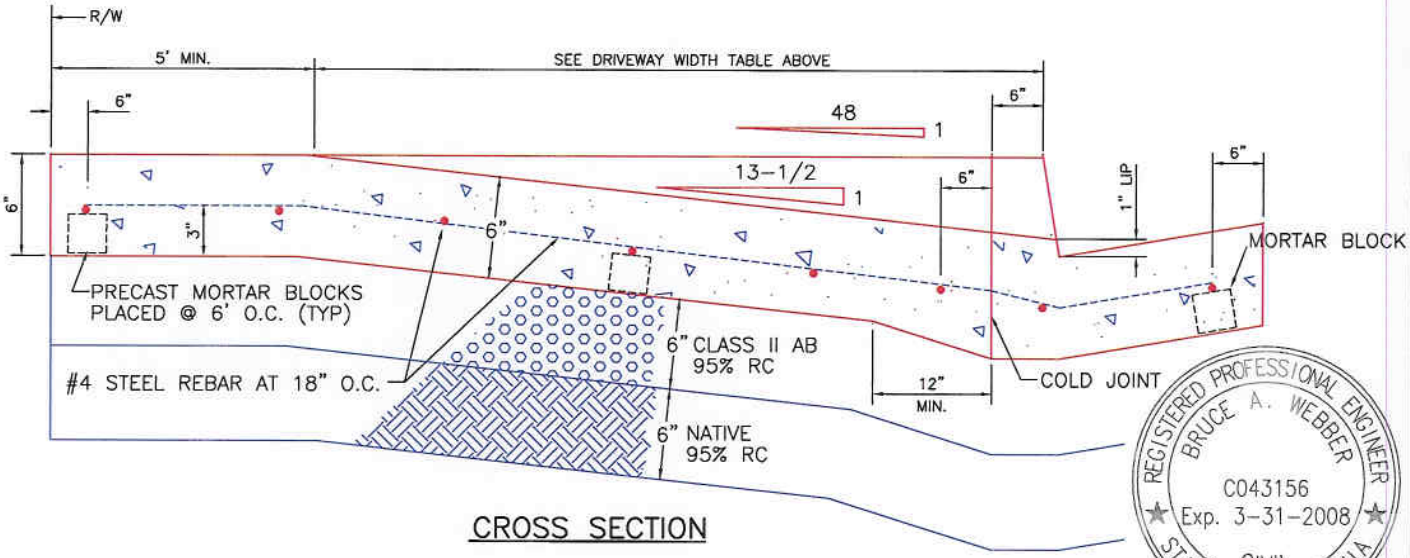

CROSS SECTION

NOT TO SCALE

REGISTERED PROFESSIONAL ENGINEER
BRUCE A. WEBBER
C043156
Exp. 3-31-2008
CIVIL
STATE OF CALIFORNIA

COMMERCIAL / INDUSTRIAL DRIVEWAY APPROACH	Bruce Webber CITY ENGINEER PUBLIC WORKS DEPARTMENT ENGINEERING DIVISION	12-17-07 PLAN APPROVAL DATE
	REVISIONS: DEC. 2007	CITY OF REEDLEY ST-5B

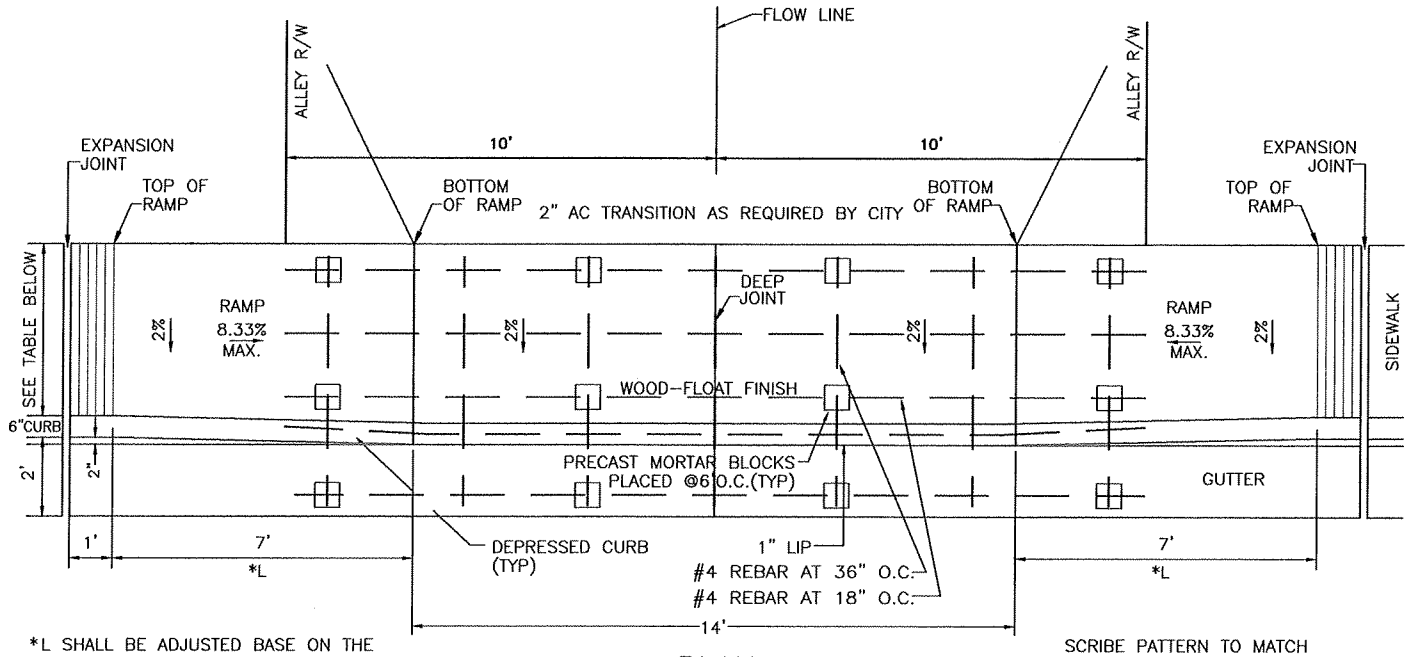

*L SHALL BE ADJUSTED BASE ON THE HEIGHT OF THE MATCHING CURB FACE. RAMP NOT TO EXCEED 8.33% SLOPE (1 TO 12).

SCRIBE PATTERN TO MATCH SIDEWALK PATTERN.

PLAN

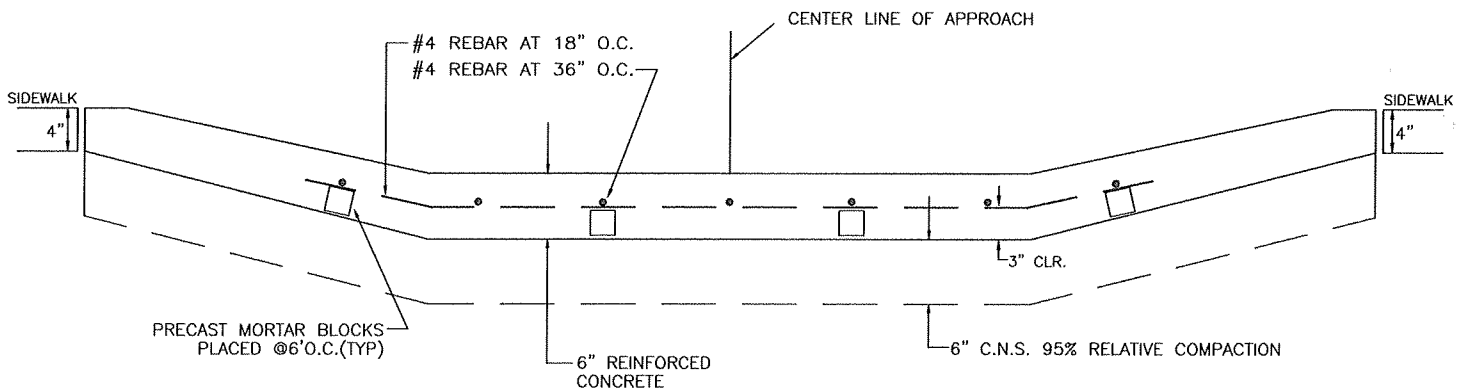

SECTION AT BACK OF APPROACH

SIDEWALK WIDTH TABLE:

RESIDENTIAL	4'-0"
INDUSTRIAL	4'-0"
COMMERCIAL	9'-6"

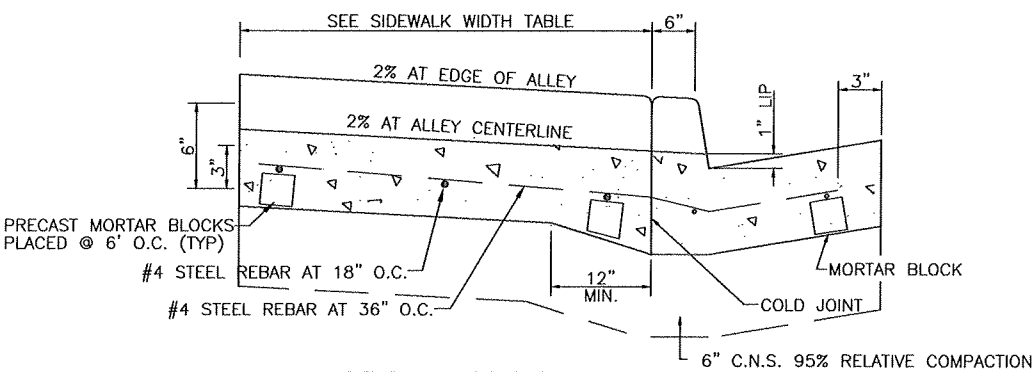

CROSS SECTION

NOT TO SCALE

REGISTERED PROFESSIONAL ENGINEER
BRUCE A. WEBBER
C043156
Exp. 3-31-2006
CIVIL
STATE OF CALIFORNIA

Bruce Webber
CITY ENGINEER
PUBLIC WORKS DEPARTMENT
ENGINEERING DIVISION

12-5-05
PLAN APPROVAL DATE

ADA COMPLIANT ALLEY APPROACH

REVISIONS:
NOV. 2005

CITY OF REEDLEY

ST-5C

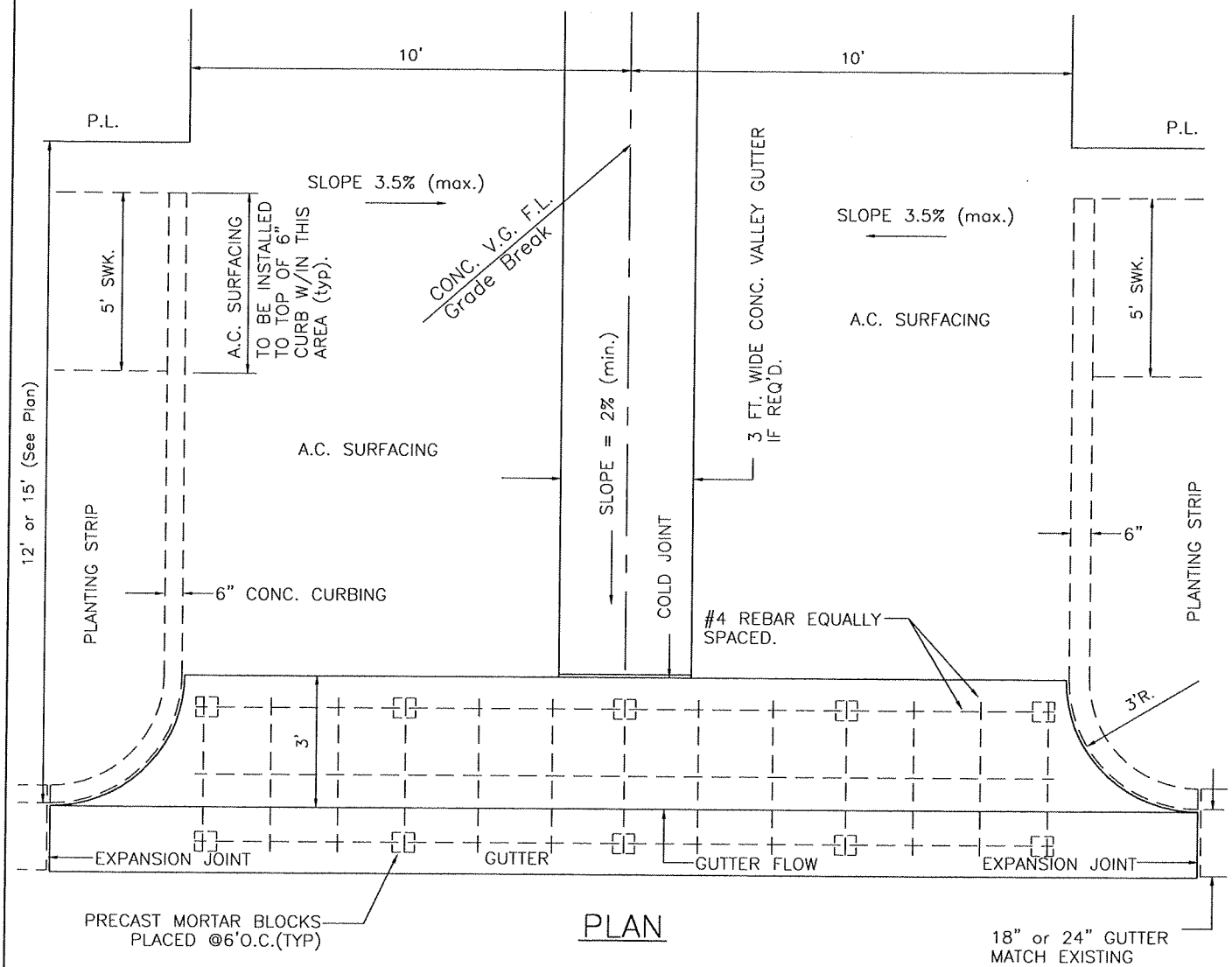

PLAN

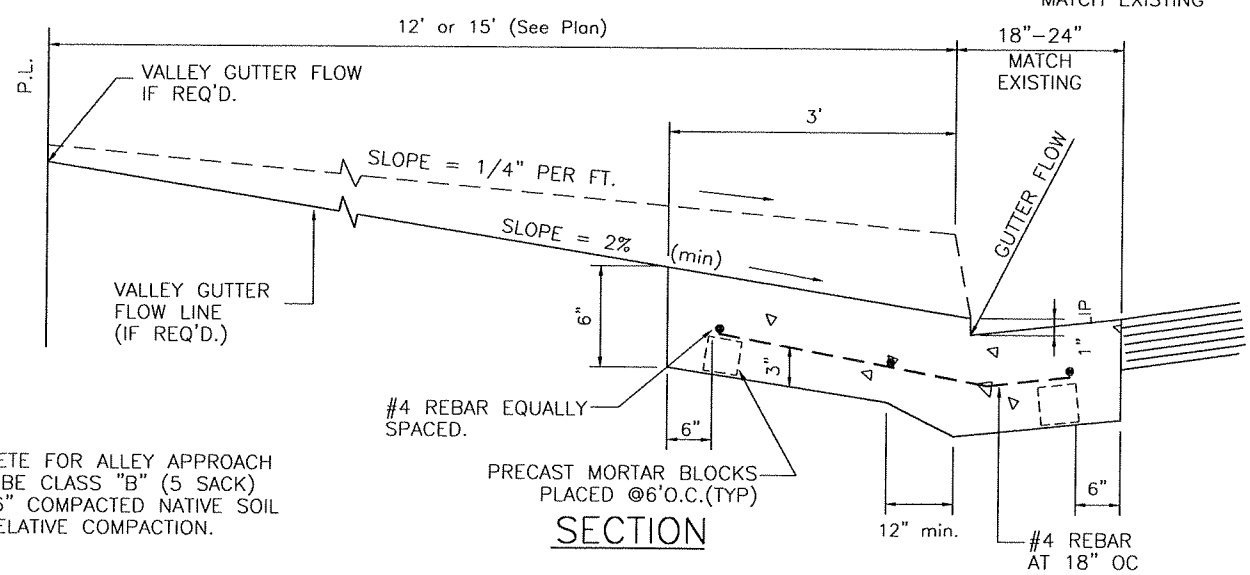

SECTION

NOTE:
CONCRETE FOR ALLEY APPROACH SHALL BE CLASS "B" (5 SACK) OVER 6" COMPACTED NATIVE SOIL 95% RELATIVE COMPACTION.

NOT TO SCALE

ALLEY APPROACH AREAS WITH PLANTING STRIPS	Andrew J. Benelli CITY ENGINEER PUBLIC WORKS DEPARTMENT ENGINEERING DIVISION	02-24-04 PLAN APPROVAL DATE
	REVISIONS: JAN 2004	CITY OF REEDLEY ST–5D

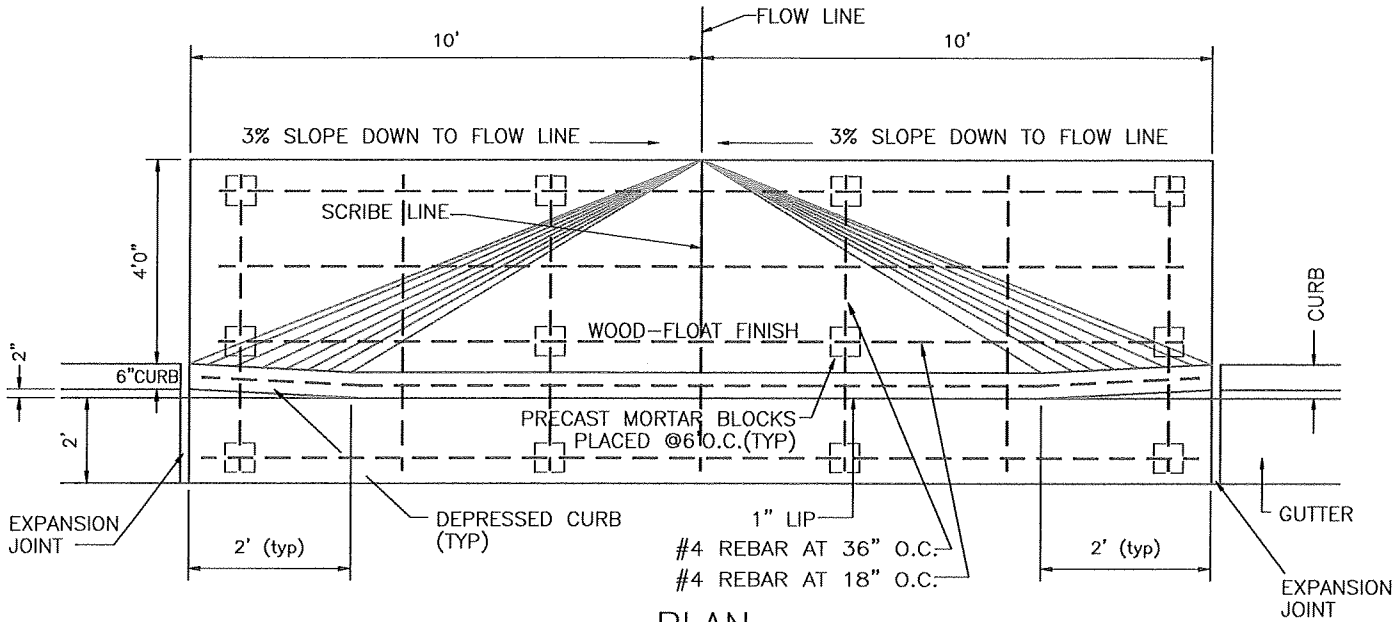

PLAN

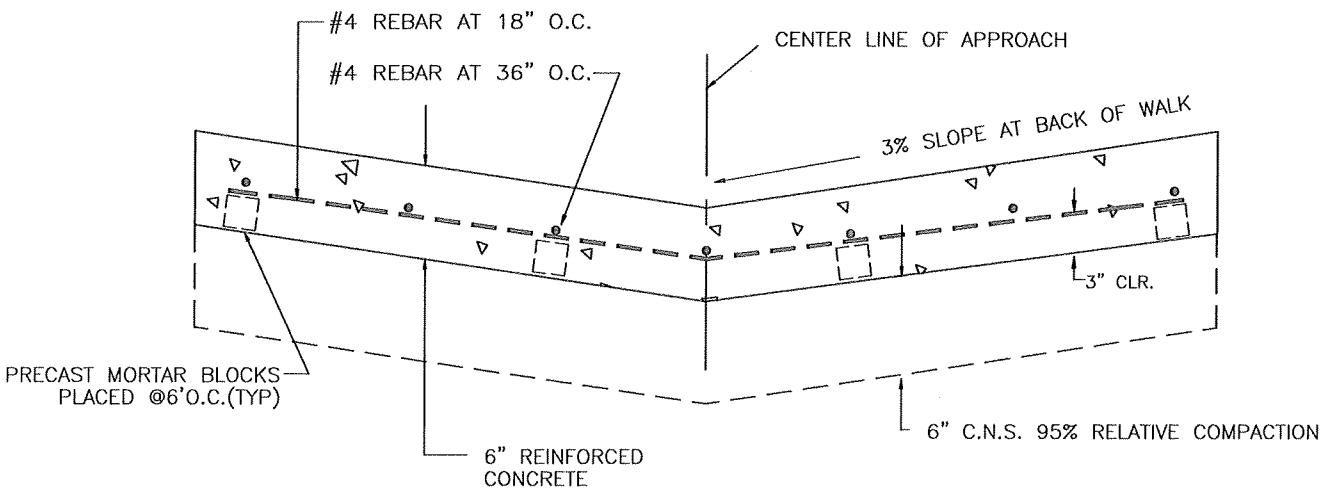

SECTION AT BACK OF APPROACH

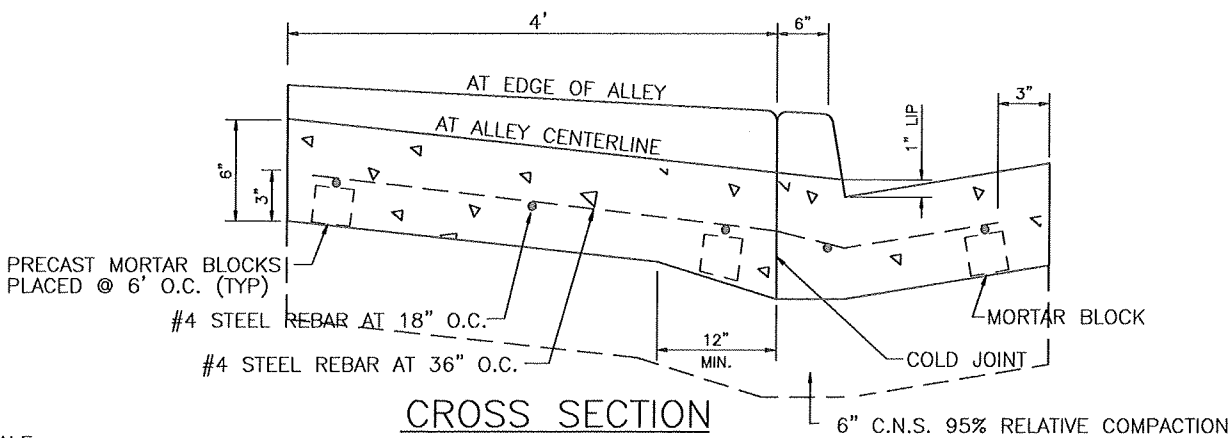

CROSS SECTION

NOT TO SCALE

ALLEY APPROACH WHERE NO SIDEWALK EXISTS	Andrew J Benelli CITY ENGINEER PUBLIC WORKS DEPARTMENT ENGINEERING DIVISION	Aug 30, 04 PLAN APPROVAL DATE
	REVISIONS: AUG 2004	CITY OF REEDLEY ST-5E

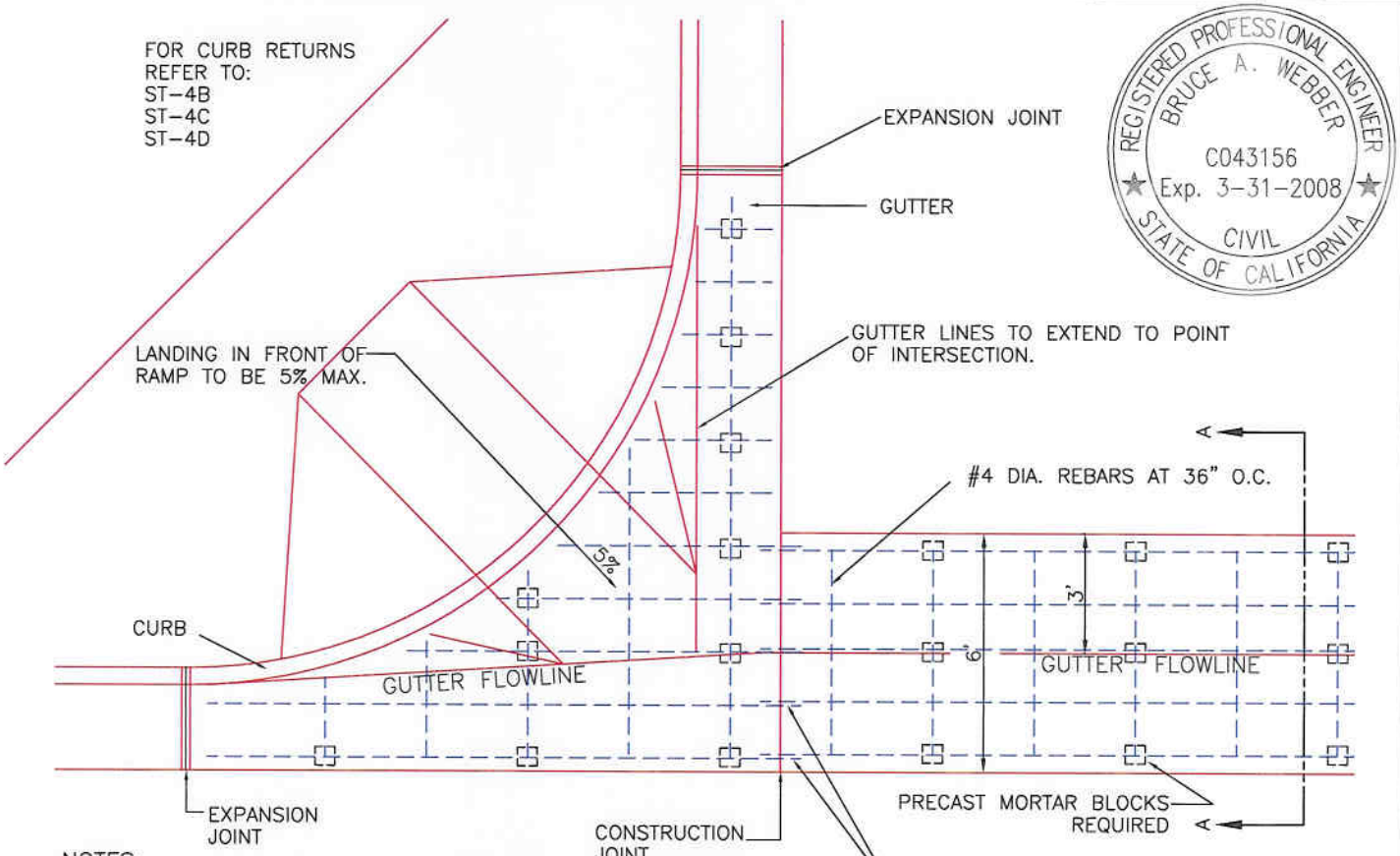

REGISTERED PROFESSIONAL ENGINEER
BRUCE A. WEBBER
C043156
Exp. 3-31-2008
CIVIL
STATE OF CALIFORNIA

NOTES:

1. MUST REPLACE EX. CURB & GUTTER WHEN RECONSTRUCTION IS REQUIRED.
2. CONCRETE SHALL BE CLASS 'A' 6 SACK, MAX. 5" SLUMP.
3. STEEL REINFORCEMENT TO BE FREE OF RUST & PLACED AS SHOWN.
4. AB & NATIVE SUBGRADE TO BE COMPACTED TO A MIN. OF 95%. COMPACTION TESTS REQUIRED.
5. BROOM FINISH.

PLAN

NOTE:
EXTENSION TO BE WRAPPED WITH A KRAFT TYPE PAPER TO ALLOW FOR MOVEMENT.

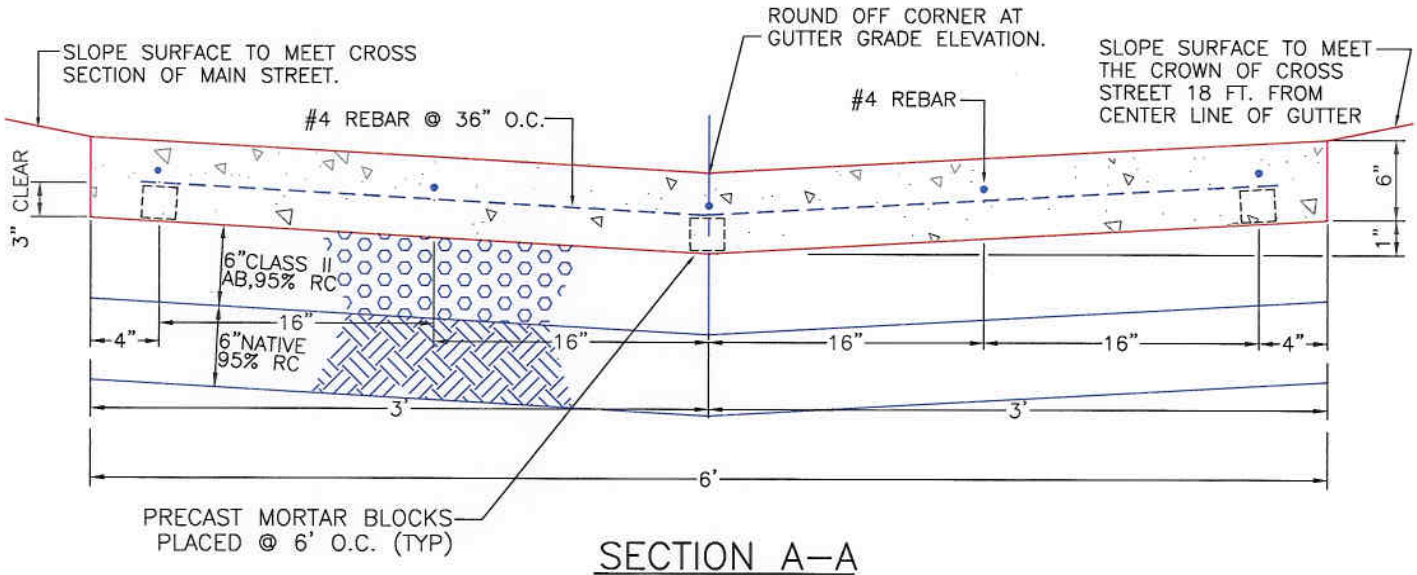

SECTION A–A

NO SCALE

CONCRETE VALLEY GUTTER	Bruce A Webber CITY ENGINEER PUBLIC WORKS DEPARTMENT ENGINEERING DIVISION	12-17-07 PLAN APPROVAL DATE
	REVISIONS: DEC 2007	CITY OF REEDLEY ST–6

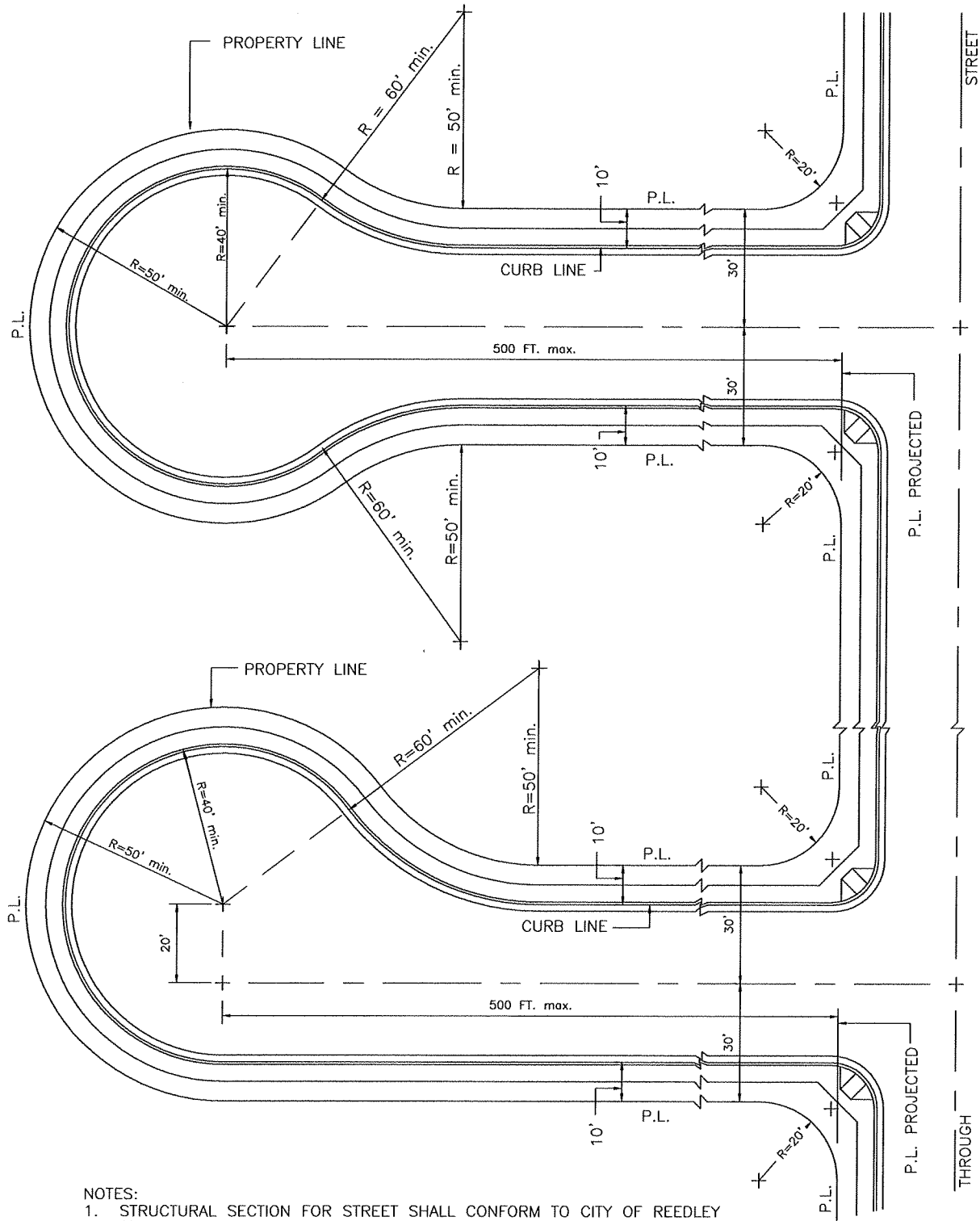

NOTES:
1. STRUCTURAL SECTION FOR STREET SHALL CONFORM TO CITY OF REEDLEY STD. PLAN ST-1A AND ST-11.
2. MAXIMUM RADIUS OF CURVATURE OF CENTERLINE SHALL BE 175 FEET.
3. MINIMUM STREET WIDTH (CURB-FACE TO CURB-FACE) SHALL BE 40 FEET.

REGISTERED PROFESSIONAL ENGINEER
BRUCE A. WEBBER
C043156
Exp. 3-31-2006
CIVIL
STATE OF CALIFORNIA

SCALE: 1" = 40'

STANDARD CUL-DE-SAC	CITY ENGINEER PUBLIC WORKS DEPARTMENT ENGINEERING DIVISION	12-5-05 PLAN APPROVAL DATE
	REVISIONS: NOV. 2005	CITY OF REEDLEY ST-7A

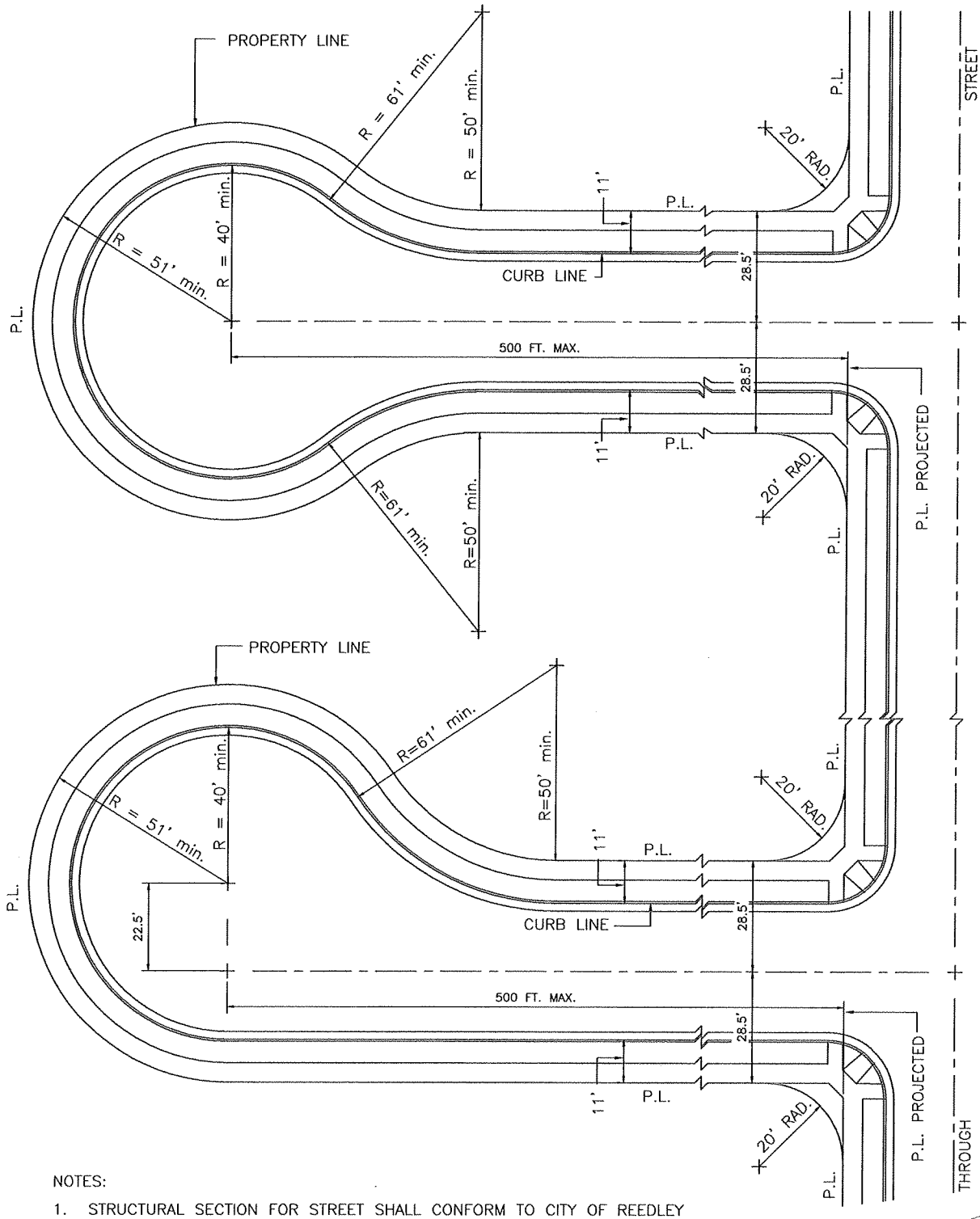

NOTES:

1. STRUCTURAL SECTION FOR STREET SHALL CONFORM TO CITY OF REEDLEY STD. PLAN ST-1A AND ST-11
2. MAXIMUM RADIUS OF CURVATURE OF CENTERLINE SHALL BE 175 FEET.
3. MINIMUM STREET WIDTH (CURB-FACE TO CURB-FACE) SHALL BE 35 FEET.
4. THE ISLAND SHALL BE LANDSCAPED WITH GROUNDCOVER AND AT LEAST ONE SHADE TREE.

REGISTERED PROFESSIONAL ENGINEER
BRUCE A. WEBBER
C043156
Exp. 3-31-2006
CIVIL
STATE OF CALIFORNIA

SCALE: 1" = 40'

STANDARD CUL-DE-SAC WITHIN REEDLEY SPECIFIC PLAN AREA	CITY ENGINEER PUBLIC WORKS DEPARTMENT ENGINEERING DIVISION	12-5-05 PLAN APPROVAL DATE
	REVISIONS: NOV. 2005	CITY OF REEDLEY ST-7A.1

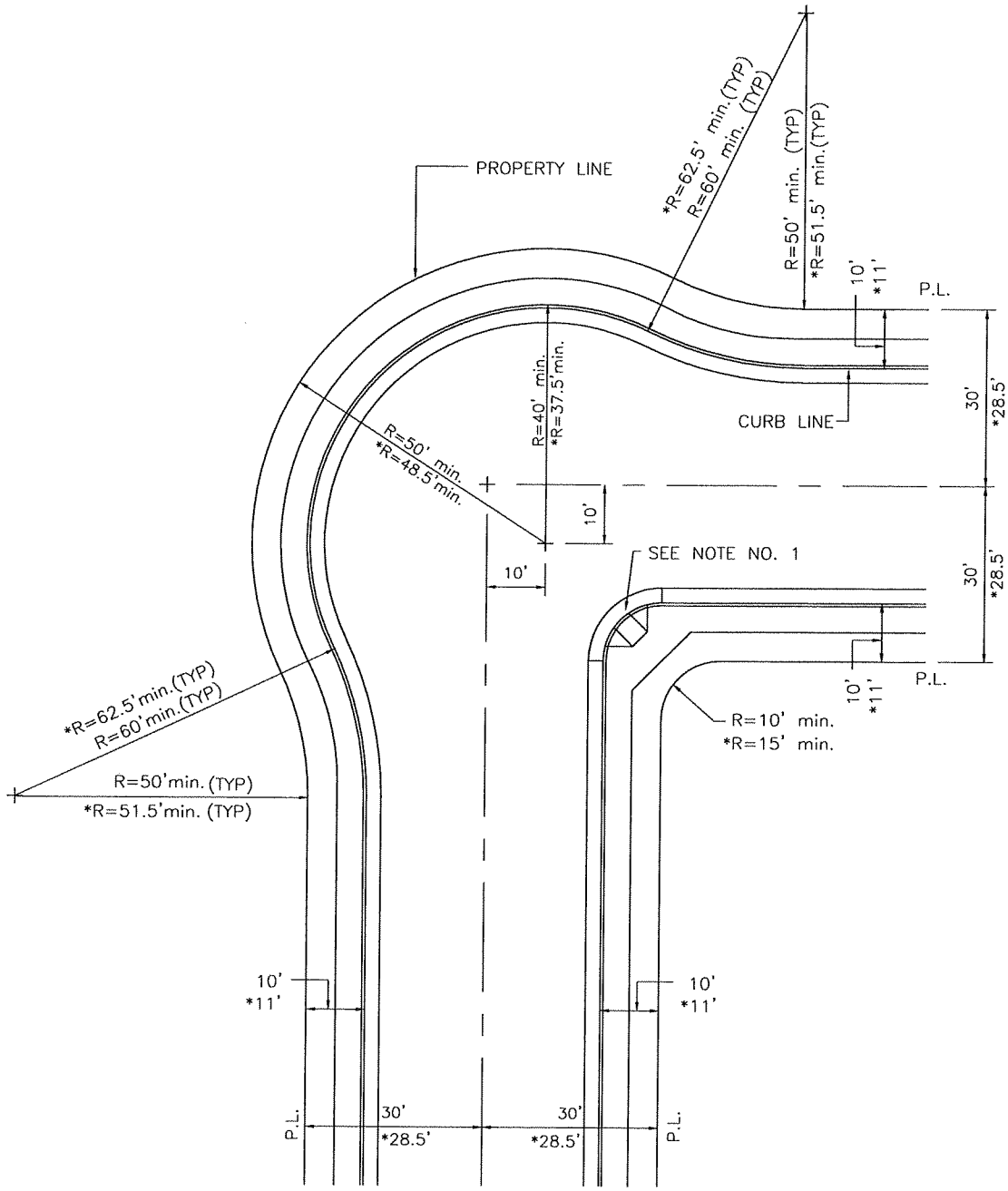

* DIMENSION TO BE USED WITHIN THE REEDLEY SPECIFIC PLAN AREAS

NOTES:

1. REFER TO CITY OF REEDLEY STD. PLAN ST-4B OR ST-4B.1 IF WITHIN THE REEDLEY SPECIFIC PLAN AREA.
2. STRUCTURAL SECTION FOR STREET SHALL CONFORM TO CITY OF REEDLEY STD. PLANS ST-1A OR ST-11.
3. MINIMUM STREET WIDTH (CURB-FACE TO CURB-FACE) SHALL BE 40 FT.
4. MINIMUM STREET WIDTH (CURB-FACE TO CURB-FACE) SHALL BE 35 FT. WITHIN THE REEDLEY SPECIFIC PLAN AREAS.

SCALE: 1" = 30'

KNUCKLE CURVE	Andrew J. Borelli CITY ENGINEER PUBLIC WORKS DEPARTMENT ENGINEERING DIVISION	02-24-04 PLAN APPROVAL DATE
	REVISIONS: JAN 2004	CITY OF REEDLEY ST-7B

TEMPORARY TIMBER BARRICADE

NOT TO SCALE

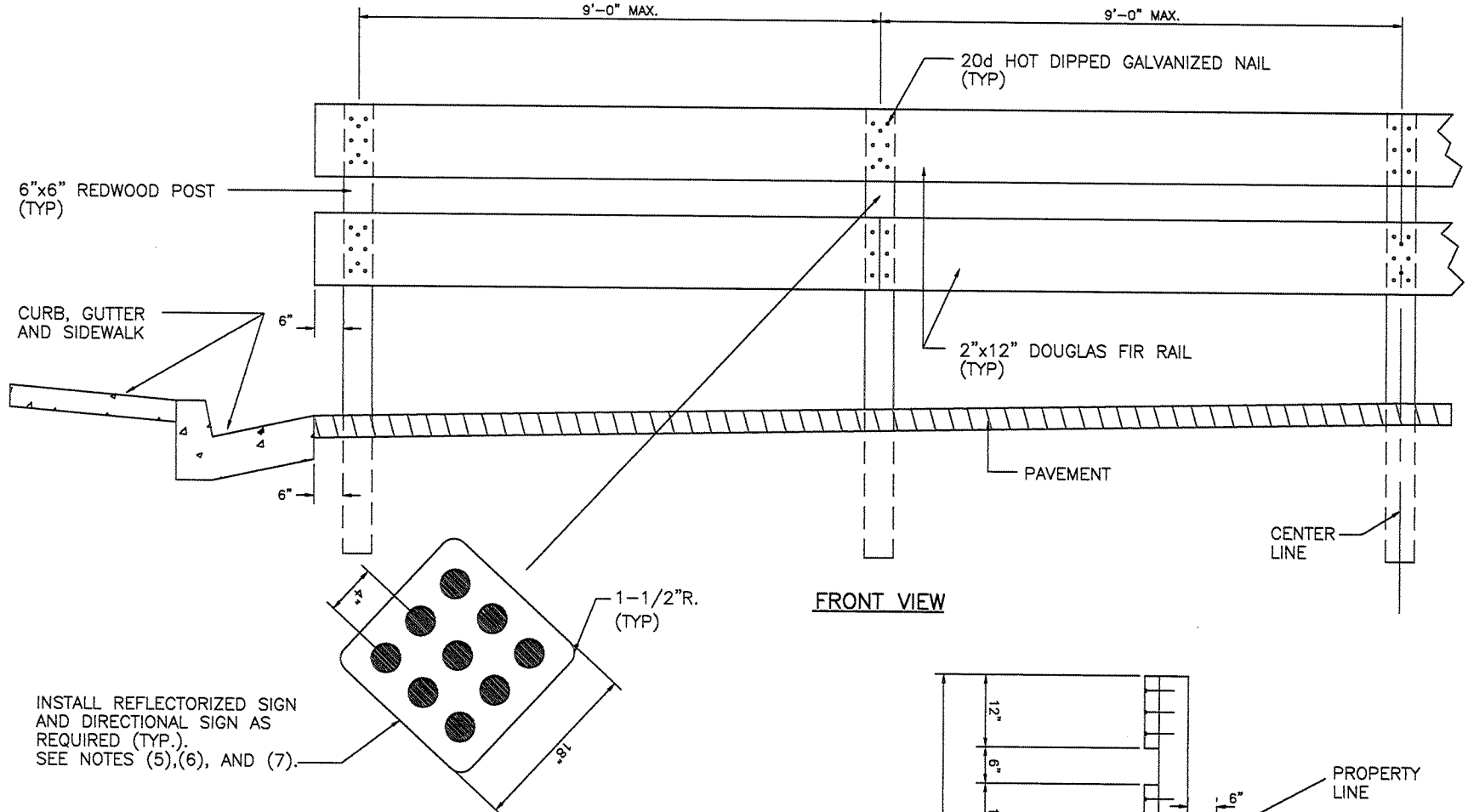

FRONT VIEW

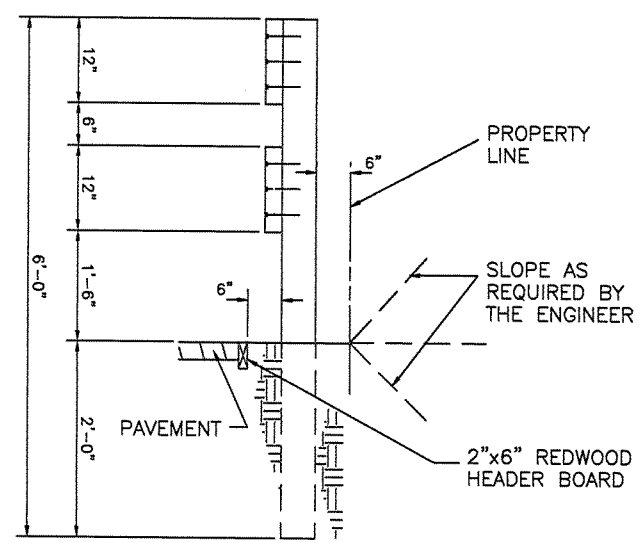

SIDE VIEW

NOTES:

1. ALL WOOD SURFACES SHALL BE PAINTED WITH TWO (2) COATS OF WHITE PAINT CONFORMING TO STATE OF CA STANDARD SPECIFICATION 91-3.02.
2. ALL TIMBER SHALL BE "SURFACED FOUR SIDES".
3. BARRICADE SHALL EXTEND ACROSS THE FULL WIDTH OF THE TRAVEL WAY.
4. PERMISSION TO PERFORM REQUIRED SLOPING SHALL BE ACQUIRED FROM THE AFFECTED PROPERTY OWNER IN WRITING PRIOR TO DOING THE WORK.
5. STATE OF CALIFORNIA TYPE N-5, RED REFLECTORIZED SIGN WITH 9 RED REFLECTORS AT DEAD END STREETS.
6. STATE OF CALIFORNIA TYPE N-4, YELLOW REFLECTORIZED SIGN WITH 9 YELLOW REFLECTORS AND STATE OF CALIFORNIA W56 OR W57 AT "T" OR "L" INTERSECTIONS.
7. REFLECTORIZED SIGNS ARE TO BE INSTALLED AT A HEIGHT AND POSITION SUCH THAT VEHICLE HEADLIGHTS WILL PROPERLY STRIKE THE SIGNS WHEN THE VEHICLE FOLLOWS A NORMAL APPROACH PATH TO THE BARRICADE.

REGISTERED PROFESSIONAL ENGINEER BRUCE A. WEBBER C043156 Exp. 3-31-2006 CIVIL STATE OF CALIFORNIA

CITY ENGINEER
PUBLIC WORKS DEPARTMENT
ENGINEERING DIVISION

12-18-05
PLAN APPROVAL DATE

REVISIONS:
NOV. 2005

CITY OF REEDLEY

ST-8A

REMOVABLE CHAIN BARRICADE

NOT TO SCALE

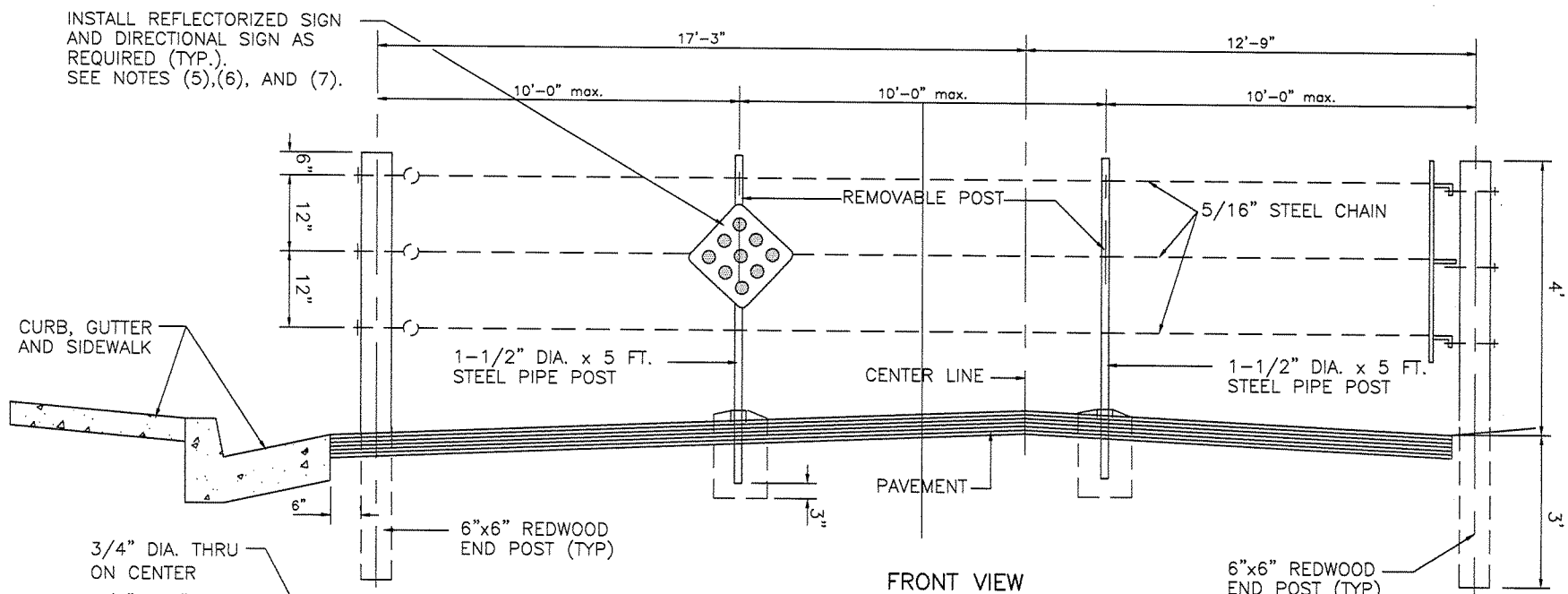

FRONT VIEW

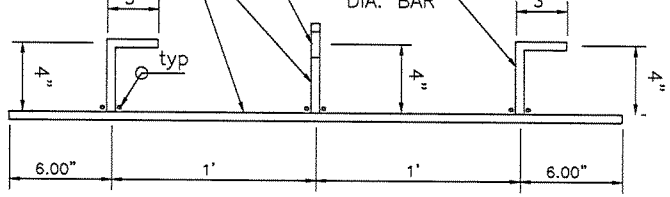

DETAIL-A

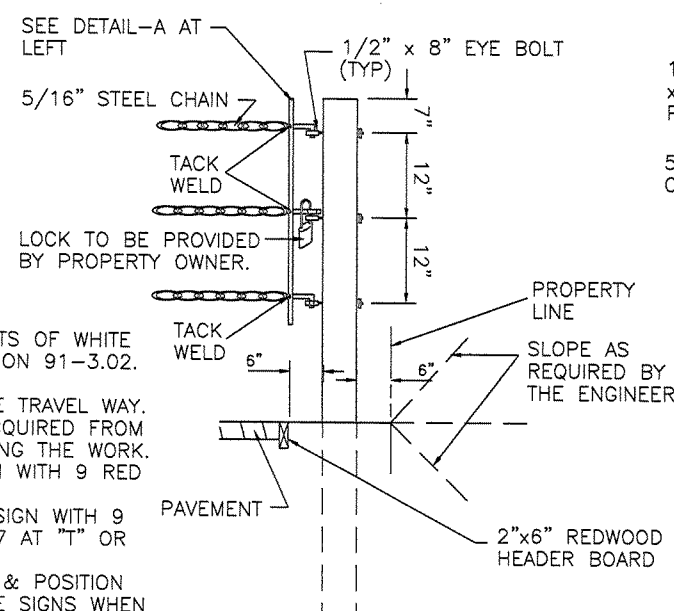

END POST DETAIL

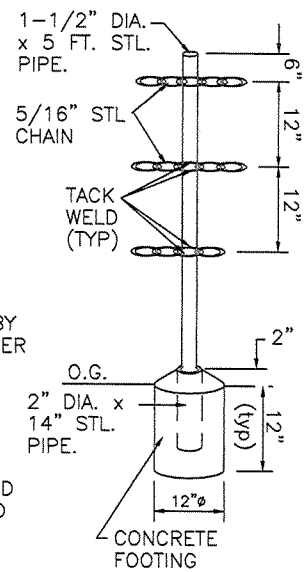

REMOVABLE 1-1/2" STEEL PIPE POST

NOTES:

1. ALL WOOD SURFACES SHALL BE PAINTED W/ TWO (2) COATS OF WHITE PAINT CONFORMING TO STATE OF CA STANDARD SPECIFICATION 91-3.02.
2. ALL TIMBER SHALL BE "SURFACED FOUR SIDES".
3. BARRICADE SHALL EXTEND ACROSS THE FULL WIDTH OF THE TRAVEL WAY.
4. PERMISSION TO PERFORM REQUIRED SLOPING SHALL BE ACQUIRED FROM THE AFFECTED PROPERTY OWNER IN WRITING PRIOR TO DOING THE WORK.
5. STATE OF CALIFORNIA TYPE N-5, RED REFLECTORIZED SIGN WITH 9 RED REFLECTORS AT DEAD END STREETS.
6. STATE OF CALIFORNIA TYPE N-4, YELLOW REFLECTORIZED SIGN WITH 9 YELLOW REFLECTORS & STATE OF CALIFORNIA W56 OR W57 AT "T" OR "L" INTERSECTIONS.
7. REFLECTORIZED SIGNS ARE TO BE INSTALLED AT A HEIGHT & POSITION SUCH THAT VEHICLE HEADLIGHTS WILL PROPERLY STRIKE THE SIGNS WHEN THE VECHICLE FOLLOWS A NORMAL APPROACH PATH TO THE BARRICADE.

REGISTERED PROFESSIONAL ENGINEER BRUCE A. MEGREE 0043156 CIVIL Exp. 3-31-2006 STATE OF CALIFORNIA

CITY ENGINEER
PUBLIC WORKS DEPARTMENT
ENGINEERING DIVISION

12-8-05
PLAN APPROVAL DATE

REVISIONS:
DEC. 2005

CITY OF REEDLEY

ST-8B

N:\AutoCad Drawing Files\Standard Plans\St-9.dwg

SURVEY MONUMENT DETAILS

NOT TO SCALE

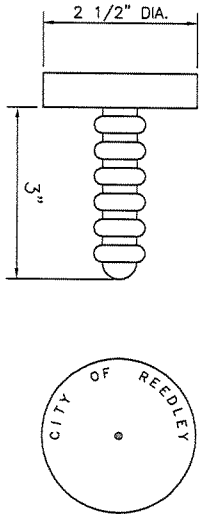

DETAIL

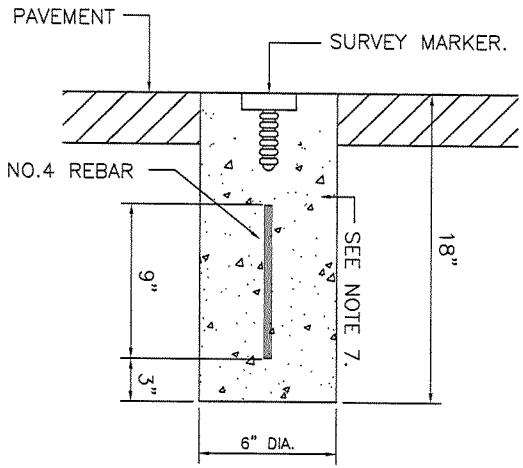

SERVCO NO. 2136 BRONZE SURVEY MARKER.

CENTERLINE MONUMENT

NOTES:

1. IN CONFORMANCE WITH SECTION 8772 OF THE "LAND SURVEYORS ACT", ALL CORNERS SHALL BE TAGGED WITH THE SURVEYOR'S NUMBER.
2. ALL SUBDIVISION BOUNDARY CORNERS, ANGLE POINTS, AND CURVE POINTS SHALL BE MONUMENTED WITH THE SUBDIVISION CORNER MONUMENT.
3. ALL BLOCK CORNERS, ANGLE POINTS AND CURVE POINTS INTERIOR TO THE TRACT SHALL BE MONUMENTED WITH THE BLOCK CORNER MONUMENT.
4. ALL LOT CORNERS NOT MARKED BY SUBDIVISION OR BLOCK CORNER MONUMENTS SHALL BE MONUMENTED WITH THE LOT CORNER MONUMENT.
5. ALL INTERSECTIONS OF INTERIOR STREET CENTERLINES W/ EXTERIOR OR BOUNDARY STREET CENTERLINES SHALL BE MONUMENTED WITH CENTERLINE MONUMENTS SET ON THE INTERIOR STREET CENTERLINE 10 FT. OFF THE EXTERIOR STREET CENTERLINE.
6. WITH PERMISSION OF THE CITY ENGINEER, PIPE FOR LOT CORNER MONUMENTS MAY BE SHORTENED TO 15" IN LENGTH IN AREAS WITH HARDPAN.
7. CONCRETE FOR MONUMENTS SHALL BE CLASS 'C' (4 SACK) CONCRETE.

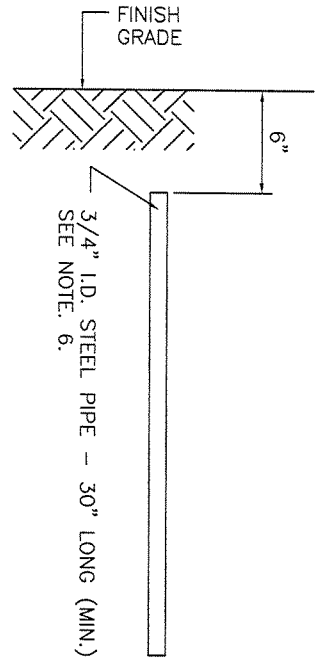

LOT CORNER

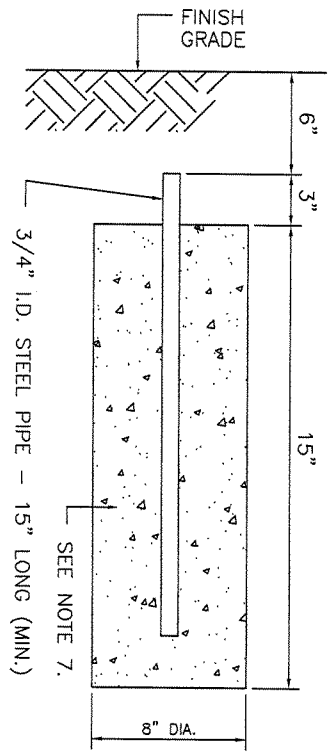

SUBDIVISION AND BLOCK CORNER

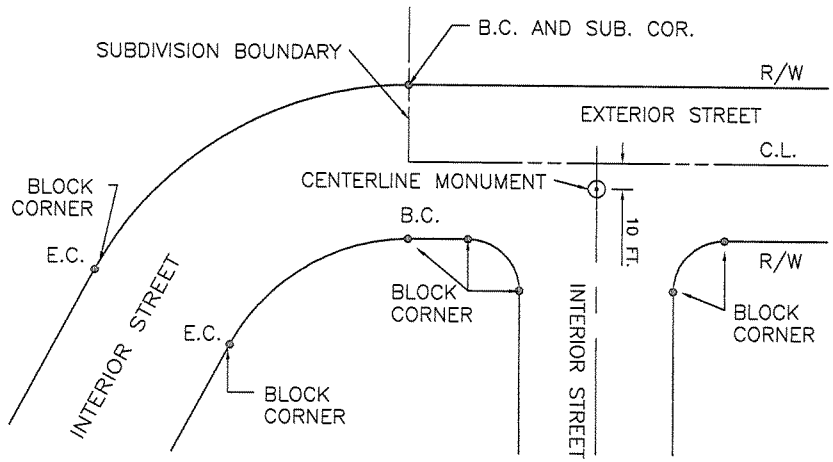

TYPICAL LOCATIONS FOR CORNERS AND MONUMENTS

REGISTERED PROFESSIONAL ENGINEER BRUCE A. WEBBER C043156 Exp. 3-31-2008 CIVIL STATE OF CALIFORNIA

CITY ENGINEER
PUBLIC WORKS DEPARTMENT
ENGINEERING DIVISION

6-25-07
PLAN APPROVAL DATE

REVISIONS:
JAN. 2007

CITY OF REEDLEY

ST-9

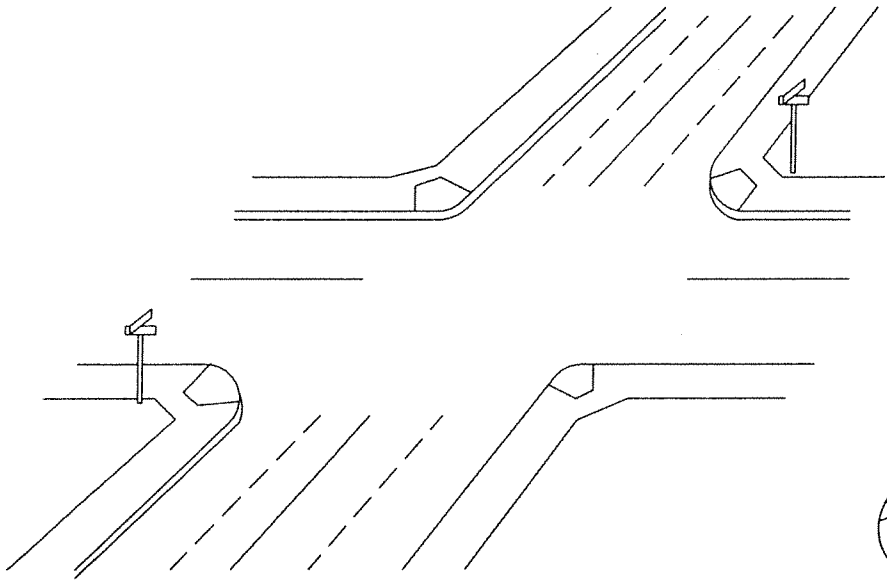

LOCATION AT INTERSECTION

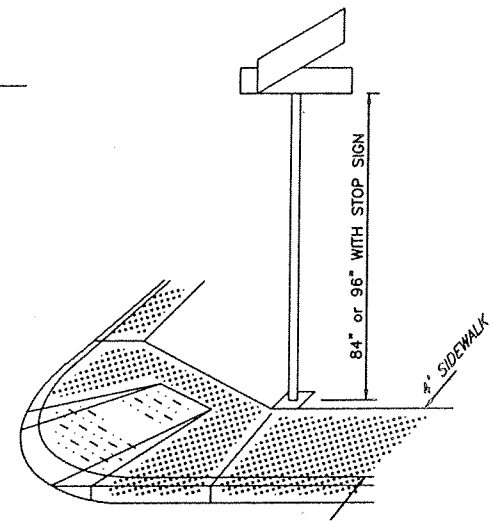

LOCATION IN 4 FT. MONOLITHIC SIDEWALK

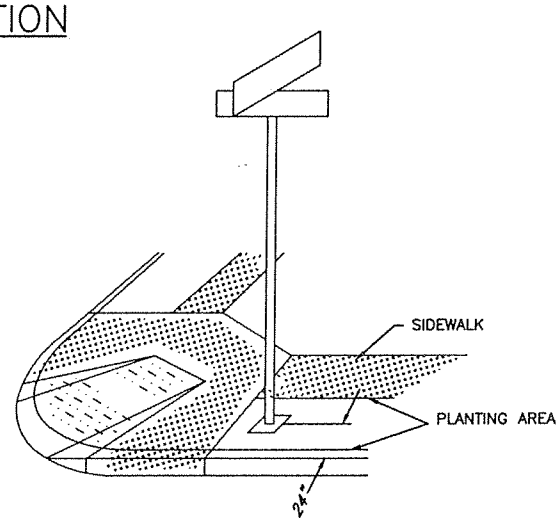

LOCATION IN PLANTING STRIP

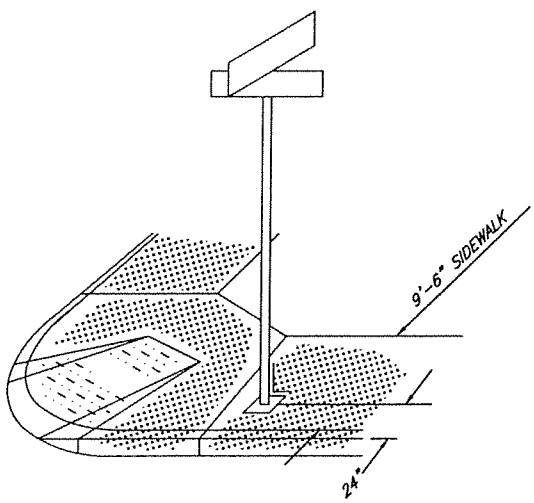

LOCATION IN FULL WIDTH SIDEWALK

NOTES:

1. CORNER FOR INSTALLATION SHALL BE AS DESIGNATED BY THE CITY ENGINEER.
2. SAWCUT REQUIRED IF SIGN INSTALLED AFTER SIDEWALK IS POURED.
3. WHEN INSTALLED IN SIDEWALK, POLES WILL BE SET PRIOR TO SIDEWALK POUR.
4. SAME PIPE FOR STOP SIGN AND STREET NAME SIGN MAY BE UTILIZED WHERE APPROVED.

NOT TO SCALE

SEE STD. DWG. ST-10C
ST-10B

STREET SIGN LOCATION	Andrew J. Benetti CITY ENGINEER PUBLIC WORKS DEPARTMENT ENGINEERING DIVISION	May 13, 2003 PLAN APPROVAL DATE
	REVISIONS: AUG. 1995	CITY OF REEDLEY ST-10A

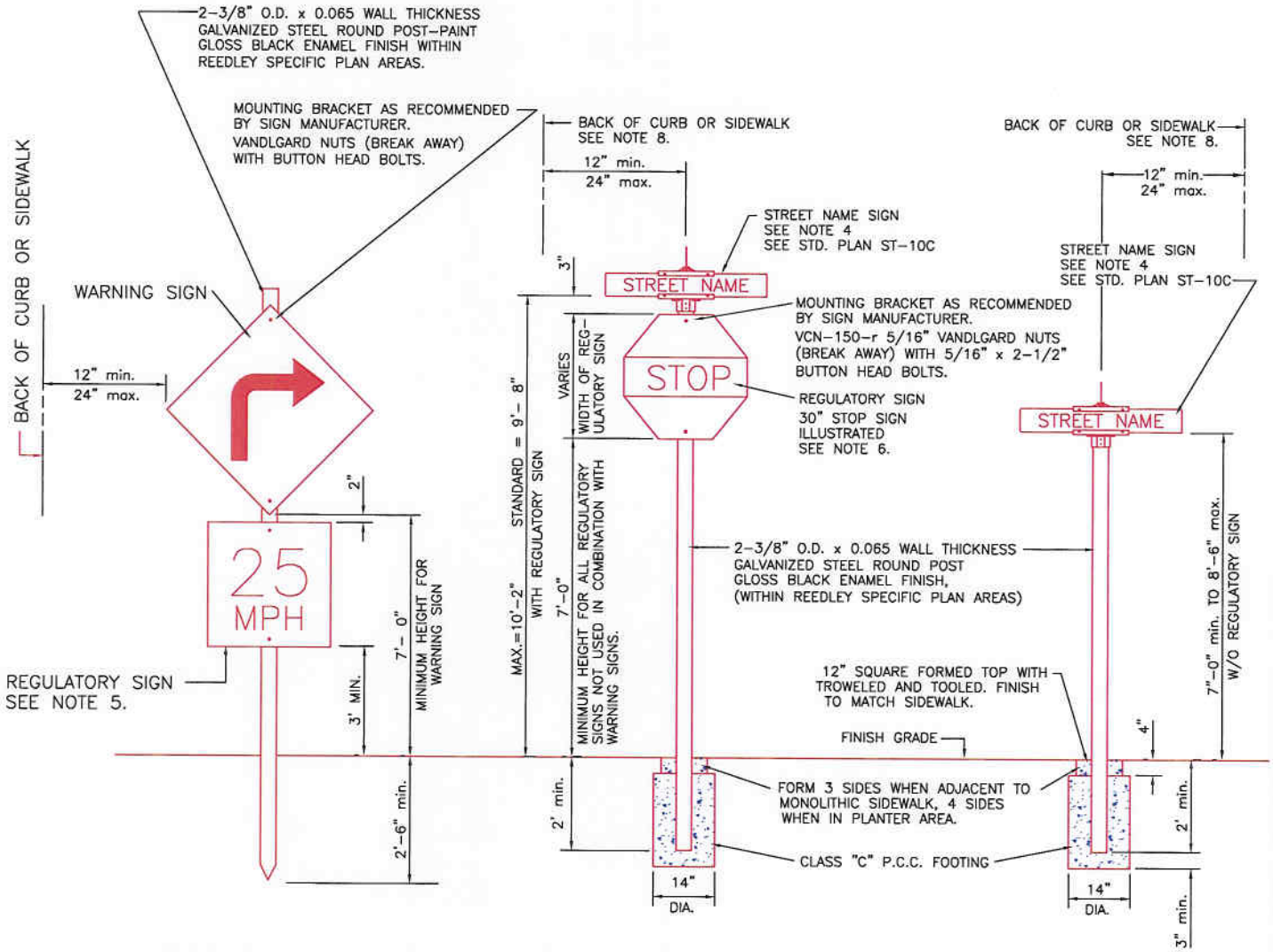

WARNING SIGN REGULATORY SIGN STREET NAME SIGN

NOTES:

1. ALL SIGNS, POST, HARDWARE, MOUNTING BRACKETS & INCIDENTALS SHALL BE SUPPLIED, ASSEMBLED, & INSTALLED COMPLETE AND IN ACCORDANCE WITH THIS STANDARD PLAN, THE STANDARD SPECIFICATIONS AND THE CALTRANS SPECIFICATIONS AND THE STATE OF CALIFORNIA, BUSINESS AND TRANSPORTATION AGENCY TRAFFIC MANUAL, LATEST EDITION.
2. ALL SIGN LOCATION SHALL BE DETERMINED BY THE CITY ENGINEER.
3. REGULATORY AND WARNING SIGNS SHALL BE PROVIDED AND INSTALLED COMPLETE AND IN PLACE AS REQUIRED BY THE CITY ENGINEER.
4. STREET NAME SIGN MAY BE PLACED ON A REGULATORY SIGN POST ONLY WHERE APPROVED IN ADVANCE BY THE CITY ENGINEER.
5. REGULATORY SIGN MAY BE PLACED ON A WARNING SIGN POST ONLY WHERE APPROVED IN ADVANCE BY THE CITY ENGINEER.
6. A 36-INCH SIZE STOP SIGN MAY BE REQUIRED IN SPECIAL SITUATIONS AS DETERMINED BY THE CITY ENGINEER.
7. ALL STEEL POST AND MOUNTING BRACKETS AND HARDWARE SHALL BE GALVANIZED AS SPECIFIED IN THIS PLAN AND IN ACCORDANCE WITH SECTION 75-1.05 OF THE CAL TRANS SPECIFICATIONS.
8. REFER TO THE CITY OF REEDLEY STANDARD PLAN ST-10A.

REGISTERED PROFESSIONAL ENGINEER BRUCE A. WEBBER C043156 Exp. 3-31-2008 CIVIL STATE OF CALIFORNIA

NOT TO SCALE

SIGN INSTALLATION	CITY ENGINEER PUBLIC WORKS DEPARTMENT ENGINEERING DIVISION 12-27-07 PLAN APPROVAL DATE	
	REVISIONS: DEC. 2007	CITY OF REEDLEY ST-10B

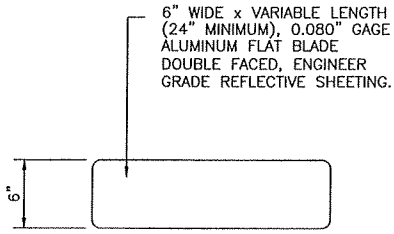

SIZES:
STD. LENGTHS – 24", 30", 36", 42"

NAME PLATE

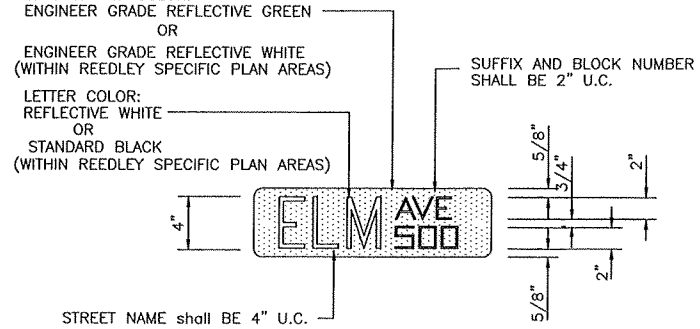

PAINTING LEGEND FOR NAME PLATE

NOTES:
1. ALL METAL SURFACES SHALL BE PREPARED IN ACCORDANCE WITH PAINT MANUFACTURES REQUIREMENTS PRIOR TO PLACING PAINT.
2. THE CITY PLANNER SHALL DESIGNATE STREET NAME, SUFFIX TYPE (i.e. AVE., LN., ST.) AND BLOCK NUMBER.

STREET SIGN HARDWARE TABLE

MANUFACTURER	BLADE HARDWARE STYLE	
	BLADE LENGTH	
	24"	30" or 36"
ZUMAR MANUFACTURING	606F	808F

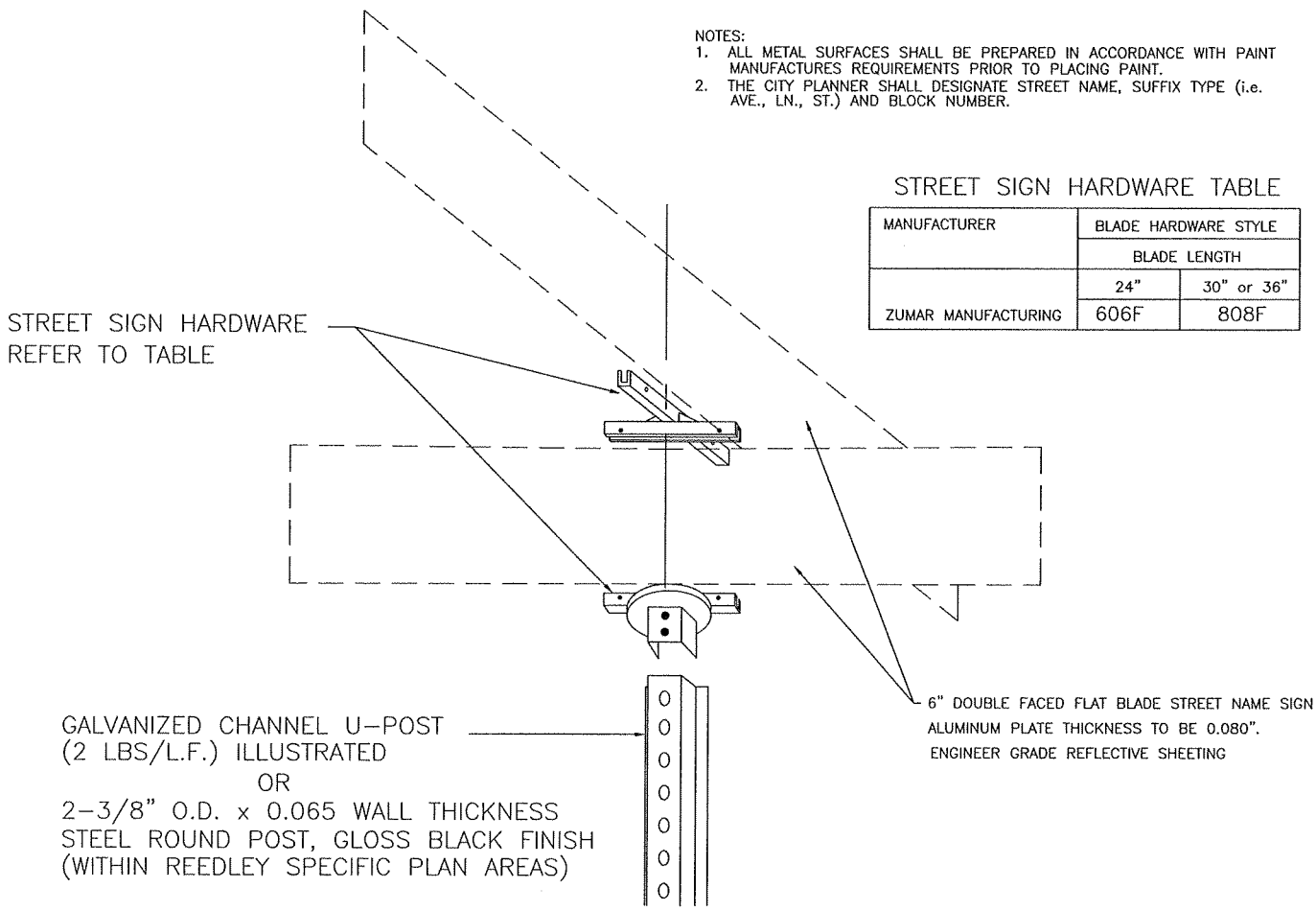

DOUBLE FACED STREET NAME SIGN HOLDER ASSEMBLY

NOTES:
1. ALL STEEL BRACKETS AND HARDWARE SHALL BE GALVANIZED IN ACCORDANCE WITH SECTION 75-1.05 OF THE CALTRANS SPECIFICATIONS.
2. WITHIN REEDLEY SPECIFIC PLAN AREAS ALL STREET NAME SIGN POLES SHALL BE 2-3/8" O.D. x 0.065 WALL THICKNESS STEEL ROUND POST, GLOSS BLACK FINISH.
3. WITHIN REEDLEY SPECIFIC PLAN AREAS ALL STREET NAME SIGN PLATE COLORS SHALL BE AS FOLLOWS:
   BACKGROUND COLOR: ENGINEER GRADE REFLECTIVE WHITE
   LETTER COLOR: STANDARD BLACK

NOT TO SCALE

STREET NAME SIGN	Andrew J. Benelli CITY ENGINEER PUBLIC WORKS DEPARTMENT ENGINEERING DIVISION	May 13, 2003 PLAN APPROVAL DATE
	REVISIONS: AUG. 1995 May 2003	CITY OF REEDLEY ST-10C

TYPE "B" ASPHALT CONCRETE	PAVEMENT PG 64-10
CLASS II AGGREGATE BASE	MINIMUM "R" VALUE = 78
AGGREGATE SUBBASE	MINIMUM "R" VALUE = 50
6" SCARIFIED AND COMPACTED	NATIVE SOIL (95% RELATIVE COMPACTION)

TYPICAL STANDARD STRUCTURAL CROSS SECTION

THICKNESS DESIGN CHART

"R" VALUE OF NATIVE MATERIAL	TRAFFIC INDEX	ASPHALT CONCRETE PAVEMENT INCHES	AGGREGATE BASE INCHES	AGGREGATE SUBBASE INCHES
BELOW 10	4.5	3	8	0
	6	3	6	8
	7	4	8	8
10 TO 19	4.5	3	8	0
	6	3	6	7
	7	4	7	7
20 TO 29	4.5	3	6	0
	6	3	6	5
	7	4	6	6.5
30 TO 39	4.5	3	4	0
	6	3	8	0
	7	4	9	0
40 TO 49	4.5	2.25	4	0
	6	3	6	0
	7	4	9.5	0
50 TO 59	4.5	2	4	0
	6	2.5	5	0
	7	3	8.5	0
60 TO 69	4.5	2	4	0
	6	4	0	0
	7	5.5	0	0
70 ABOVE	4.5	2	4	0
	6	3.5	0	0
	7	4.5	0	0

LOCAL RESIDENTIAL T.I. = 4.5;
COLLECTOR, ARTERIAL and LOCAL INDUSTRIAL T.I. = 6.0
MAJOR ARTERIAL T.I. = 7

NOTES:
1. ALL STREET STRUCTURAL SECTIONS SHALL BE BASED ON "R" VALUE TESTS AND APPROVED BY THE CITY ENGINEER.
2. PAVEMENT STRUCTURAL SECTION CALCULATIONS SHALL BE SUBMITTED TO THE CITY ENGINEER.
3. A SAFETY FACTOR OF 0.2 SHALL BE APPLIED IN PAVEMENT CALCULATIONS.
4. SOIL TEST DATA USED IN THE DESIGN CALCULATIONS SHALL BE FURNISHED BY A SOILS TESTING LABORATORY REPORT TO BE SIGNED AND SEALED BY A LICENSED ENGINEER.

REGISTERED PROFESSIONAL ENGINEER
BRUCE A. WEBBER
C043156
Exp. 3-31-2008
CIVIL
STATE OF CALIFORNIA

NOT TO SCALE

STREET STRUCTURAL SECTIONS

CITY ENGINEER
PUBLIC WORKS DEPARTMENT
ENGINEERING DIVISION

5-22-07
PLAN APPROVAL DATE

REVISIONS:
AUG. 1995, APRIL 2003,
MAY 2007

CITY OF REEDLEY

ST-11

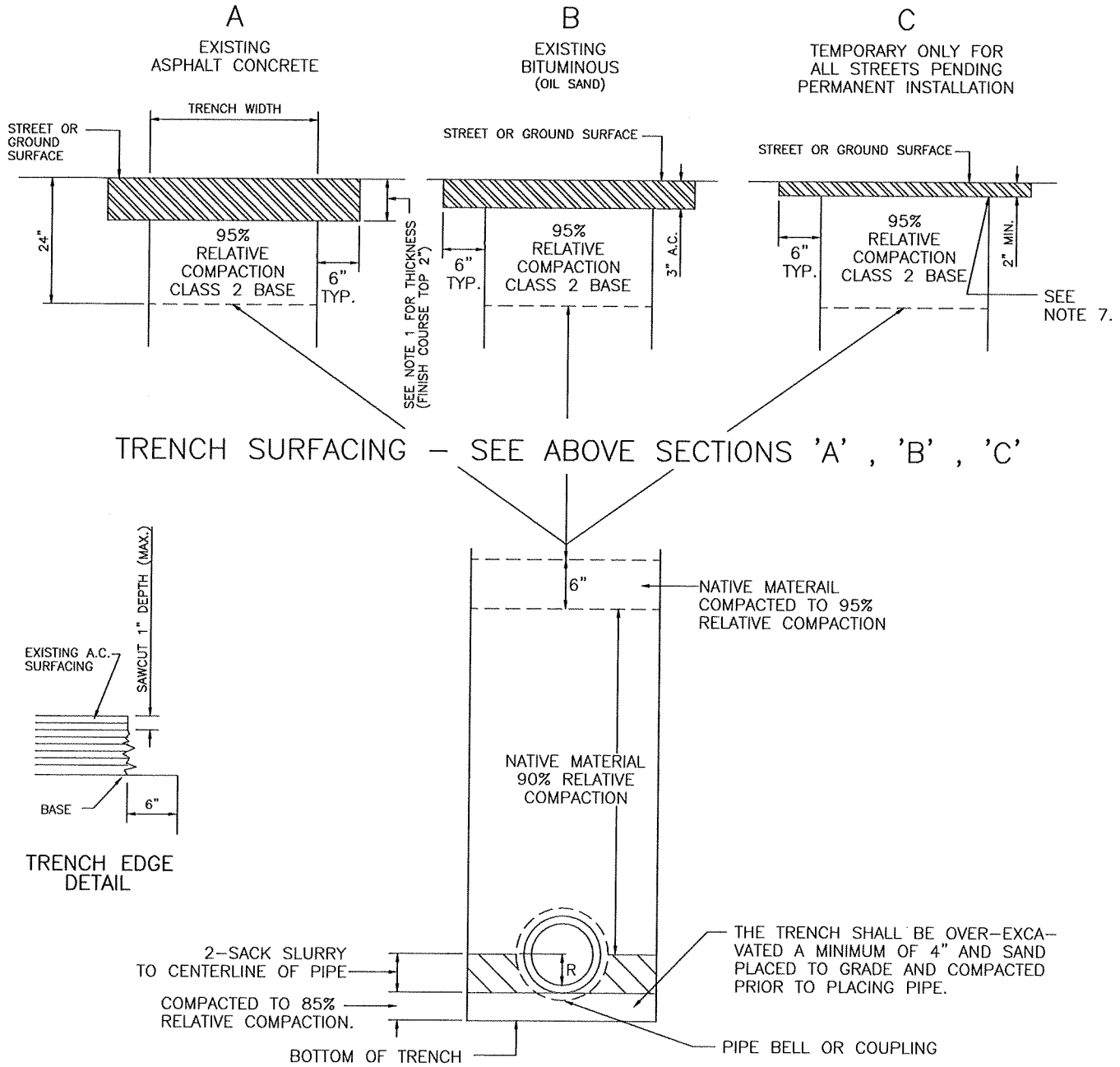

NOTES:

1. A.C. SHALL BE 7" THICK FOR MAJOR ARTERIALS, ARTERIALS AND COLLECTORS. A.C. SHALL BE 5" THICK FOR LOCAL STREETS.
2. TWO INCH (2") MINIMUM THICKNESS OF TEMPORARY RESURFACING AS SHOWN ON SECTION "C", SHALL BE INSTALLED IMMEDIATELY ON BACKFILLED TRENCHES IN ALL STREETS.
3. NO TRAFFIC SHALL BE ALLOWED TO CROSS OVER BACKFILLED TRENCHES IN THE ROADWAY PRIOR TO PLACEMENT OF TEMPORARY ASPHALT SURFACING AS SHOWN IN SECTION "C".
4. CALIFORNIA TEST METHOD NO. 216 SHALL BE USED TO DETERMINED ALL PERCENTAGES OF RELATIVE COMPACTION.
5. A.C. = ASPHALT CONCRETE
6. THE PAVEMENT SECTIONS SHOWN ABOVE ARE MINIMUM ONLY. IF THE EXISTING STRUCTURAL SECTION IS GREATER, IT SHALL BE MATCHED UNLESS OTHERWISE APPROVED BY THE CITY ENGINEER.
7. CUT BACK OR COLD MIX TO BE REMOVED PRIOR TO FINAL PAVING. REFER TO SEC. 12-6F, SEC. 15-3 OF THE CITY OF REEDLEY STANDARD SPECIFICATIONS.
8. A TACK COAT SHALL BE APPLIED TO THE ASPHALT CONCRETE VERTICAL EDGE OF TRENCH WALL PRIOR TO PLACEMENT OF FINAL ASPHALT SURFACING.

REGISTERED PROFESSIONAL ENGINEER BRUCE A. WEBBER C043156 Exp. 3-31-2006 CIVIL STATE OF CALIFORNIA

NOT TO SCALE

TRENCH BACKFILL AND SURFACE REPLACEMENT	Bruce Webber CITY ENGINEER PUBLIC WORKS DEPARTMENT ENGINEERING DIVISION	1-16-06 PLAN APPROVAL DATE
	REVISIONS: JAN. 2006	CITY OF REEDLEY ST-12

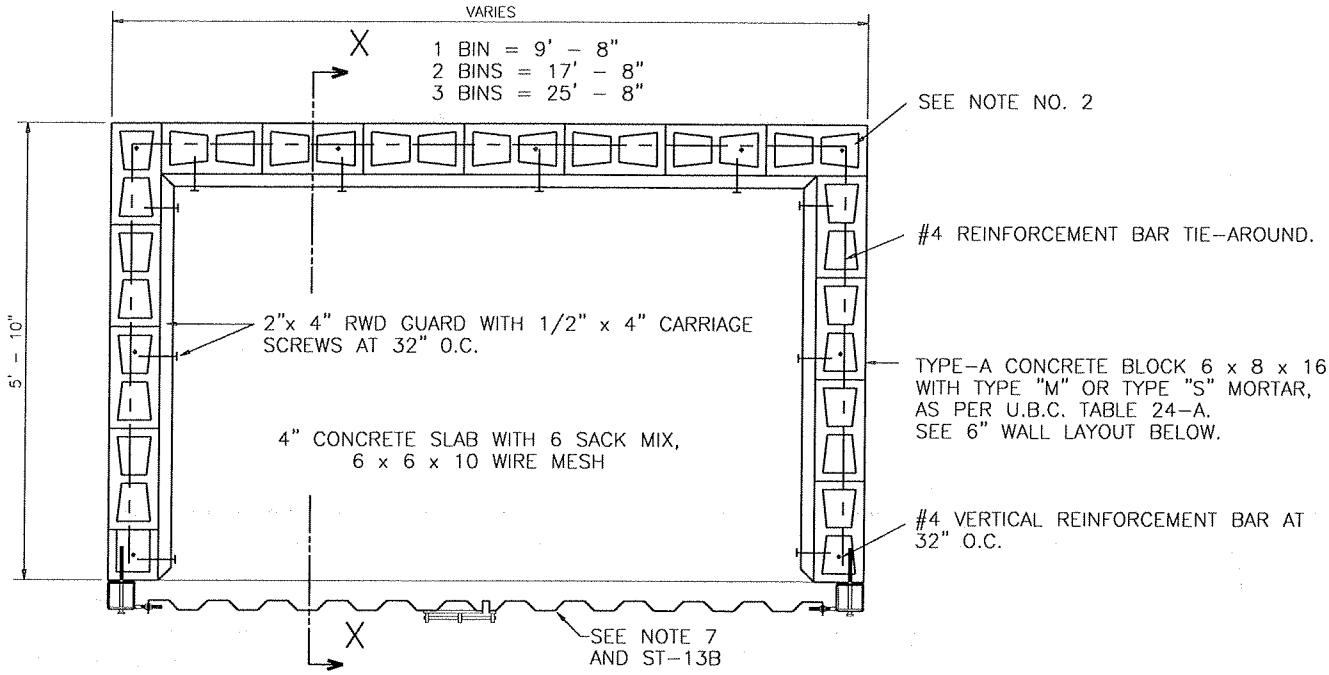

PLAN

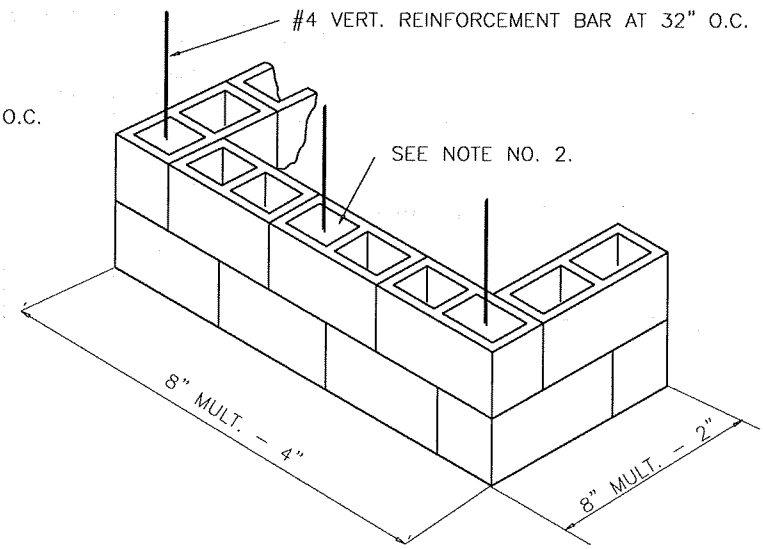

6" WALL LAYOUT

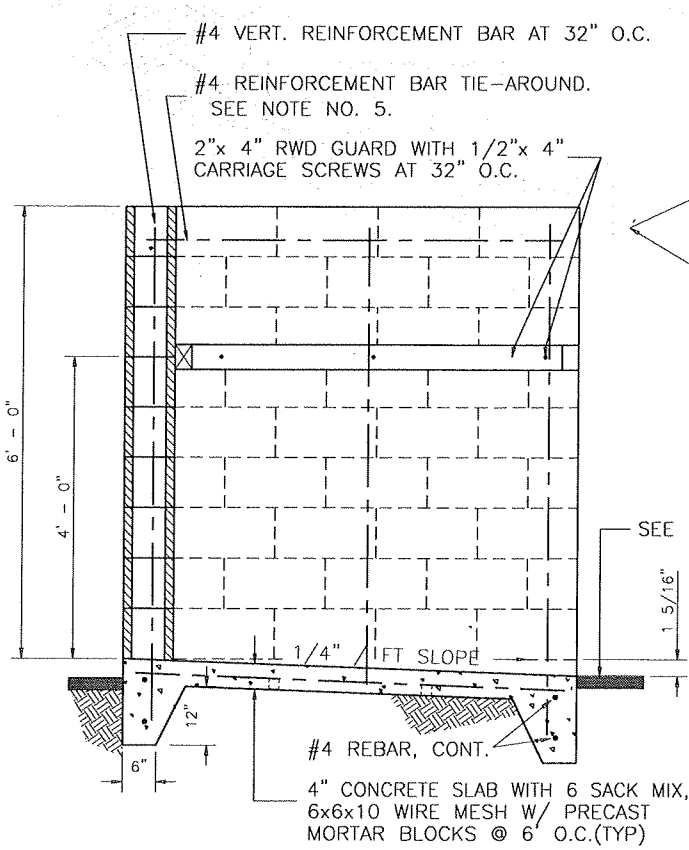

SECTION X-X

NOT TO SCALE

NOTES:

1. AT TIME OF LAYING, ALL MASONRY UNITS SHALL BE FREE OF EXCESSIVE DUST AND DIRT.
2. ALL CELLS WITH REINFORCEMENT SHALL BE FILLED WITH GROUT.
3. ALL REINFORCEMENT SHALL BE PLACED PRIOR TO GROUTING.
4. ALL CONSTRUCTION SHALL CONFORM TO U.B.C. SECTION 2415.
5. TOP LAYER OF CONCRETE BLOCK FULLBEDDED WITH MORTAR.
6. ASPHALT CONCRETE SURFACING ON APPROACH TO OPEN SIDE AS A MINIMUM. (PLACE TO TOP OF SLAB)
7. ENCLOSURE DOORS SHALL BE INSTALLED AS REQUIRED: RESIDENTIAL OR APTS. - STEEL DOORS COMMERCIAL - CHAIN LINK W/ WOOD SLATS IS ALLOWABLE

TRASH BIN ENCLOSURE	Andrew J. Benelli CITY ENGINEER COMMUNITY DEVELOPMENT DEPARTMENT ENGINEERING DIVISION	May 15, 2000 PLAN APPROVAL DATE
	REVISIONS: MAR. 1999	CITY OF REEDLEY ST-13A

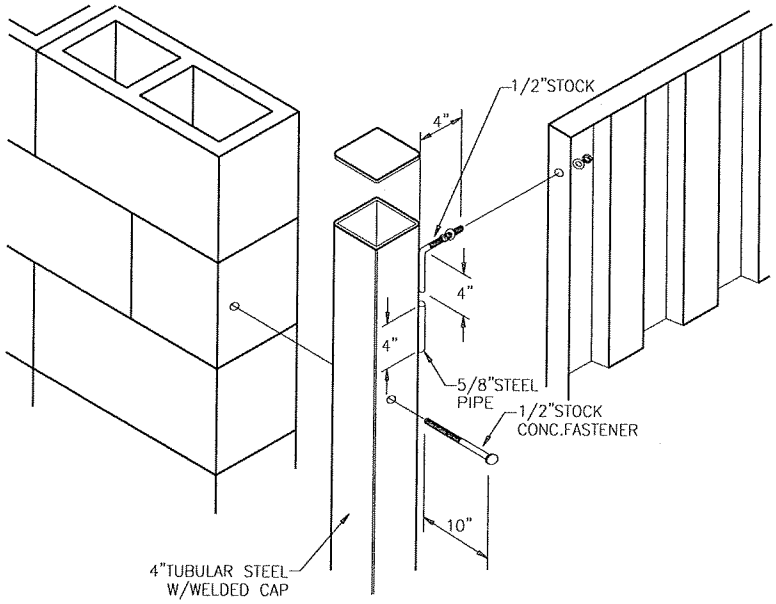

GATE POST DETAIL

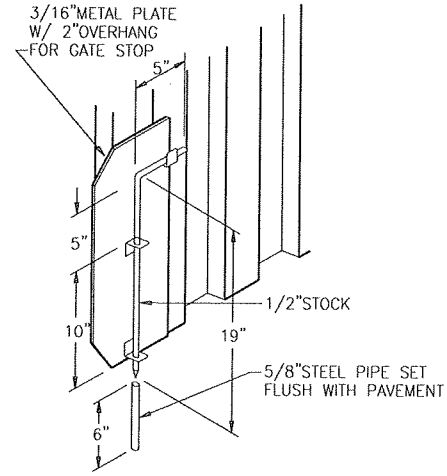

CANE BOLT DETAIL

NOTES

1. GATES TO BE PAINTED TO MATCH BUILDING ACCENT FEATURES.
2. DESIGN, ENGINEERING AND CONSTRUCTION NOT SPECIFICALLY NOTED SHALL BE IN ACCORDANCE WITH ACCEPTED INDUSTRY STANDARDS & OF FIRST QUALITY.

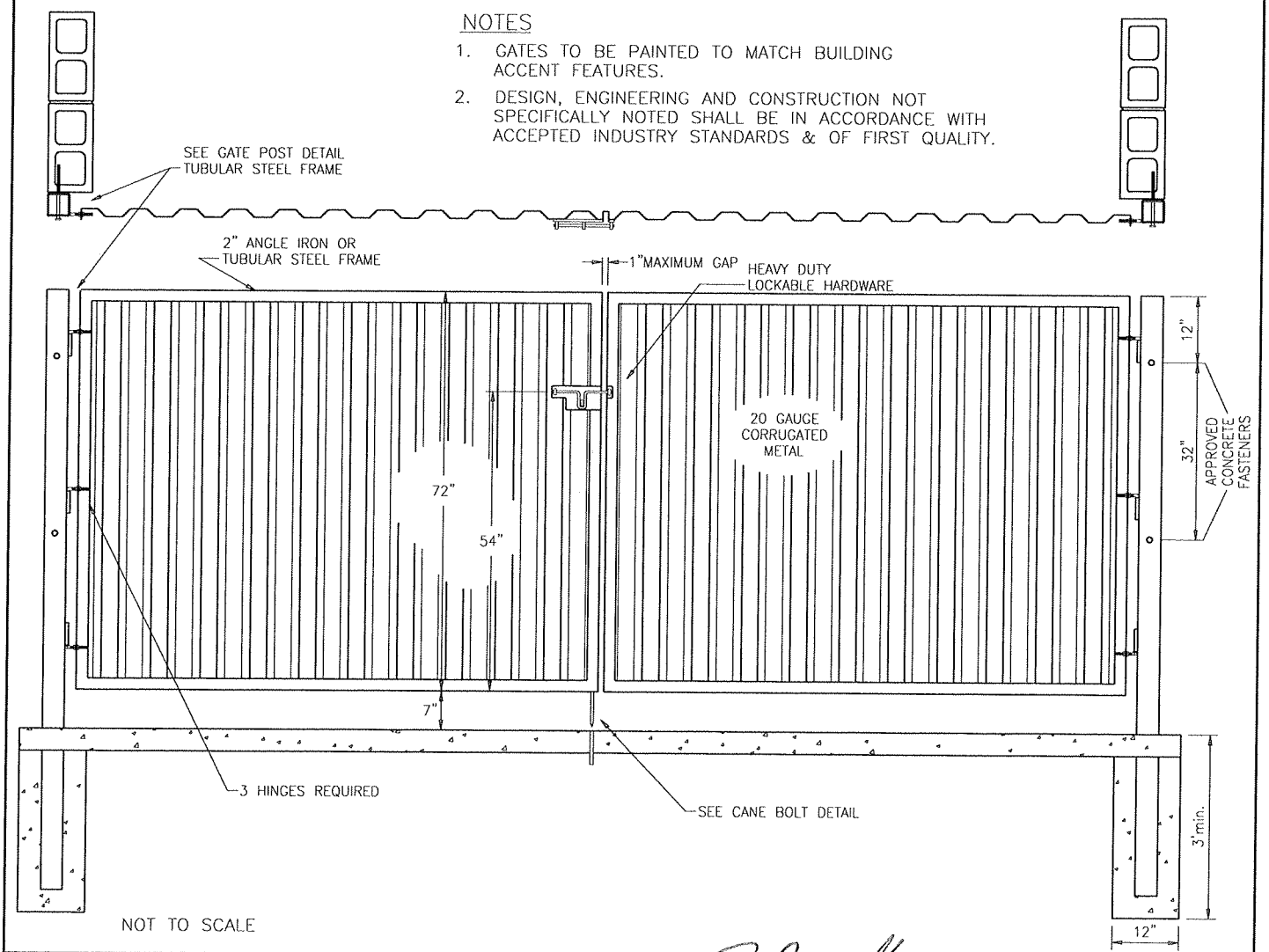

NOT TO SCALE

TRASH BIN ENCLOSURE
GATE DETAILS

Andrew J. Benetti
CITY ENGINEER
COMMUNITY DEVELOPMENT DEPARTMENT
ENGINEERING DIVISION

March 25, 1999
PLAN APPROVAL DATE

REVISIONS:
FEB. 1999

CITY OF REEDLEY

ST-13B

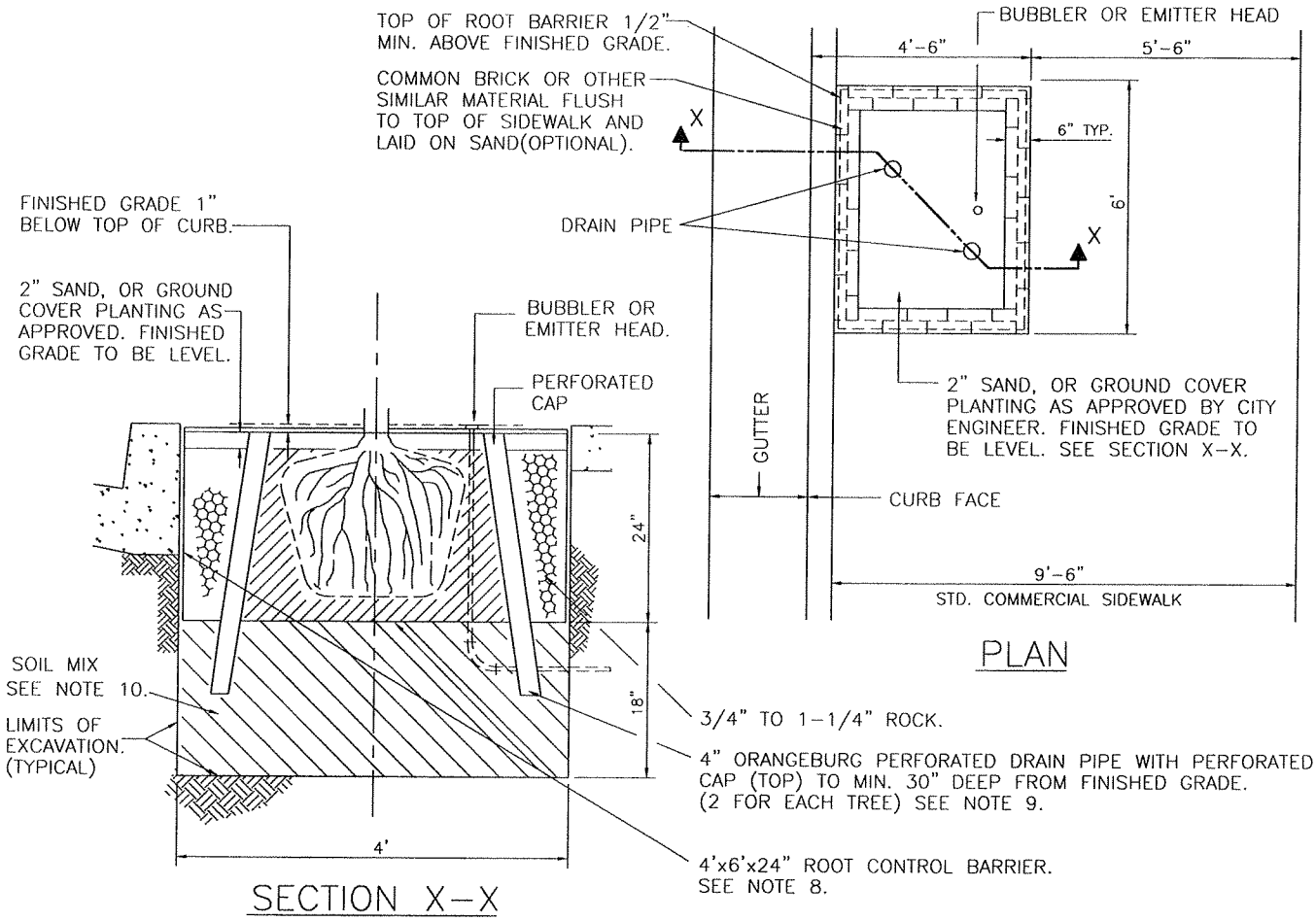

NOTES:

1. TREE VARIETY AND PLANTER SPACING TO CONFORM TO THE LIST OF APPROVED STREET TREES AND THE REQUIREMENTS OF THE CITY ENGINEER.
2. INSTALLATION SUBJECT TO ENCROACHMENT PERMIT ISSUED BY THE CITY ENGINEER.
3. IRRIGATION SYSTEM WITH DRIP EMITTER OR BUBBLER TO BE EXTENDED TO EACH TREE FROM INTERIOR PROPERTY WATER SYSTEM.
4. TREE MAINTENANCE INCLUDING WATERING, FERTILIZING AND LEAF PICKUP TO BE PROPERTY OWNERS RESPONSIBILITY. THE CITY WILL PRUNE TREES FOR TRAFFIC AND PEDESTRIAN CLEARANCE.
5. TREES SHALL BE SECURELY TIED TO STAKE 2"x2"x8' IN SIZE. REDWOOD OR TREATED FOUNDATION GRADE WOOD PLACED ON PREVAILING WINDWARD SIDE OF TREE WITH PLASTIC VINYL BASE TIES AS APPROVED BY THE CITY ENGINEER.
6. MINIMUM VERTICAL CLEARANCE TO LOWEST:
   a. LIMB OVERHANGING PARKING LANE = 14 FT.
   b. LIMB OVERHANGING SIDEWALK = 7 FT.
7. TO BE INSTALLED ALONG FRONTAGE OF COMMERCIAL OR INDUSTRIAL PROPERTY WITH PERMIT FOR DEVELOPMENT IN ACCORDANCE WITH APPLICABLE ORDINANCES AND RESOLUTIONS.
8. ROOT CONTROL BARRIER SHALL BE #UB 24-2 AS MANUFACTURED BY DEEP ROOT, 345 LORTON AVE #103, BURLINGAME, CA, OR AS APPROVED BY THE CITY ENGINEER. VERTICAL ROOT DEFLECTING RIBS ON PANEL MUST FACE INWARD, TOWARD ROOT BALL. TOP EDGE OF BARRIER TO BE 1/2" ABOVE GRADE.
9. FILL IN AROUND PERFORATED PIPE BELOW ROOT CONTROL BARRIER WITH 3/4" TO 1-1/4" ROCK TO 4" AROUND OUTSIDE PIPE.
10. SOIL MIX TO CONSIST OF SUITABLE NATIVE SOIL.

NOT TO SCALE

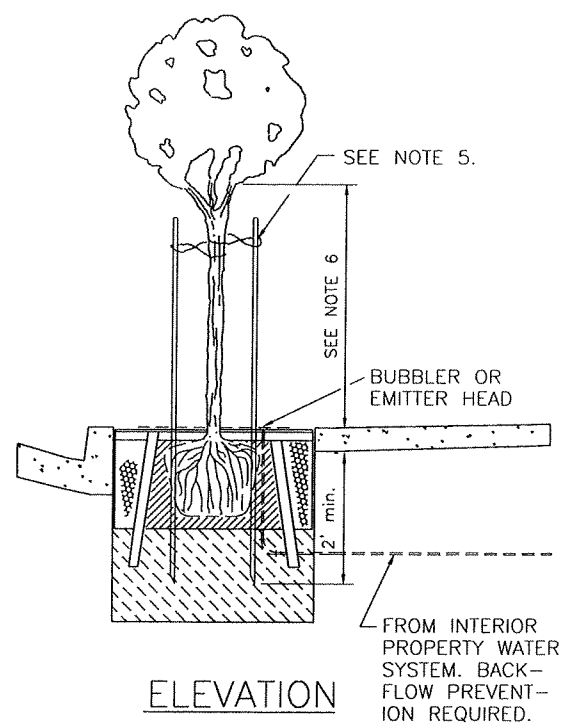

ELEVATION

TREE WELL STANDARD	Andrew J. Benetti CITY ENGINEER PUBLIC WORKS DEPARTMENT ENGINEERING DIVISION	June 18, 03 PLAN APPROVAL DATE
	REVISIONS: MAY 2001	CITY OF REEDLEY ST-14

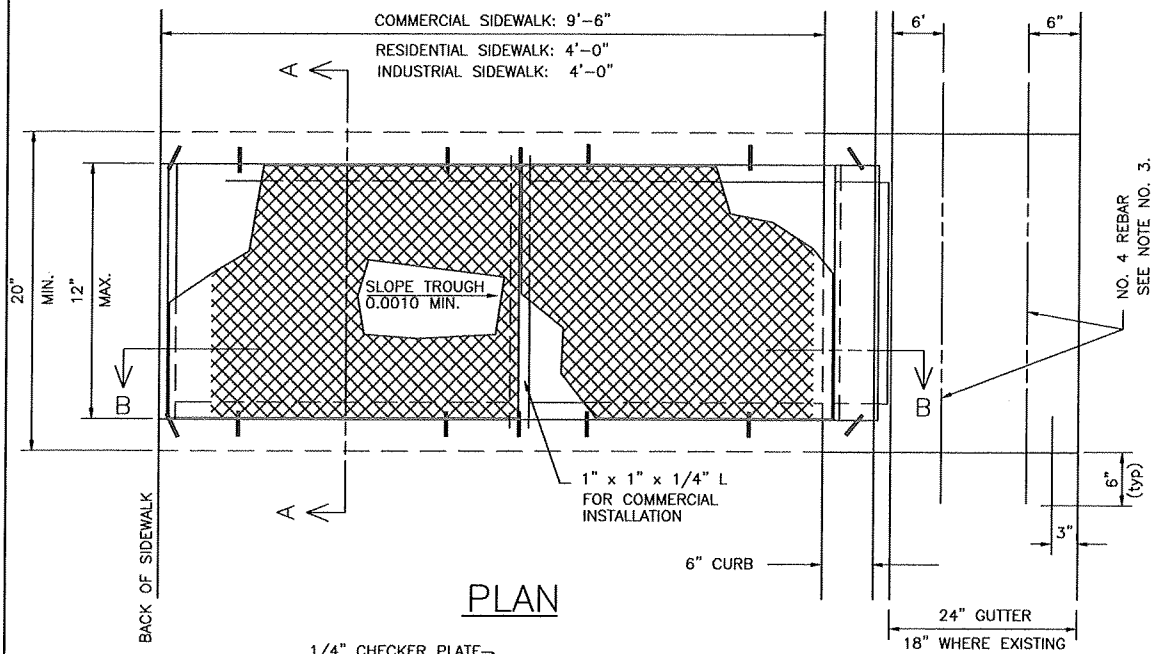

PLAN

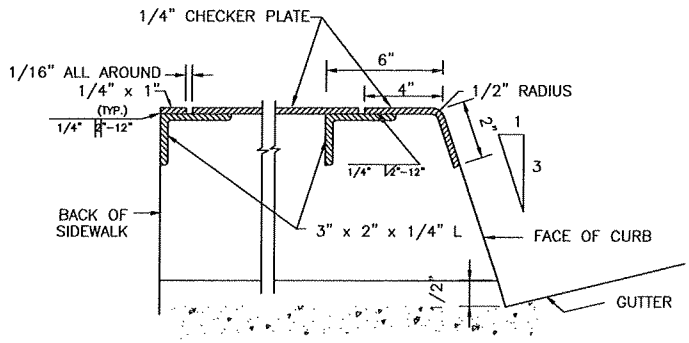

SECTION "BB"

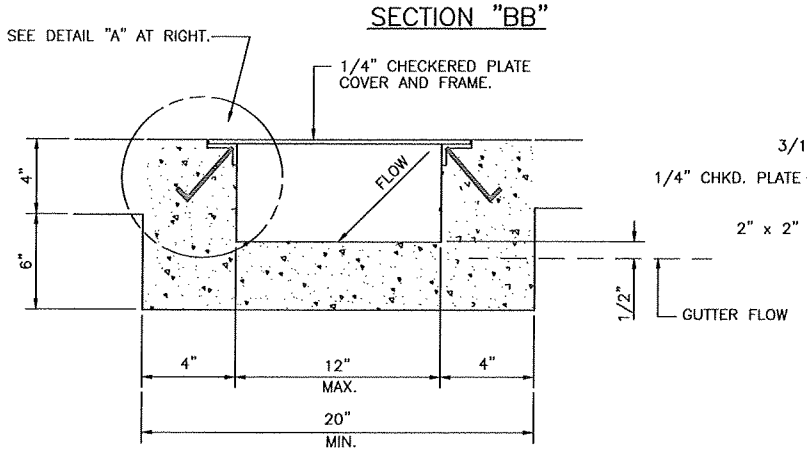

SECTION "AA"

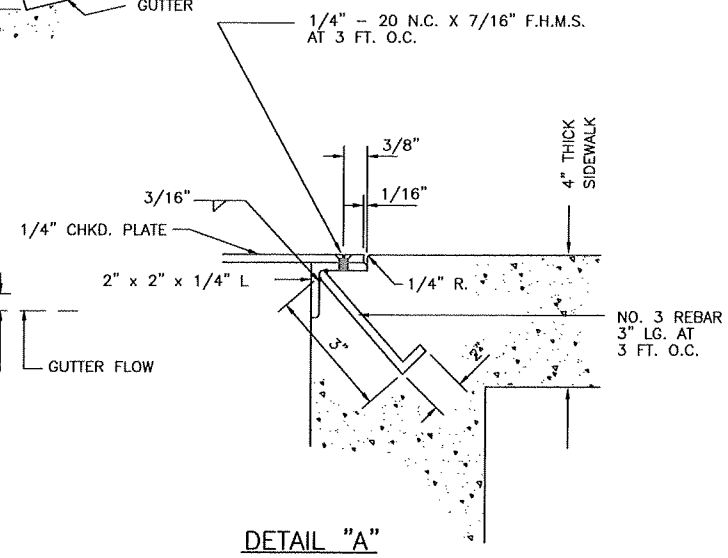

DETAIL "A"

NOTES:

1. 18" GUTTER TO BE INSTALLED WHERE SIMILAR EXIST.
2. P/L REFERS TO PROPERTY LINE.
3. REMOVE AND REPLACE CONCRETE CURB & GUTTER WITHIN LIMITS OF WORK WHERE CONC. CURB & GUTTER EXIST.
4. FLOOR OF TROUGH SHALL BE GIVEN A STEEL TROWELED FINISH
5. STRUCTURE SHALL BE CLASS "A" CONCRETE. EXPOSED SURFACES SHALL BE FINISHED AS PER CURB SPECIFICATIONS.
6. ALL PARTS SHALL BE STRUCTURAL GRADE STEEL.
7. ALL EXPOSED METAL SHALL BE PAINTED OR DIPPED WITH AN ASPHALTUM PAINT.

REGISTERED PROFESSIONAL ENGINEER
BRUCE A. WEBBER
C043156
Exp. 3-31-2006
CIVIL
STATE OF CALIFORNIA

NOT TO SCALE

SIDEWALK TROUGH DRAIN	CITY ENGINEER PUBLIC WORKS DEPARTMENT ENGINEERING DIVISION	1-2-06 PLAN APPROVAL DATE
	REVISIONS: DEC. 2005	CITY OF REEDLEY ST-15A

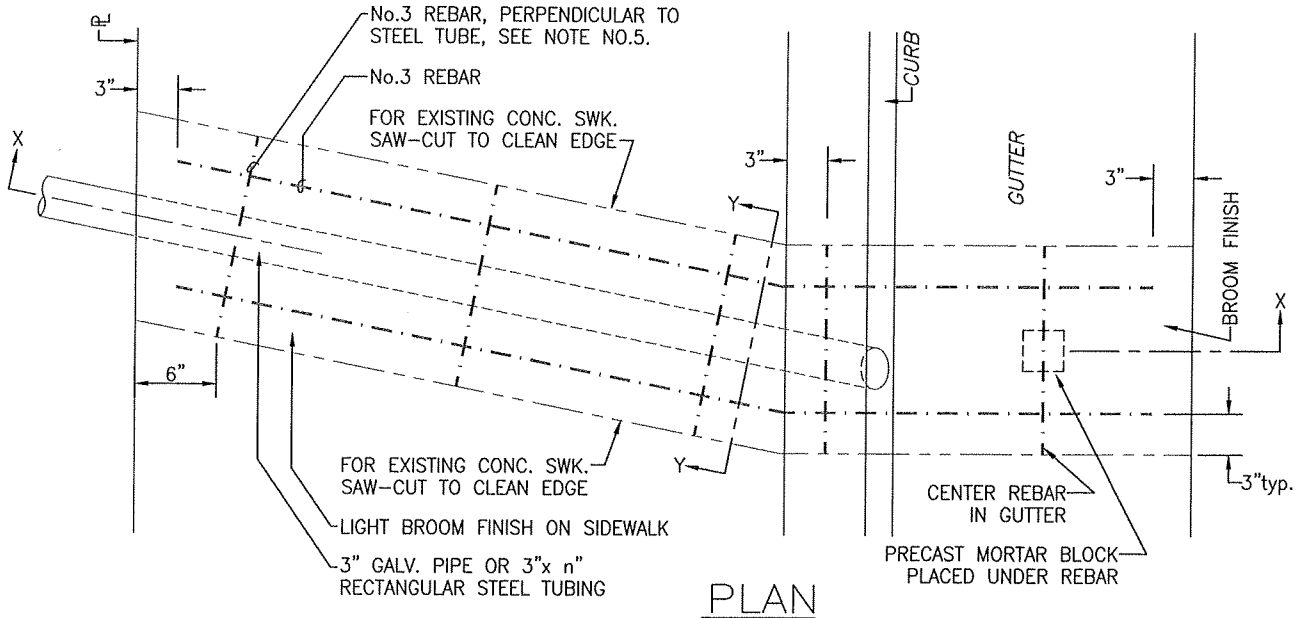

PLAN
N.T.S.

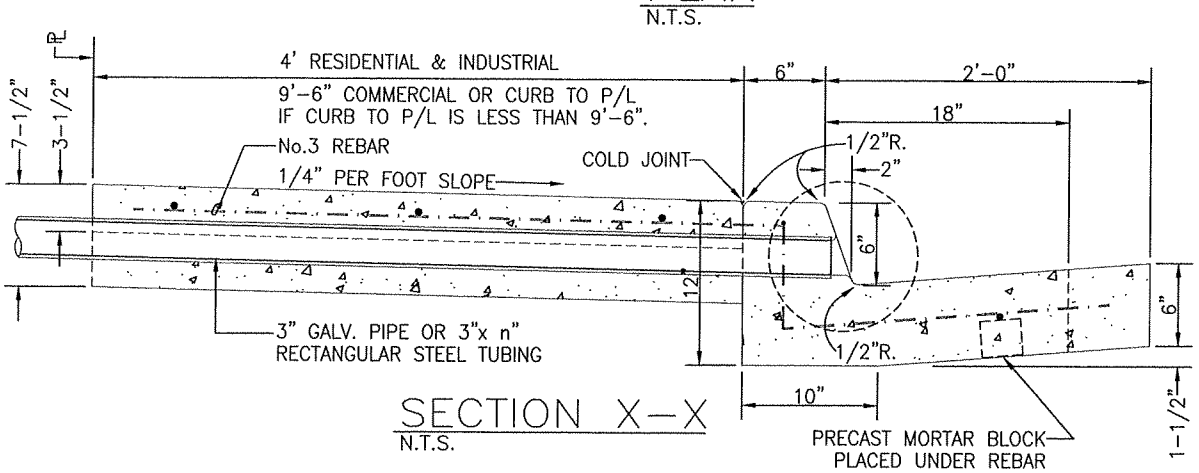

SECTION X-X
N.T.S.

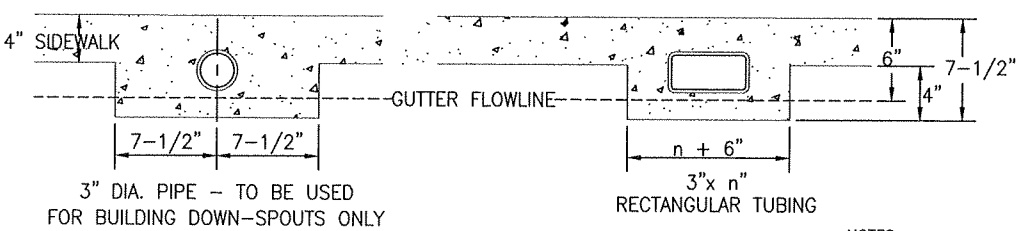

SECTION Y-Y
N.T.S.

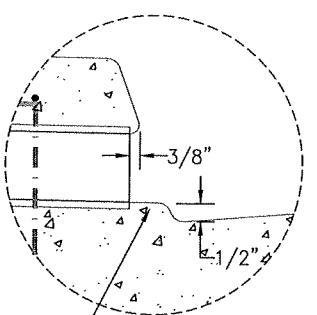

DETAIL
N.T.S.

SEE NOTE 9

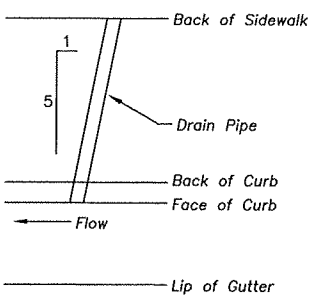

NOTES:

1. SIDEWALK DRAIN PIPE ONLY TO BE USED WITH THE APPROVAL OF THE CITY ENGINEER.
2. 18" GUTTER TO BE INSTALLED WHERE SIMILAR EXISTS.
3. P/L REFERS TO PROPERTY LINE.
4. REMOVE AND REPLACE CONCRETE CURB AND GUTTER WITHIN LIMITS OF WORK WHERE CONCRETE CURB & GUTTER EXIST.
5. REBAR SPACING PERPENDICULAR TO PIPE OR TUBING - 18"o.c. No. 3 REBAR SHALL BE REQUIRED WITHIN EXISTING SIDEWALK INSTALLATION ONLY.
6. 3" PIPE SHALL BE GALVANIZED PIPE. RECTANGULAR TUBING SHALL BE STEEL. PVC NOT ALLOWED WITHIN CITY R/W.
7. MINIMUM WALL THICKNESS OF RECTANGULAR TUBING IS 3/16".
8. NO DRAIN SHALL BE PERMITED IN DRIVE APPROACH AREAS.
9. DRAINS SHALL BE ANGLED THROUGH SIDEWALK IN DIRECTION OF GUTTER FLOW.
10. PERMITTED SIZE OF TUBING TO BE BASED ON DRAINAGE AREA & SHALL BE DETERMINED BY THE DESIGN ENGINEER.
11. ALL CONCRETE SHALL BE CLASS 'A' AND HAVE A SLUMP WITHIN 2.5" TO 5.5".
12. SUBGRADE PREPARATION SHALL BE CONSTRUCTED TO TRUE GRADE & CROSS-SECTION, WITH COMPACTION TO 90% TO A DEPTH OF 0.5'.

SIDEWALK DRAIN PIPE

Andrew J. Benelli
CITY ENGINEER
PUBLIC WORKS DEPARTMENT
ENGINEERING DIVISION

May 2, 2003
PLAN APPROVAL DATE

REVISIONS
MAY 2000
APRIL 2003

CITY OF REEDLEY
ST-15B

CHAIN LINK FENCE

NOT TO SCALE

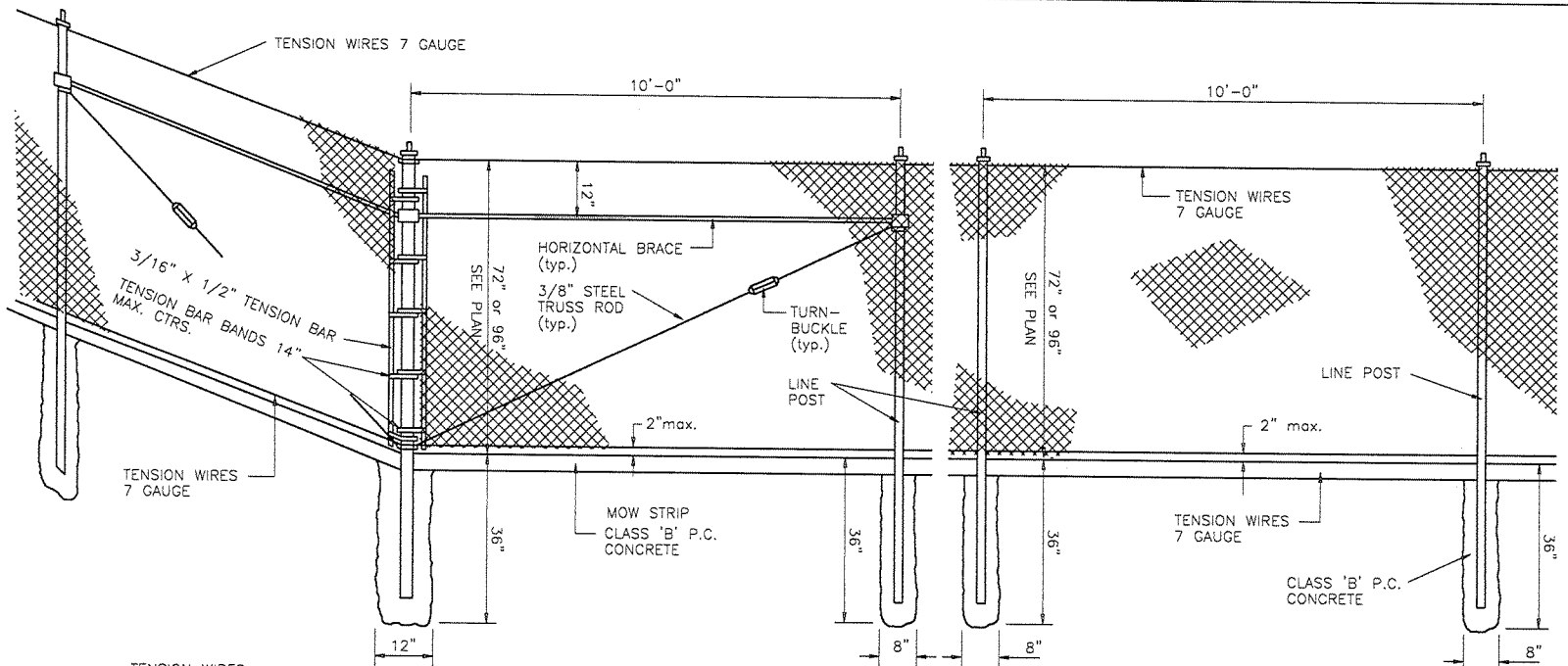

CORNER POST

LINE POST

TYPE CL-6 = 72" FABRIC - 11 GAUGE
TYPE CL-8 = 96" FABRIC - 9 GAUGE

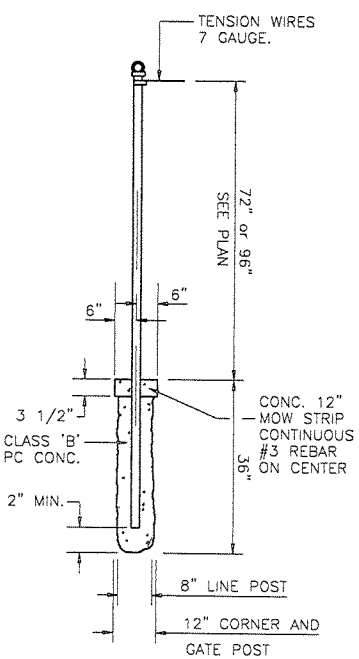

FOOTING

TYPICAL MEMBER DIMENSIONS

FENCE HEIGHT	LINE POSTS			END, LATCH and CORNER POST			BRACES			
	ROUND (I.D.)	H	ROLL FORMED	ROUND (I.D.)	ROLL FORMED		ROUND (I.D.)	H	ROLL FORMED	
6 FT. & LESS	1 1/2"	1 7/8"X1 5/8"	1 3/4"X1 3/4"	2"	3 1/2"X3 1/2"	2"X1 3/4"	1 1/4"	1 1/2"X1 5/16"	1 5/8"X1 1/4"	1 3/4"X1 1/4"
OVER 6 FT.	2"	2 1/4"X2"	2"X1 3/4"	2 1/2"	3 1/2"X3 1/2"	2 1/2"X2 1/2"	1 1/4"	1 1/2"X1 5/16"	1 5/8"X1 1/4"	1 3/4"X1 1/4"

GATE POST DIMENSIONS (SEE STD. PLAN ST-17)

FENCE HEIGHT	GATE WIDTHS	NOMINAL I.D.	WEIGHT PER FOOT
6'-0" AND LESS	UP THRU 6 FT.	2 1/2"	4.95
	OVER 6 FT. THRU 12 FT.	4"	10.79
	OVER 12 FT. THRU 18 FT.	5"	14.62
	OVER 18 FT. THRU 24 FT. MAX.	6"	18.97
OVER 6'-0"	UP THRU 6 FT.	3"	7.58
	OVER 6 FT. THRU 12 FT.	5"	14.62
	OVER 12 FT. THRU 18 FT.	6"	18.97
	OVER 18 FT. THRU 24 FT. MAX.	8"	28.55

NOTE: ABOVE POST DIMENSIONS AND WEIGHTS ARE MINIMUMS. LARGER SIZES MAY BE USED ON APPROVAL OF THE CITY ENGINEER.

CITY ENGINEER
COMMUNITY DEVELOPMENT DEPARTMENT
ENGINEERING DIVISION

PLAN APPROVAL DATE

REVISIONS:
FEB. 1999

CITY OF REEDLEY

ST-16

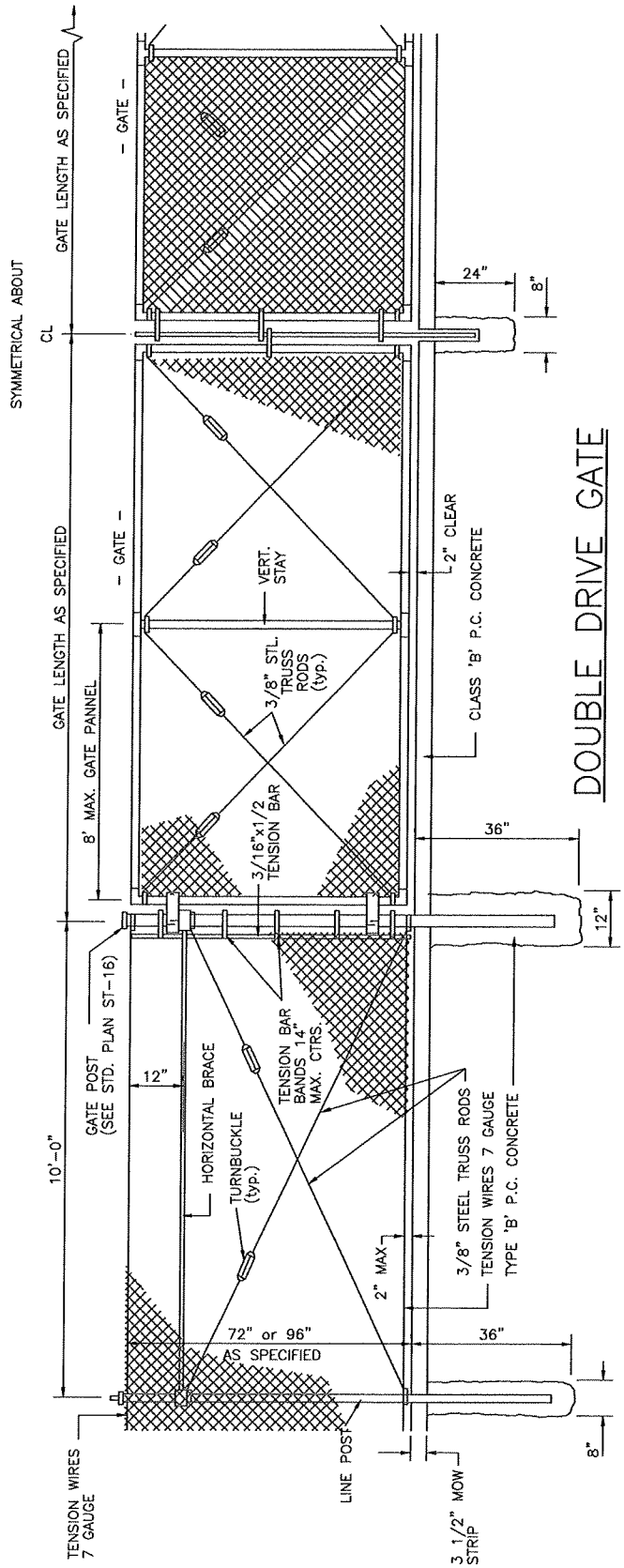

DOUBLE DRIVE GATE

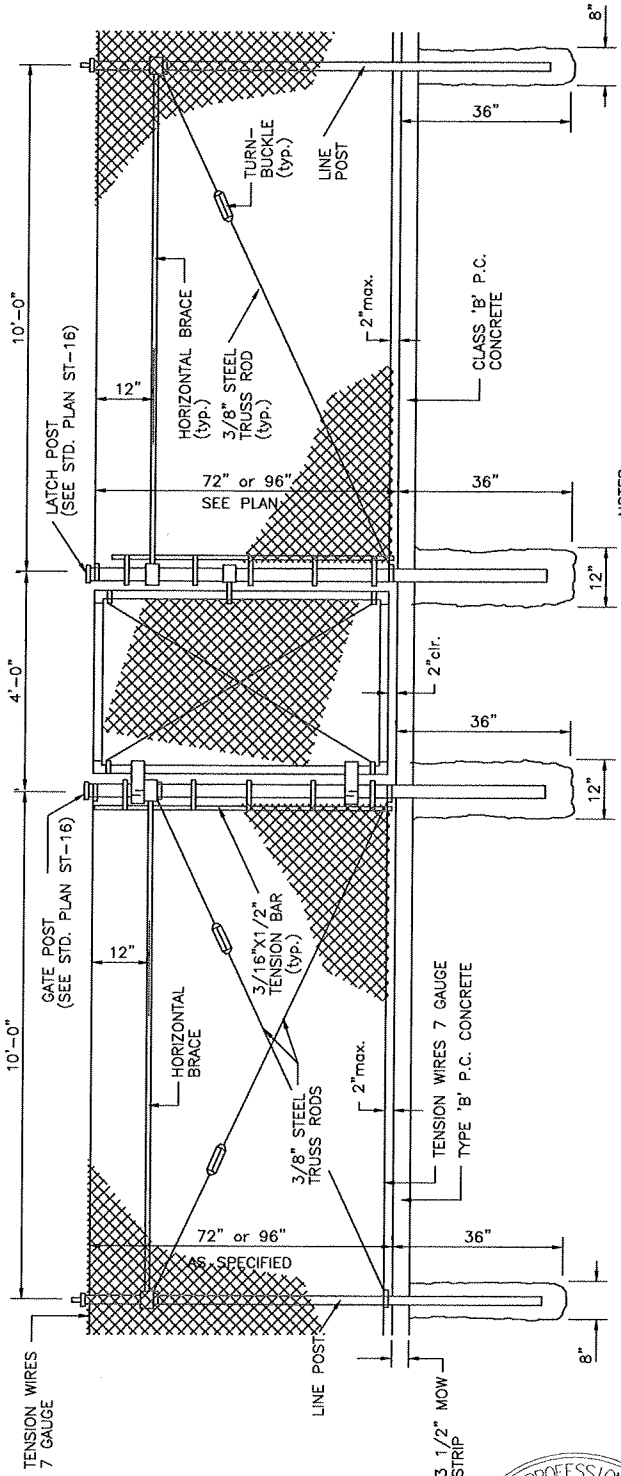

4 FT. PERSONAL GATE

NOTES:
1. TUBULAR POST SHALL BE FITTED WITH RAIN PROOF TOPS.
2. GATE FRAME SHALL BE CONSTRUCTED OF NOT LESS THAN 1 1/2" PIPE AND VERT. STAY MEMBERS SHALL BE CONSTRUCTED OF NOT LESS THAN 1" PIPE.

REGISTERED PROFESSIONAL ENGINEER
BRUCE A. WEBBER
C043156
Exp. 3-31-2006
CIVIL
STATE OF CALIFORNIA

NOT TO SCALE

CHAIN LINK FENCE
DRIVE AND PERSONAL GATES

CITY ENGINEER
PUBLIC WORKS DEPARTMENT
ENGINEERING DIVISION

12-18-05
PLAN APPROVAL DATE

REVISIONS:
DEC. 2005

CITY OF REEDLEY

ST-17

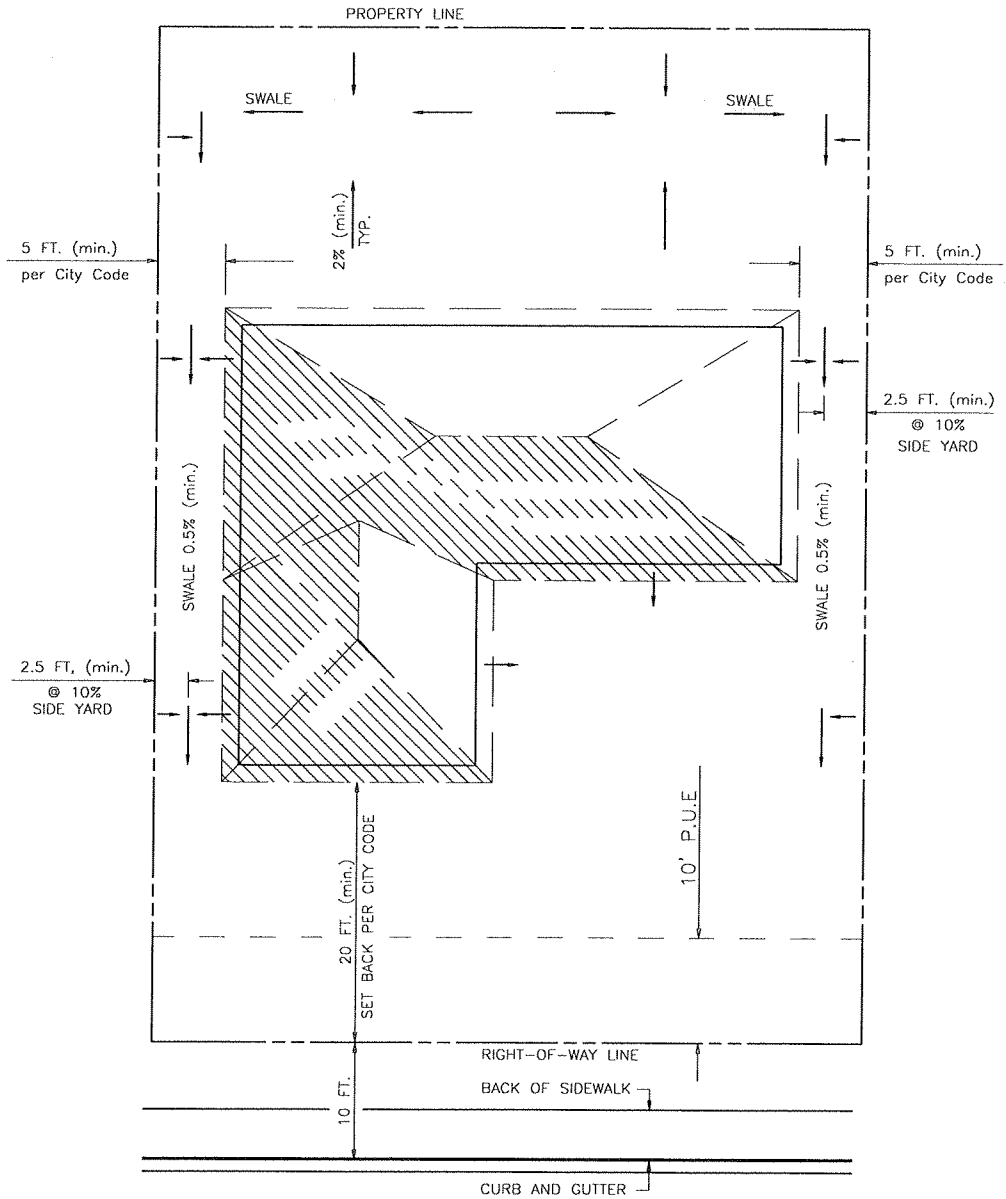

PLAN

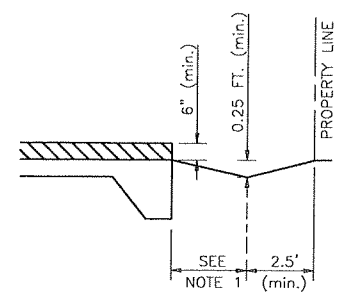

SIDE YARD X-SECTION

NOTES:

1. A MINIMUM OF 2% SLOPE FOR A MINIMUM OF 5 FEET FOR DRAINAGE AWAY FROM BUILDING EXCEPT SIDE YARD SLOPE MAY BE 2.5 FEET AT 10% MINIMUM SLOPE AWAY FROM BUILDING.
2. NO WATER SHALL DRAIN TO ADJACENT PROPERTY. ALL LOT DRAINAGE SHALL BE TO CITY STREET.
3. ALL GRADING SHALL COMPLY TO SECTION 7014-C OF THE 1991 UNIFORM BUILDING CODE.
4. COMPACTION REPORTS SHALL BE PREPARED BY AN APPROVED TESTING AGENCY UPON COMPLETION OF GRADING.
5. THE OVERALL BUILDING SITE SHALL HAVE A MINIMUM SLOPE OF 0.5% IN ALL AREAS TO AN APPROVED DRAINAGE FACILITY OR PUBLIC STREET.
6. BUILDING SHALL HAVE THE FOUNDATION WALL OR CONCRETE FLOOR SLAB CONSTRUCTED AT LEAST TWELVE INCHES (12") ABOVE THE CROWN OF THE ADJOINING STREET OR 12" ABOVE THE HIGHEST POINT OF TOP OF CURB ALONG THE PROPOSED SITE.

NOT TO SCALE

TYPICAL LOT DRAINAGE RESIDENTIAL	Andrew J. Benelli CITY ENGINEER COMMUNITY DEVELOPMENT DEPARTMENT ENGINEERING DIVISION	March 25, 99 PLAN APPROVAL DATE
	REVISIONS: AUG. 1995	CITY OF REEDLEY ST-18A

INTERIOR LOTS
WITH GRADE DIFFERENCES
LESS THAN TWO FEET

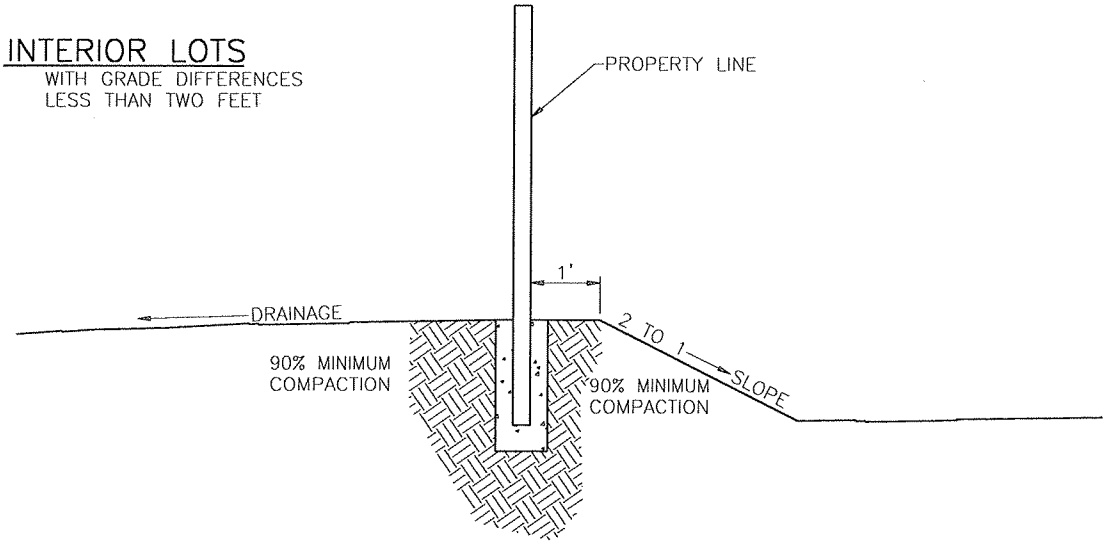

INTERIOR LOTS
WITH GRADE DIFFERENCES
GREATER THAN TWO FEET

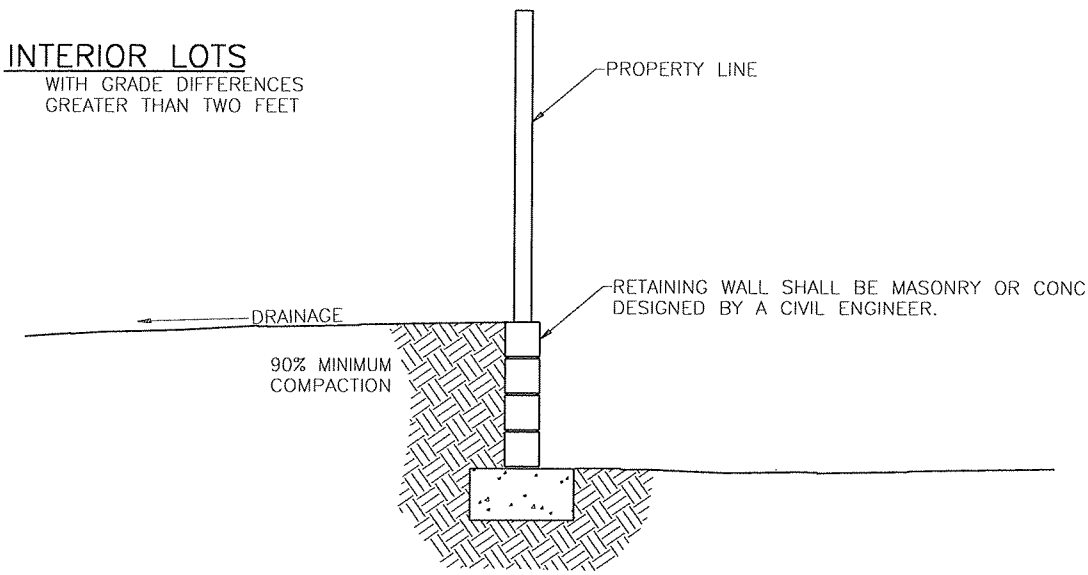

EXTERIOR LOTS
WITH GRADE DIFFERENCES

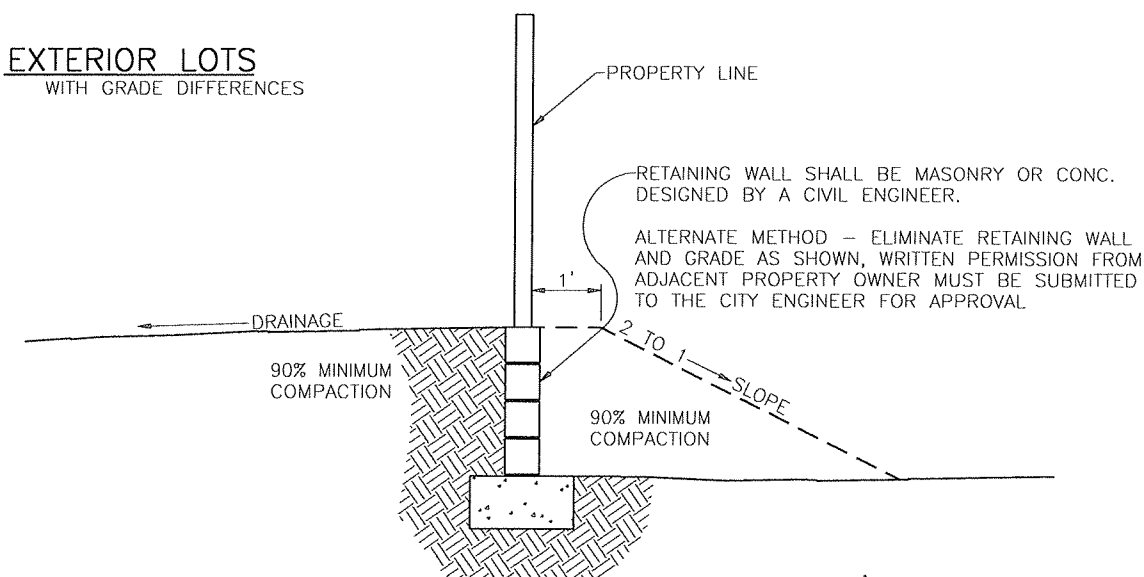

LOT LINE GRADING STANDARD	Andrew J. Benelli CITY ENGINEER COMMUNITY DEVELOPMENT DEPARTMENT ENGINEERING DIVISION	March 26, 99 PLAN APPROVAL DATE
	REVISIONS FEB. 1999	CITY OF REEDLEY ST–18B

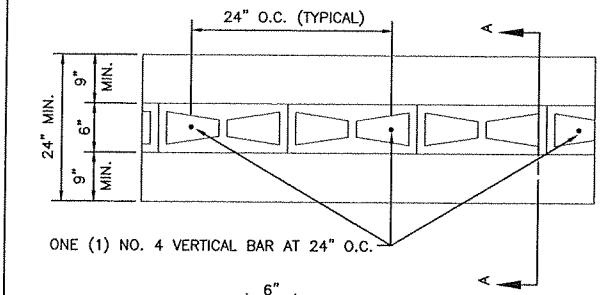

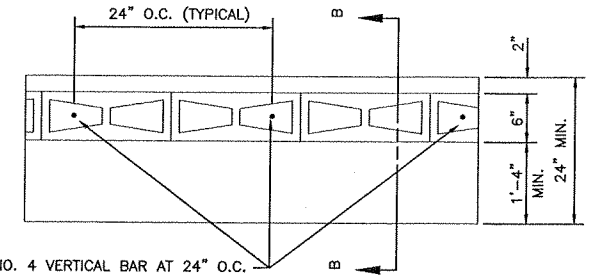

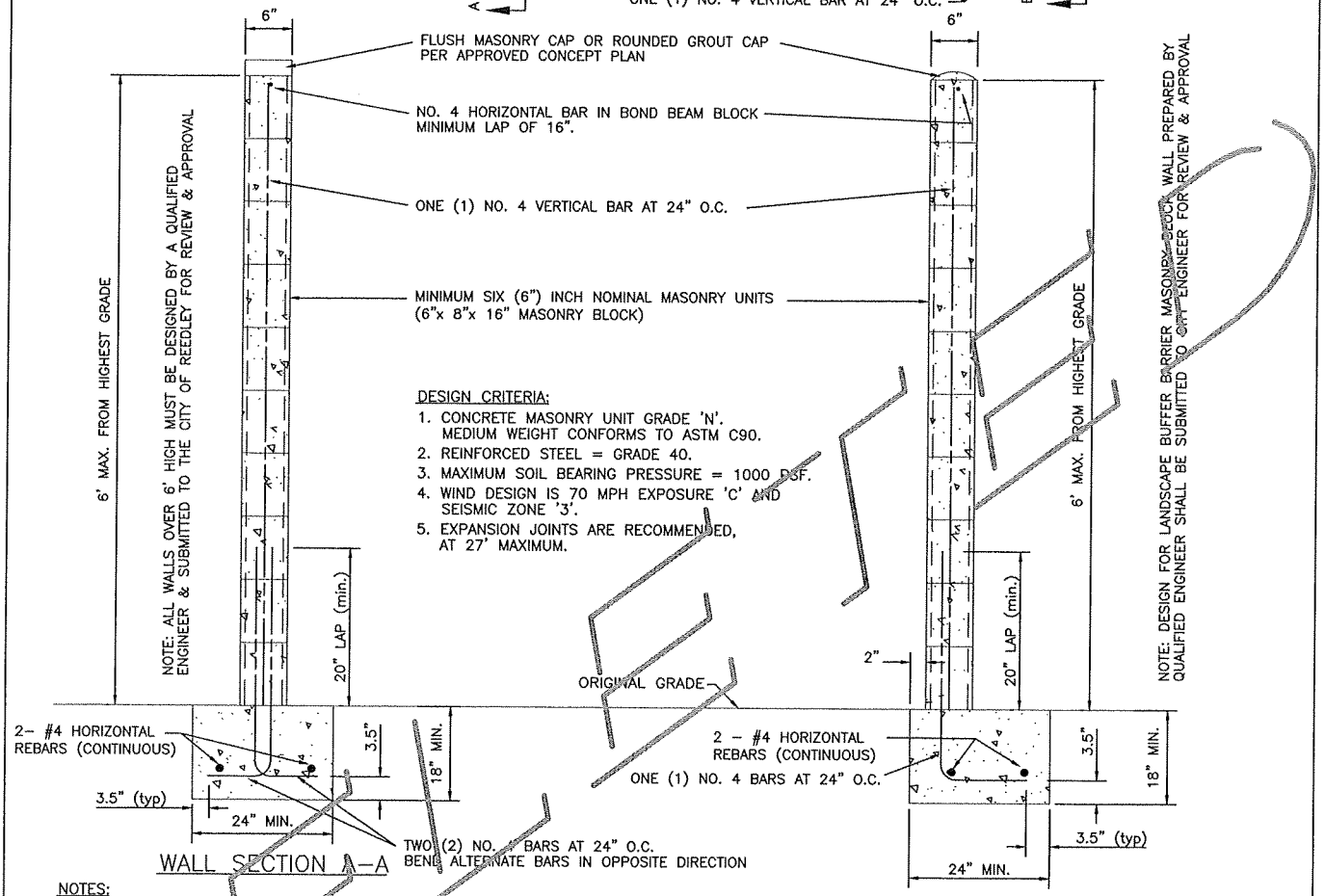

DESIGN CRITERIA:

1. CONCRETE MASONRY UNIT GRADE 'N'. MEDIUM WEIGHT CONFORMS TO ASTM C90.
2. REINFORCED STEEL = GRADE 40.
3. MAXIMUM SOIL BEARING PRESSURE = 1000 PSF.
4. WIND DESIGN IS 70 MPH EXPOSURE 'C' AND SEISMIC ZONE '3'.
5. EXPANSION JOINTS ARE RECOMMENDED, AT 27' MAXIMUM.

NOTES:

1. ALL CONSTRUCTION SHALL COMPLY WITH THE UNIFORM BUILDING CODE.
2. ALL CELLS WITH REBAR SHALL BE GROUT FILLED.
3. ALL MASONRY UNITS SHALL COMPLY WITH THE LATEST ADOPTED UNIFORM BUILDING CODE AND U.B.C. STANDARD 24-4 GRADE N.
4. ALL MASONRY WALLS SHALL BE INSPECTED BY THE CITY BUILDING OFFICIAL.
5. DEPTHS OF FOOTINGS ARE INTO NATURAL UNDISTURBED SOIL OR TESTED AND APPROVED COMPACTED FILL.
6. ALL MASONRY UNITS SHALL BE MINIMUM f'm = 1350 PSI.
7. REINFORCING STEEL SHALL BE DEFORMED BARS MINIMUM GRADE 40.
8. FOOTING CONCRETE SHALL BE CLASS 'B' A MINIMUM Fc = 2800 PSI AT 28 DAYS.
9. BEARING SOIL SHALL BE COMPACTED TO 90% OF MAX. DRY DENSITY AS DETERMINED BY ASTM D-1557 TO A DEPTH OF 1' BELOW BOTTOM OF FOOTING.
10. THIS DESIGN SHALL NOT BE USED FOR RETAINING EARTH.
11. MORTAR SHALL BE TYPE-S (MINIMUM 1800 PSI): ONE (1) PART CEMENT, TYPE I TO ONE HALF (1/2) PART LIME PUTTY OR HYDRATED LIME AND FOUR AND ONE HALF (4 1/2) PART SAND (MAXIMUM).
12. GROUT SHALL BE A MAXIMUM 2000 PSI AT 28 DAYS: ONE (1) PART CEMENT - THREE (3) PARTS SAND - TWO (2) PARTS PEA GRAVEL
13. EARTH COLORED MATERIALS SHALL BE USED WHERE RESIDENTIAL AREAS ARE AFFECTED. A MINIMUM OF 25% OF STREET SIDE MASONRY TO BE TEXTURED.
14. ANTI-GRAFFITI CLEAR COAT SHALL BE APPLIED TO STREET SIDE OF MASONRY WALL PER MANUFACTURES SPECIFICATIONS.

NOT TO SCALE

TYPICAL RESIDENTIAL SIX (6) INCH MASONRY BLOCK WALL (NON-RETAINING)	CITY ENGINEER PUBLIC WORKS DEPARTMENT ENGINEERING DIVISION	PLAN APPROVAL DATE
	REVISIONS: AUG 2004	CITY OF REEDLEY ST-19

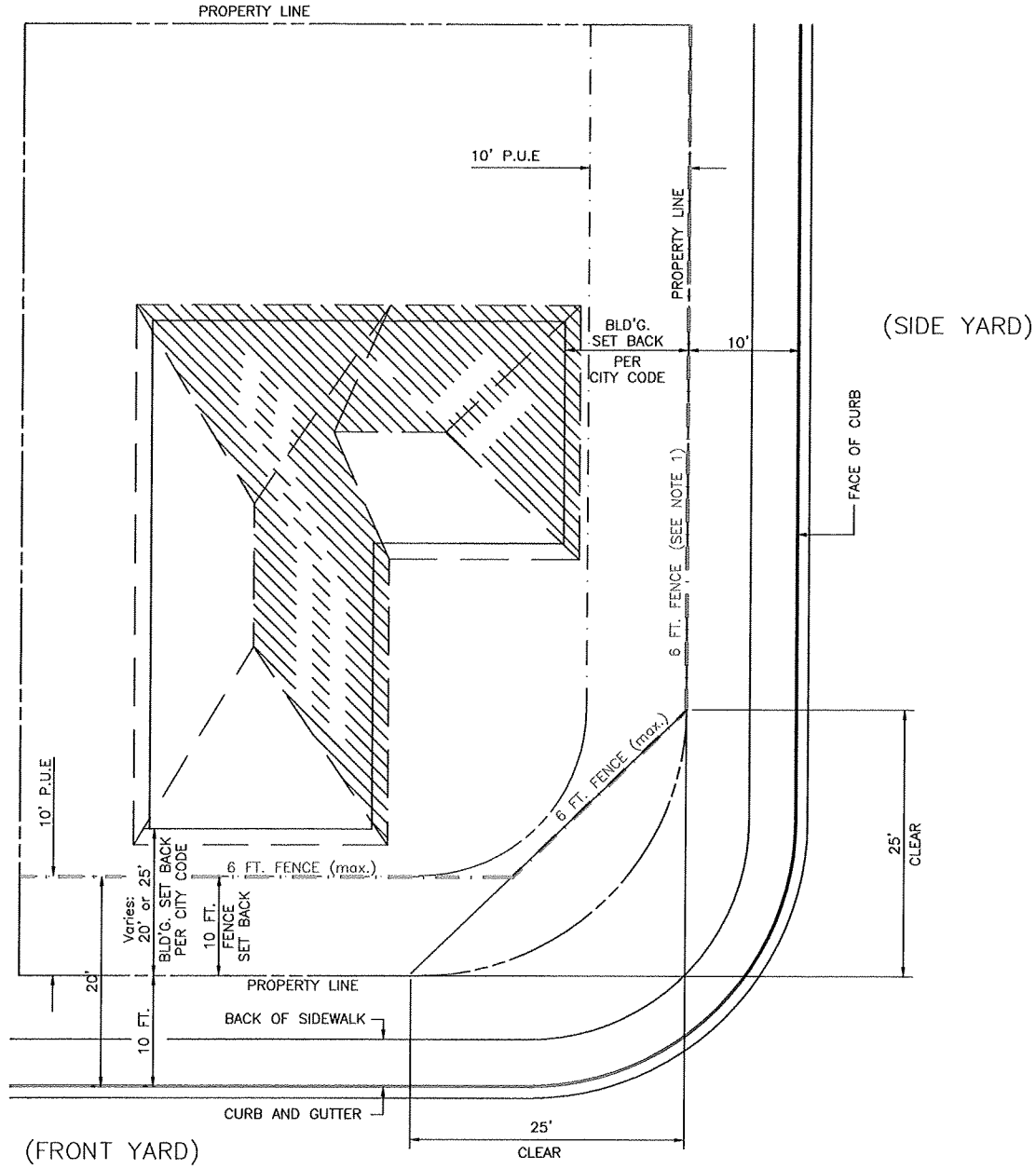

NOTES:

PLAN

1. A SEVEN FOOT (7') HIGH FENCE MAY BE CONSTRUCTED WITH THE ISSUANCE OF A BUILDING PERMIT FROM THE BUILDING DEPARTMENT.
2. THE FRONT OF THE LOT SHALL BE AS DEFINED BY THE CITY CODE 8-23-3. IN THE CASE OF A CORNER LOT, THE LINE SEPARATING THE NARROWEST STREET FRONTAGE OF THE LOT FROM THE STREET.
3. P.U.E. = PUBLIC UTILITY EASEMENT
4. FENCES, WALLS AND HEDGES SHALL BE PERMITTED AS FOLLOWS:

a). ALONG SIDE & REAR PROPERTY LINES & ALONG ANY PORTION OF THE STREET SIDE YARD OF A CORNER LOT, NOT EXCEEDING SEVEN FEET (7') IN HEIGHT, EXCEPT AS LIMITED BY THE NOTE 4d). BELOW.

b). FENCES OR WALLS NOT EXCEEDING THREE FEET (3') IN HEIGHT MAY BE ERECTED WITHIN ANY PORTION OF THE REQUIRED FRONT YARD. A FENCE OR WALL NOT EXCEEDING SIX FEET (6') IN HEIGHT MAY BE ERECTED IN THE FRONT YARD, PROVIDED THAT IT IS SET BACK A MINIMUM OF TEN FEET (10') FROM THE FRONT PROPERTY LINE, PROVIDED THAT THE FENCE SHALL BE A MAXIMUM OF TWENTY FEET (20') FROM THE EXTERIOR LINE OF THE CURB.

c). OPEN FENCES NOT EXCEEDING SIX FEET (6') IN HEIGHT, AND HEDGES, MAY BE LOCATED WITHIN ANY REQUIRED YARD, OR ALONG ANY SIDE LOT LINE, EXCEPT AS LIMITED BY THE NOTE 4d). BELOW.

d). NO FENCE, WALL OR HEDGE EXCEEDING THREE FEET (3') IN HEIGHT MAY BE LOCATED WITHIN AN AREA OF A CORNER LOT ON THE STREET SIDE OF A DIAGONAL LINE CONNECTING POINTS LOCATED TWENTY FIVE FEET (25') ALONG THE PROPERTY LINE AS MEASURED FROM THE INTERSECTION OF THE PROPERTY LINES AT THE STREET CORNER.

REGISTERED PROFESSIONAL ENGINEER
BRUCE A. WEBBER
C043156
Exp. 3-31-2006
CIVIL
STATE OF CALIFORNIA

NOT TO SCALE

TYPICAL RESIDENTIAL LOT FENCE LOCATION & SETBACKS	CITY ENGINEER PUBLIC WORKS DEPARTMENT ENGINEERING DIVISION	12-5-05 PLAN APPROVAL DATE
	REVISIONS: NOV. 2005	CITY OF REEDLEY ST-20A

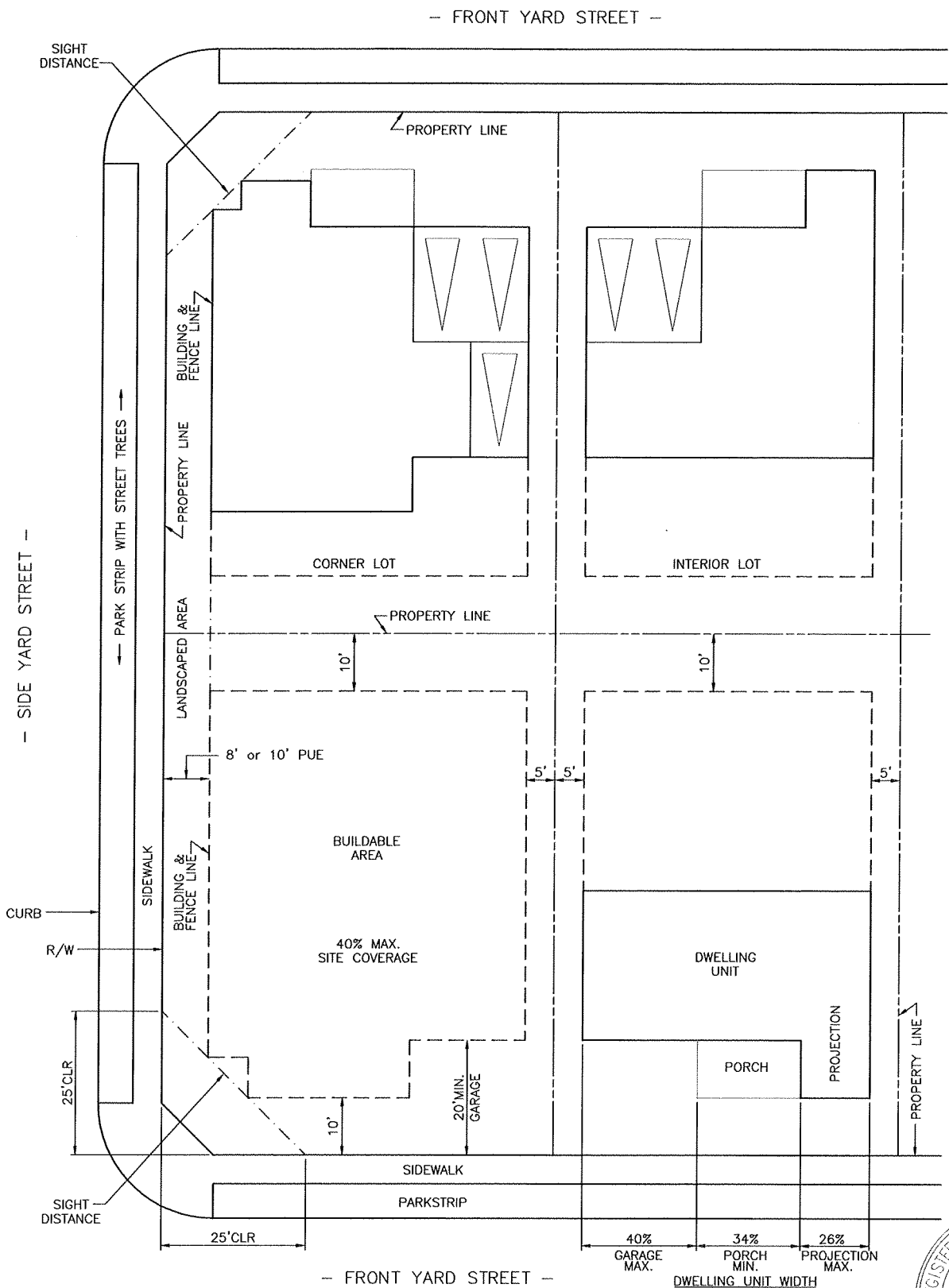

NOT TO SCALE

REGISTERED PROFESSIONAL ENGINEER
BRUCE A. WEBBER
C043156
Exp. 3-31-2006
CIVIL
STATE OF CALIFORNIA

SINGLE FAMILY RESIDENTIAL
TYPICAL RESIDENTIAL SETBACKS
WITHIN
REEDLEY SPECIFIC PLAN AREA

CITY ENGINEER
PUBLIC WORKS DEPARTMENT
ENGINEERING DIVISION

12-5-05
PLAN APPROVAL DATE

REVISIONS:
NOV. 2005

CITY OF REEDLEY

ST-20B

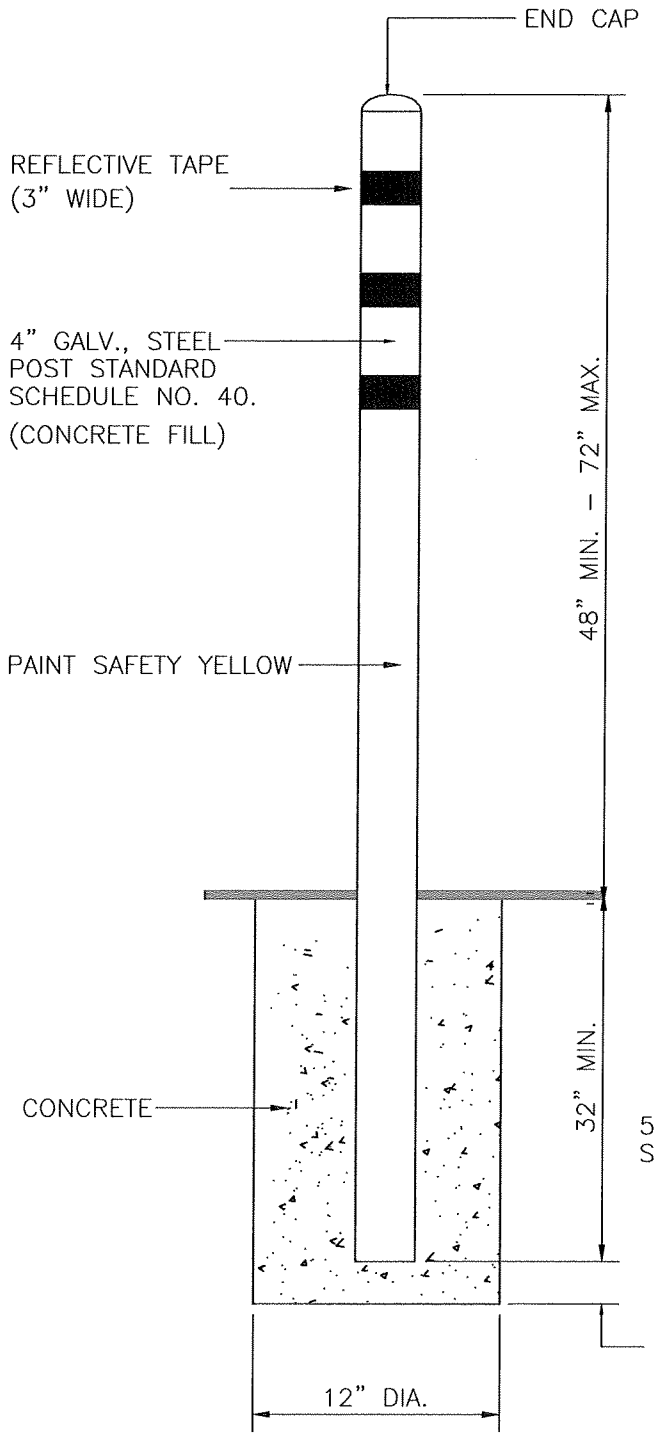

FIXED GUARD POST

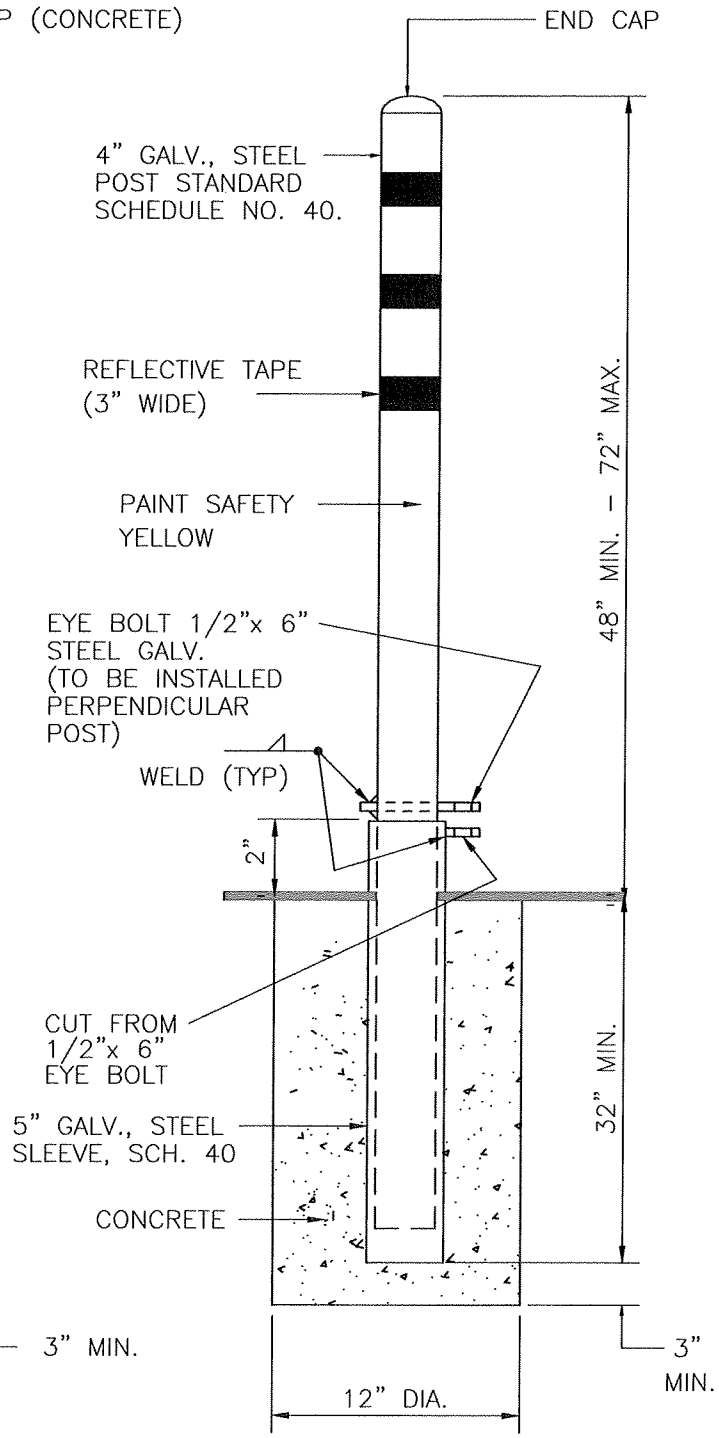

REMOVABLE GUARD POST

REGISTERED PROFESSIONAL ENGINEER
BRUCE A. WEBBER
C043156
Exp. 3-31-2006
CIVIL
STATE OF CALIFORNIA

NOT TO SCALE

STEEL GUARD POST DETAIL	CITY ENGINEER PUBLIC WORKS DEPARTMENT ENGINEERING DIVISION	12-5-05 PLAN APPROVAL DATE
	REVISIONS: NOV. 2005	CITY OF REEDLEY ST-21A

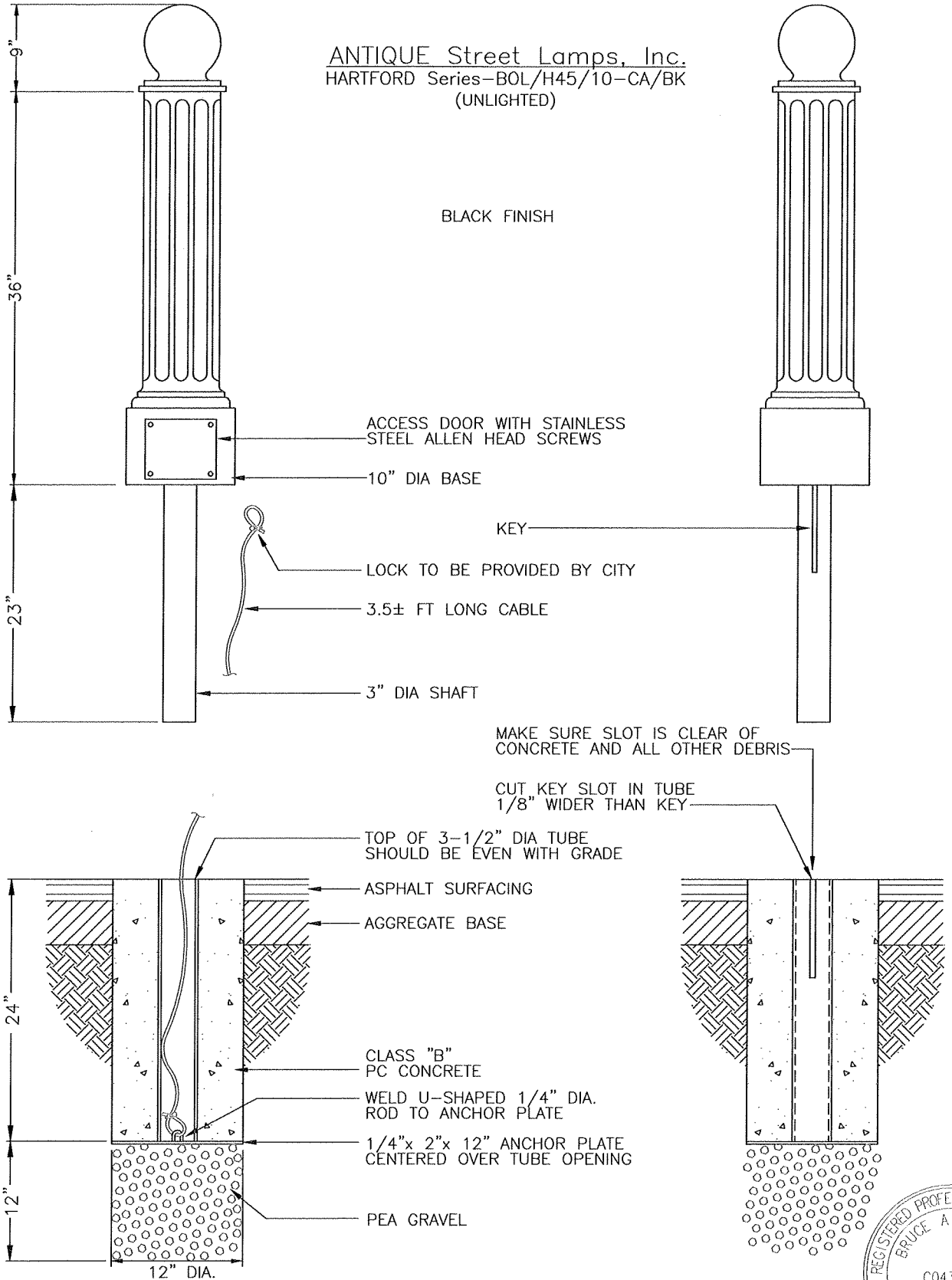

REGISTERED PROFESSIONAL ENGINEER
BRUCE A. WEBBER
C043156
Exp. 3-31-2006
CIVIL
STATE OF CALIFORNIA

NOT TO SCALE

QUICK RELEASE STEEL BOLLARD	CITY ENGINEER PUBLIC WORKS DEPARTMENT ENGINEERING DIVISION	12-5-05 PLAN APPROVAL DATE
	REVISIONS: NOV. 2005	CITY OF REEDLEY ST-21B

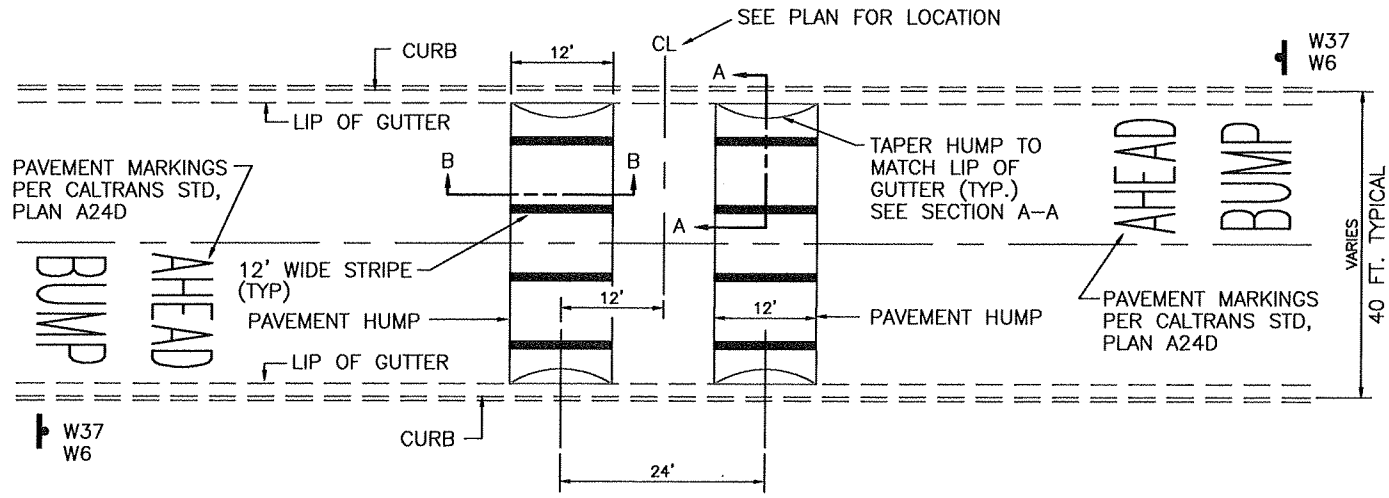

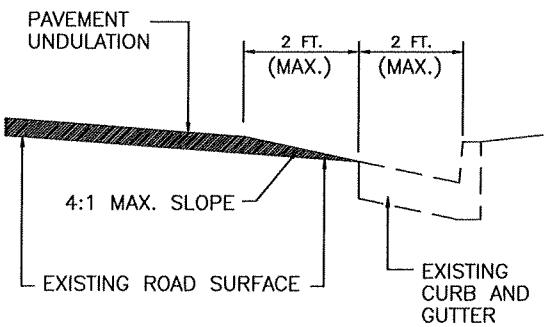

SECTION A–A

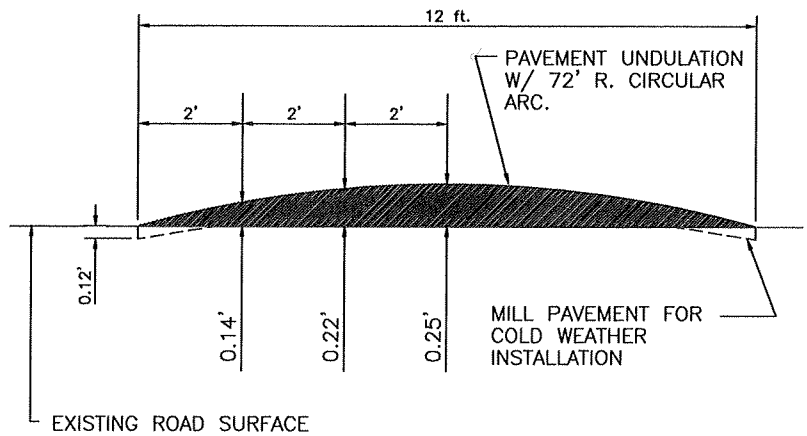

SECTION B–B

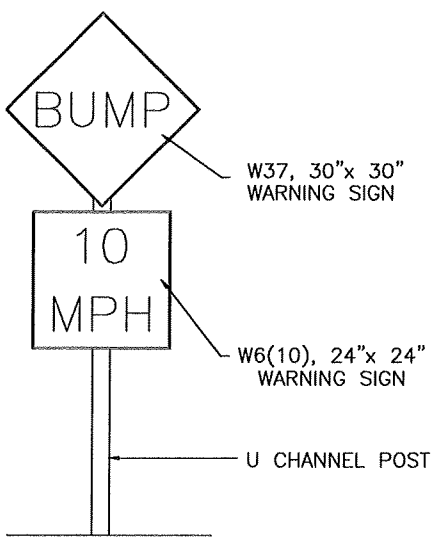

DETAIL–A

REFER TO STD. PLAN ST–10B

INSTALLATION DETAILS

1. TWO HUMPS 24 FT. APART CENTER TO CENTER SHALL BE CONSTRUCTED AT GIVEN LOCATIONS UNLESS OTHERWISE NOTED.
2. HUMPS SHALL NOT BE PLACED OVER EXISTING ROAD SERVICE COVERS, DRAIN INLETS, ETC.
3. WHENEVER POSSIBLE EDGE OF HUMPS SHALL BE 5 FT. MINIMUM FROM EDGE OF DRIVEWAY.
4. WHENEVER POSSIBLE HUMPS SHALL BE PLACED AT PROPERTY LINES.
5. WHENEVER POSSIBLE HUMPS SHALL BE PLACED ADJACENT TO STREET LIGHTS.
6. PARKING SHALL BE PROHIBITED AS DIRECTED BY THE CITY ENGINEER.
7. ALL STRIPING SHALL BE WHITE OR YELLOW AT LOCATIONS WITHIN 500 FT. OF A SCHOOL.

NOT TO SCALE

STANDARD SPEED HUMP	CITY ENGINEER PUBLIC WORKS DEPARTMENT ENGINEERING DIVISION	1-26-06 PLAN APPROVAL DATE
	REVISIONS: JAN. 2006	CITY OF REEDLEY ST–22

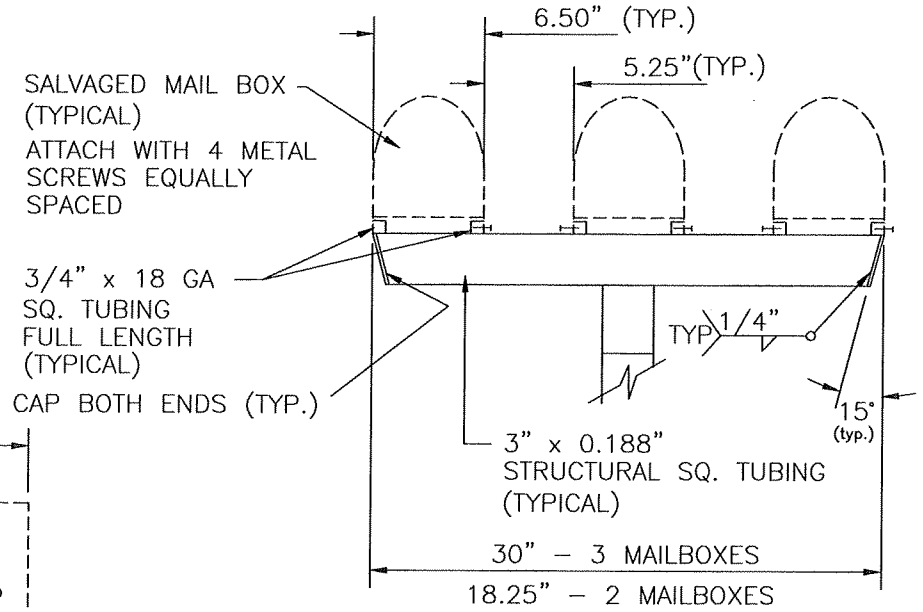

MAILBOX SUPPORT DETAIL

1" = 1'

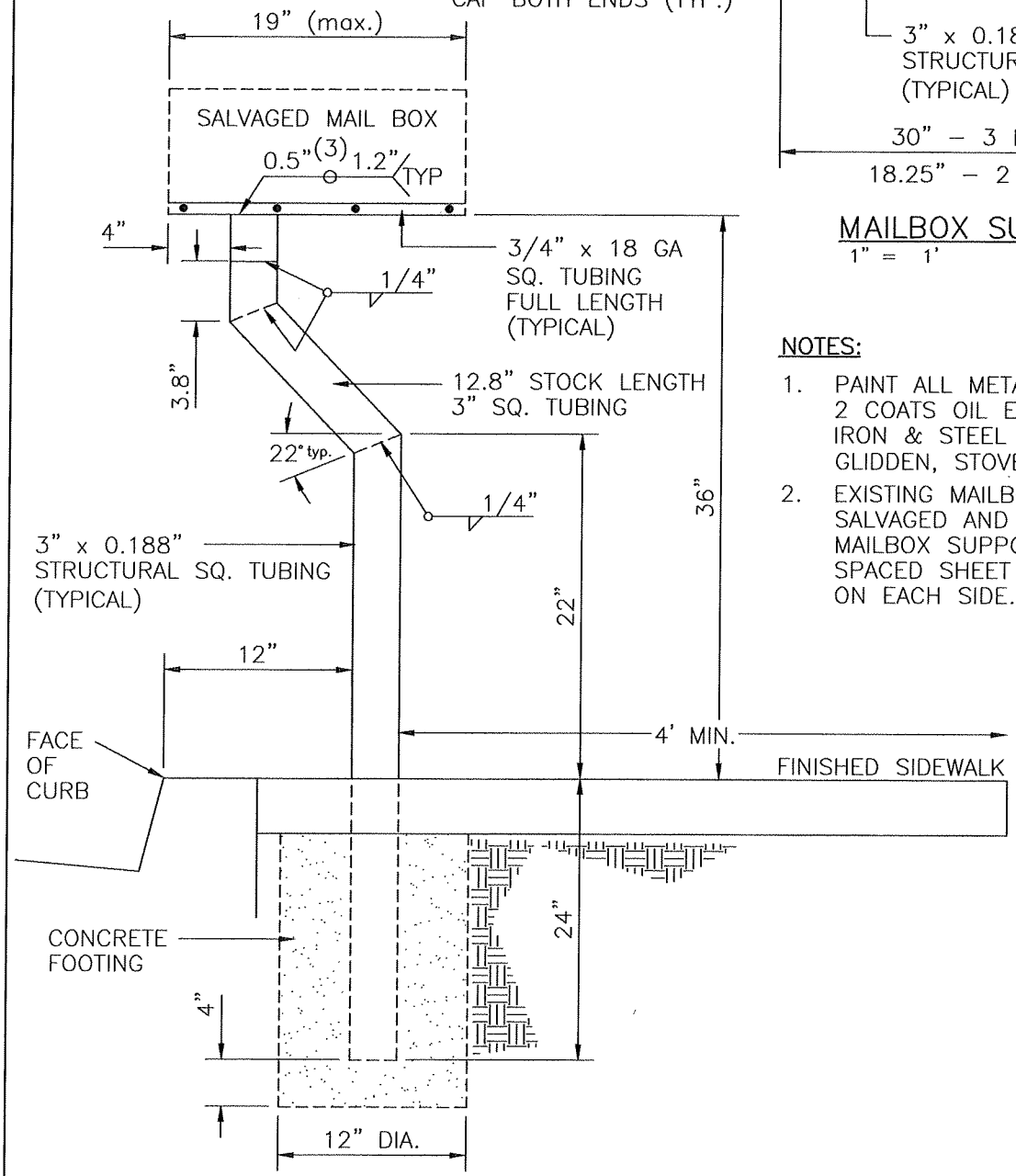

INSTALLATION DETAILS

1" = 1'

NOTES:

1. PAINT ALL METAL SURFACES WITH 2 COATS OIL ENAMEL OVER A IRON & STEEL OIL PRIMER BASE. GLIDDEN, STOVE BLACK OR EQUAL.
2. EXISTING MAILBOXES SHALL BE SALVAGED AND ATTACHED TO MAILBOX SUPPORT WITH 4 EQUAL SPACED SHEET METAL SCREWS ON EACH SIDE.

REGISTERED PROFESSIONAL ENGINEER
BRUCE A. WEBBER
C043156
Exp. 3-31-2006
CIVIL
STATE OF CALIFORNIA

STANDARD MAILBOX POST RELOCATION DETAIL	CITY ENGINEER PUBLIC WORKS DEPARTMENT ENGINEERING DIVISION	12-13-05 PLAN APPROVAL DATE
	REVISIONS: DEC. 2005	CITY OF REEDLEY ST–23

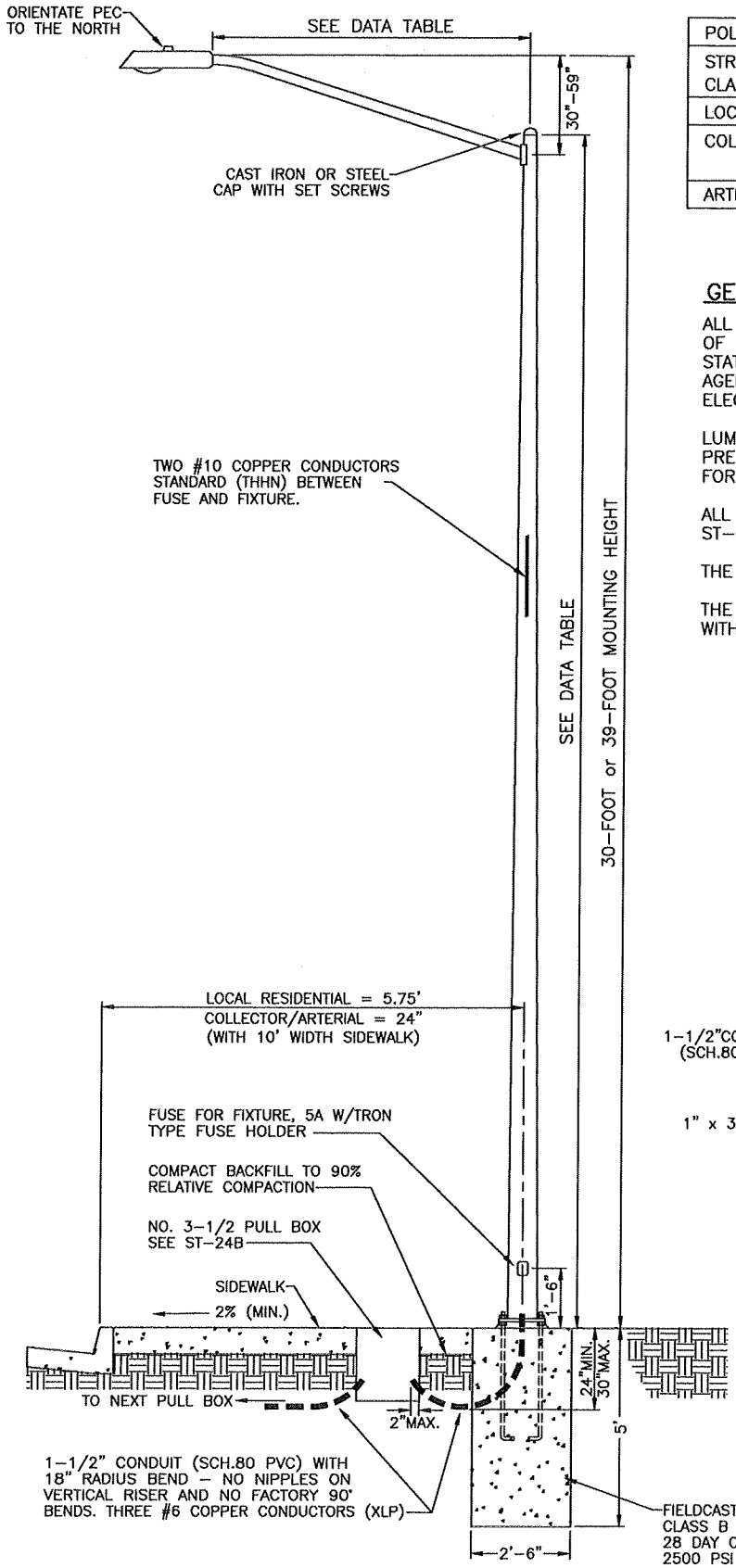

LIGHT STANDARD
TYPE 15

NOT TO SCALE

POLE AND LUMINAIRE ARM DATA			
STREET CLASSIFICATION	No. OF LANES	MAST ARM LENGTH	POLE HEIGHT
LOCAL	2	8–FOOT	28–FOOT
COLLECTOR	2	8–FOOT	28–FOOT
	4	12–FOOT	30–FOOT
ARTERIAL	4	12–FOOT	30–FOOT

GENERAL NOTES

ALL WORK SHALL CONFORM TO THE APPLICABLE SECTIONS OF THE SPECIFICATIONS ENTITLED STANDARD SPECIFICATIONS, STATE OF CALIFORNIA, BUSINESS AND TRANSPORTATION AGENCY, DEPARTMENT OF TRANSPORTATION AND NATIONAL ELECTRICAL CODE, AND THESE PROVISIONS.

LUMINAIRE WILL BE COBRA HEAD TYPE, 120V HIGH PRESSURE SODIUM–VAPOR. REFER TO ST–24C FOR PLACEMENT AND WATTAGE REQUIREMENTS.

ALL STREET LIGHTS SHALL BE NUMBERED. REFER TO ST–24D.

THE DEVELOPER SHALL APPLY FOR RULE 16 WITH PG&E.

THE CITY SHALL REQUEST STREET LIGHT ACTIVATION WITH PG&E PRIOR TO NOTICE OF COMPLETION.

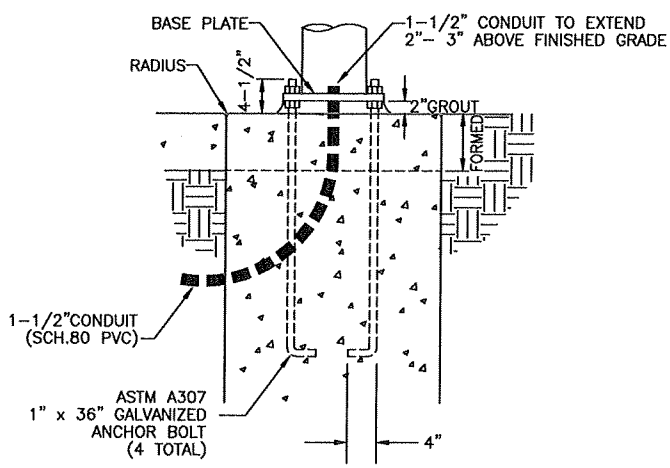

BASE DETAIL

REGISTERED PROFESSIONAL ENGINEER
BRUCE A. WEBBER
C043156
Exp. 3–31–2006
CIVIL
STATE OF CALIFORNIA

CITY ENGINEER
PUBLIC WORKS DEPARTMENT
ENGINEERING DIVISION

12-8-05
PLAN APPROVAL DATE

STREET LIGHT STANDARD

REVISIONS
DEC. 2005

CITY OF REEDLEY
ST–24A

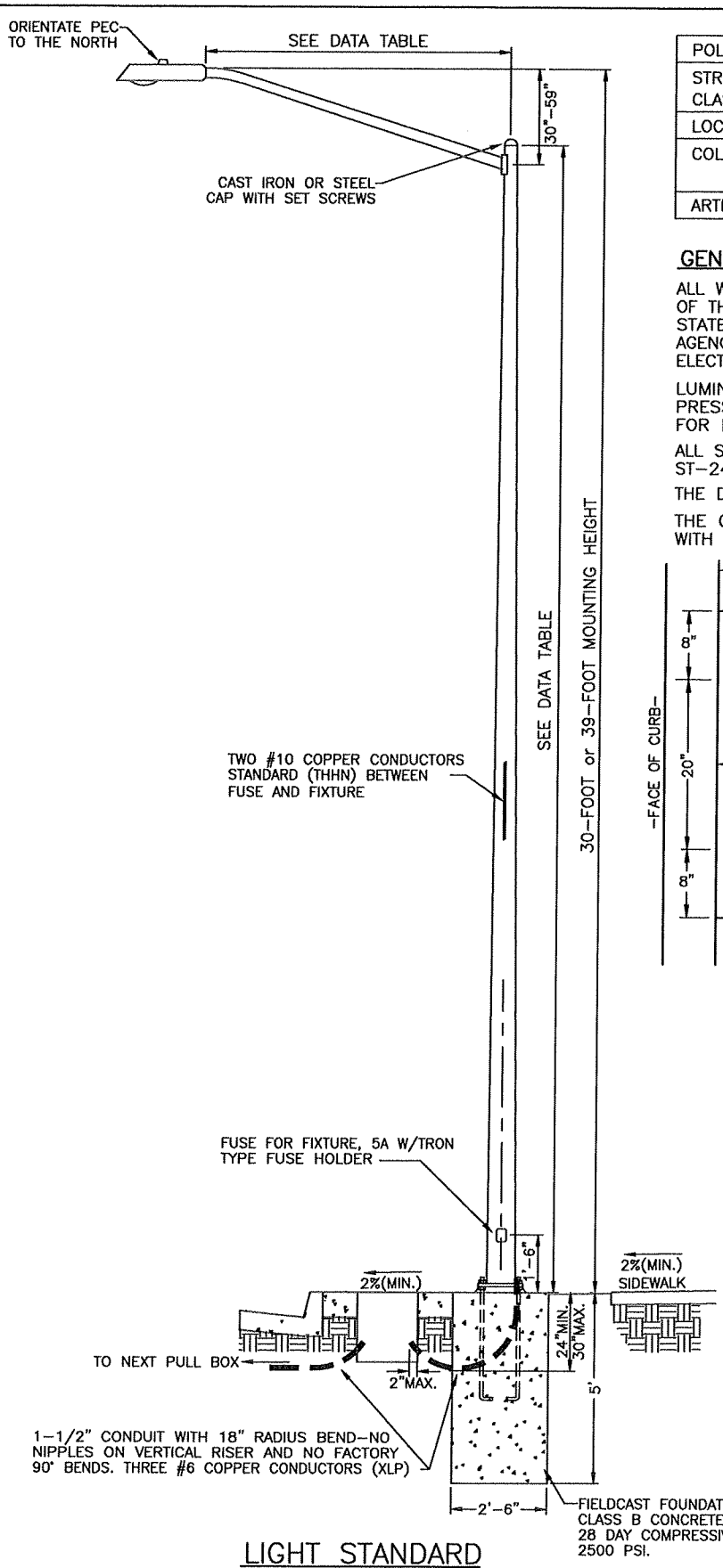

LIGHT STANDARD
TYPE 15

NOT TO SCALE

POLE AND LUMINAIRE ARM DATA			
STREET CLASSIFICATION	No. OF LANES	MAST ARM LENGTH	POLE HEIGHT
LOCAL	2	8–FOOT	28–FOOT
COLLECTOR	2	8–FOOT	28–FOOT
	4	12–FOOT	30–FOOT
ARTERIAL	4	12–FOOT	30–FOOT

GENERAL NOTES

ALL WORK SHALL CONFORM TO THE APPLICABLE SECTIONS OF THE SPECIFICATIONS ENTITLED STANDARD SPECIFICATIONS, STATE OF CALIFORNIA, BUSINESS AND TRANSPORTATION AGENCY, DEPARTMENT OF TRANSPORTATION AND NATIONAL ELECTRICAL CODE, AND THESE PROVISIONS.

LUMINAIRE WILL BE COBRA HEAD TYPE, 120V HIGH PRESSURE SODIUM–VAPOR. REFER TO ST–24C FOR PLACEMENT AND WATTAGE REQUIREMENTS.

ALL STREET LIGHTS SHALL BE NUMBERED. REFER TO ST–24D.

THE DEVELOPER SHALL APPLY FOR RULE 16 WITH PG&E.

THE CITY SHALL REQUEST STREET LIGHT ACTIVATION WITH PG&E PRIOR TO NOTICE OF COMPLETION.

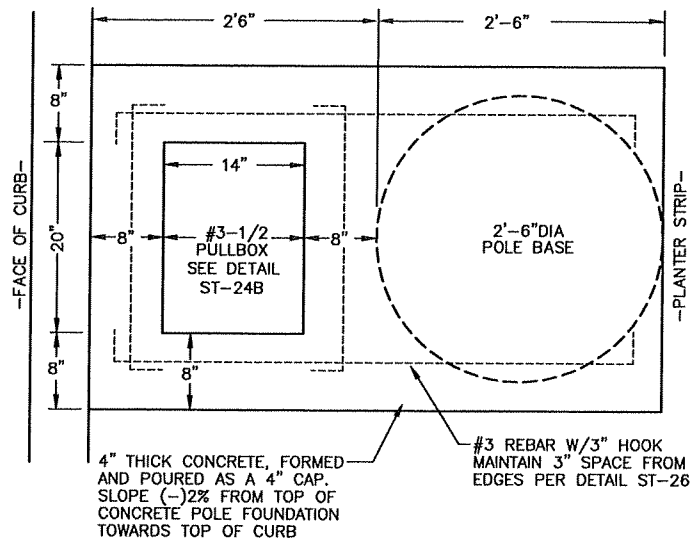

PLAN VIEW

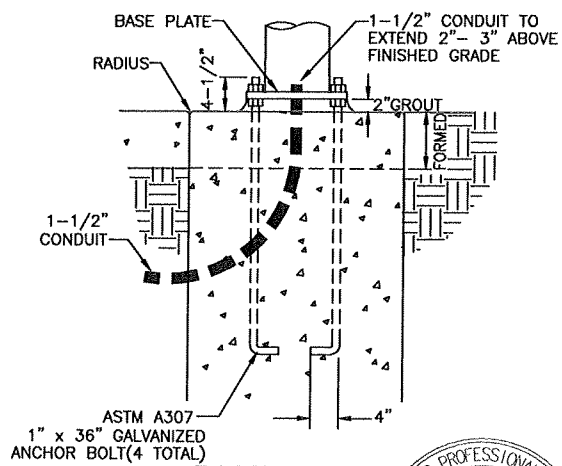

BASE DETAIL

REGISTERED PROFESSIONAL ENGINEER BRUCE A. WEBBER C043156 Exp. 3–31–2006 CIVIL STATE OF CALIFORNIA

STREET LIGHT STANDARD
(Located Within Planter Strip)

CITY ENGINEER
PUBLIC WORKS DEPARTMENT
ENGINEERING DIVISION

12-15-05
PLAN APPROVAL DATE

REVISIONS
DEC. 2005

CITY OF REEDLEY
ST–24A.1

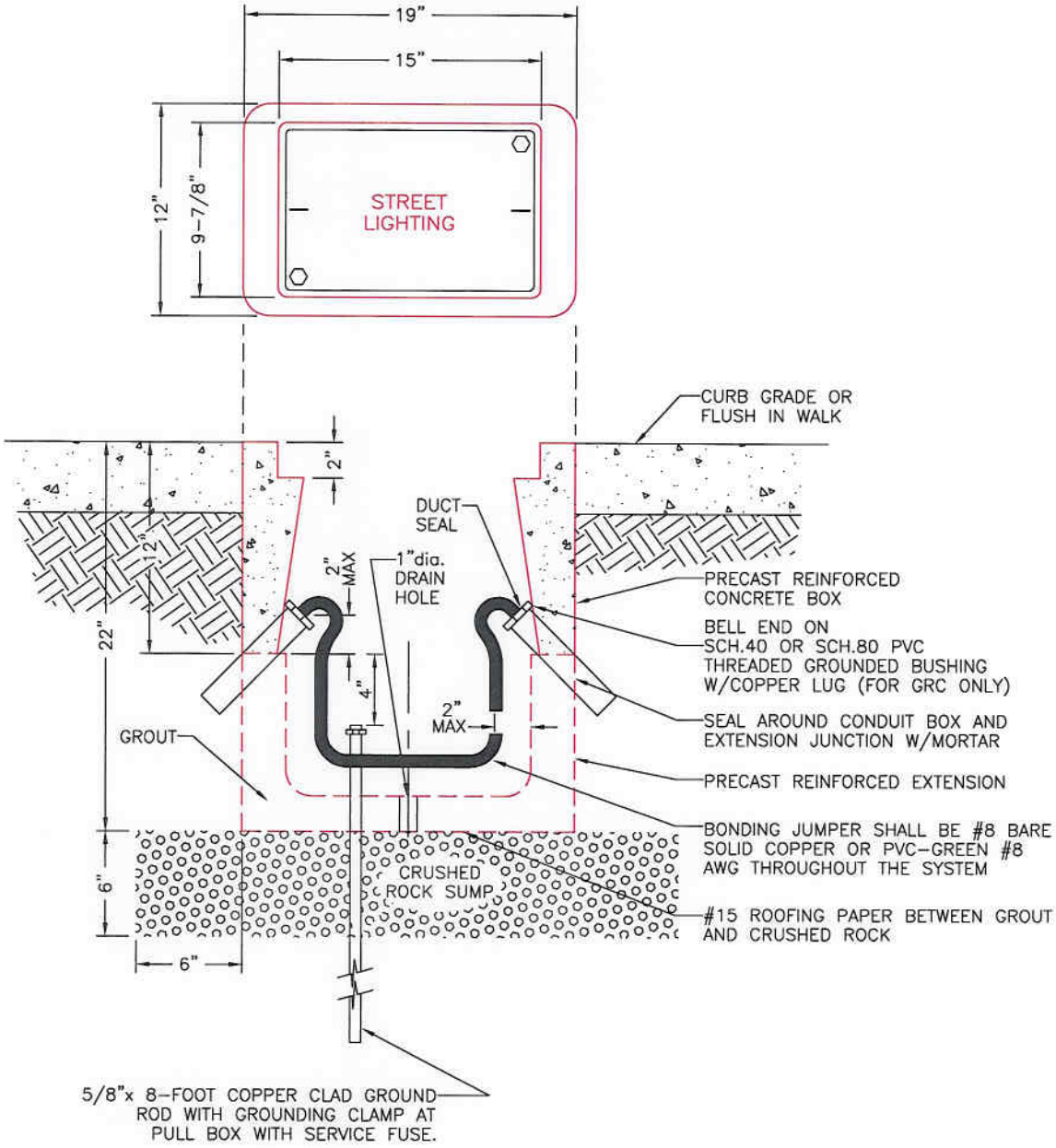

GENERAL NOTES

1. PULL BOXES SHALL BE NO. 3-1/2 AS PER CAL TRANS STANDARD SPECIFICATIONS OR CHRISTY N-9 OR APPROVED EQUAL.
2. PULL BOXES SHALL BE GROUTED PRIOR TO INSTALLATION OF CONDUCTORS SLOPED TOWARD THE DRAIN HOLE. PLACE A LAYER OF ROOFING PAPER BETWEEN THE CRUSHED ROCK AND THE GROUT.
3. PULL LIDS BEFORE POURING CONCRETE AROUND PULL BOXES.
4. WRAP PULL BOX WITH ROOFING PAPER BEFORE BACKFILLING.
5. FUSE AT POINT OF SERVICE SHALL BE 60A IF #6 CONDUCTOR AND 40A IF #8 CONDUCTOR AND SHALL HAVE A TRON TYPE FUSE HOLDER (SINGLE POLE).
6. INSTALL A ONE-FOOT RING OF CONCRETE, FOUR INCHES DEEP, AROUND THE WRAPPED PULL BOX INSTALLED IN DIRT AREA, SLOPED TO DRAIN AWAY FROM THE PULL BOX.
7. ALL LIDS ON ALL UTILITY BOXES SHALL HAVE LOCKING BOLTS.

NOT TO SCALE

STREET LIGHT STANDARD PULL BOX	CITY ENGINEER PUBLIC WORKS DEPARTMENT ENGINEERING DIVISION 1-2-08 PLAN APPROVAL DATE	
	REVISIONS JUNE 2, 2003 JAN. 2008	CITY OF REEDLEY ST-24B

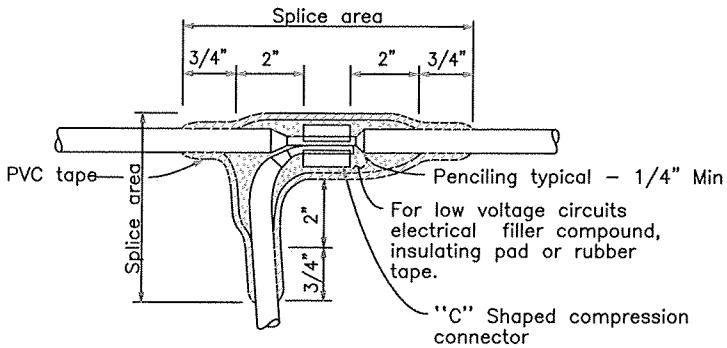

TYPE "C" SPLICE

Between 1 free–end and 1 through conductor

NOTES

All dimensions are minimum.
Rubber tapes shall be rolled after application.

INSULATION METHODS

Low Voltage Circuits (0–600 V)

METHOD "A" (Used only when specified)

Completely cover the splice area with electrical insulating coating and allow to dry.
Apply electrical filler compound with minimum thickness of 0.15'.
Apply 3 layers half lapped polyvinyl chloride tape.
Cover entire splice with electrical insulating coating and allow to dry.

OR

METHOD "B"

1. Completely cover the splice area with electrical insulating coating and allow to dry.
2. Apply 2 layers of electrical insulating pad with minimum thickness of 0.15' each layer or 2 layers, half lapped, synthetic oil resistant, self fusing rubber tape.
3. Apply 3 layers half lapped polyvinyl chloride tape.
4. Cover entire splice with electrical insulating coating and allow to dry.

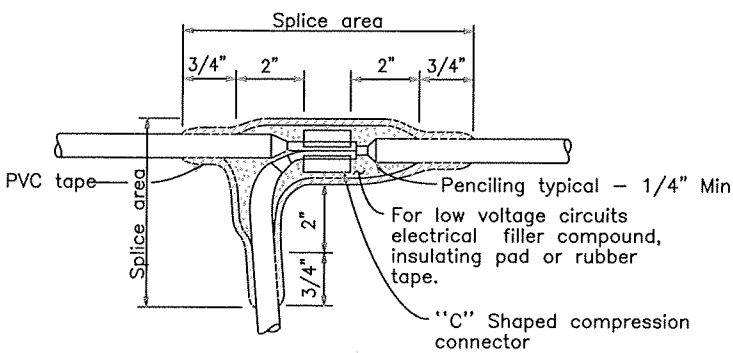

TYPE "T" SPLICE

For 3 free–ends

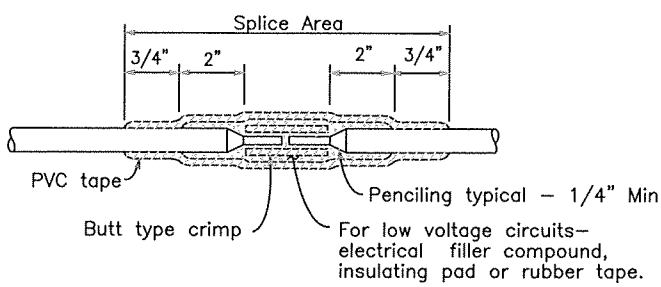

TYPE "S" SPLICE

Between 2 free–ends

NOT TO SCALE

STREET LIGHT AND ELECTRICAL SYSTEMS SPLICING DETAILS

Andrew J Benetti
CITY ENGINEER
PUBLIC WORKS DEPARTMENT
ENGINEERING DIVISION

June 17, 03
PLAN APPROVAL DATE

REVISIONS
JUNE 16, 2003

CITY OF REEDLEY

ST–24B.1

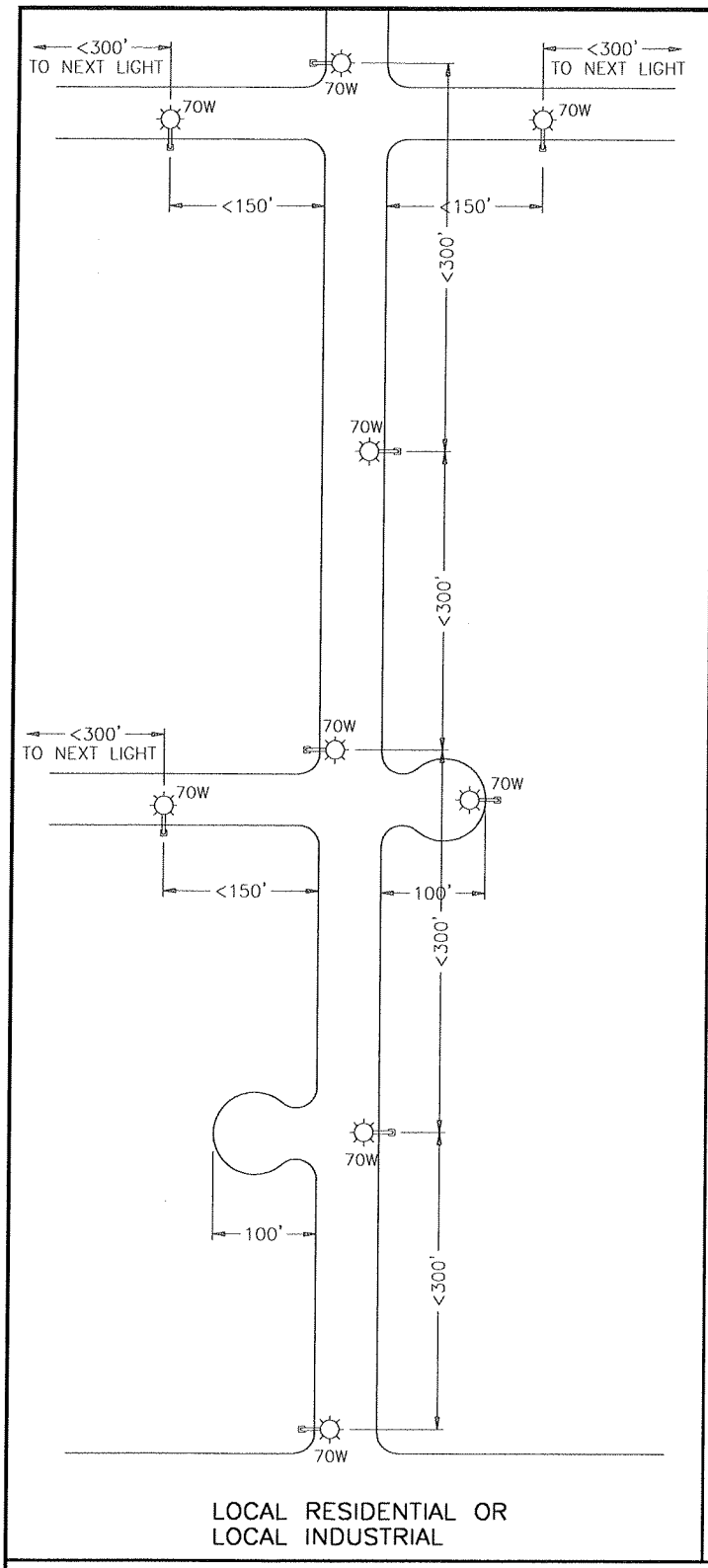

LOCAL RESIDENTIAL OR
LOCAL INDUSTRIAL

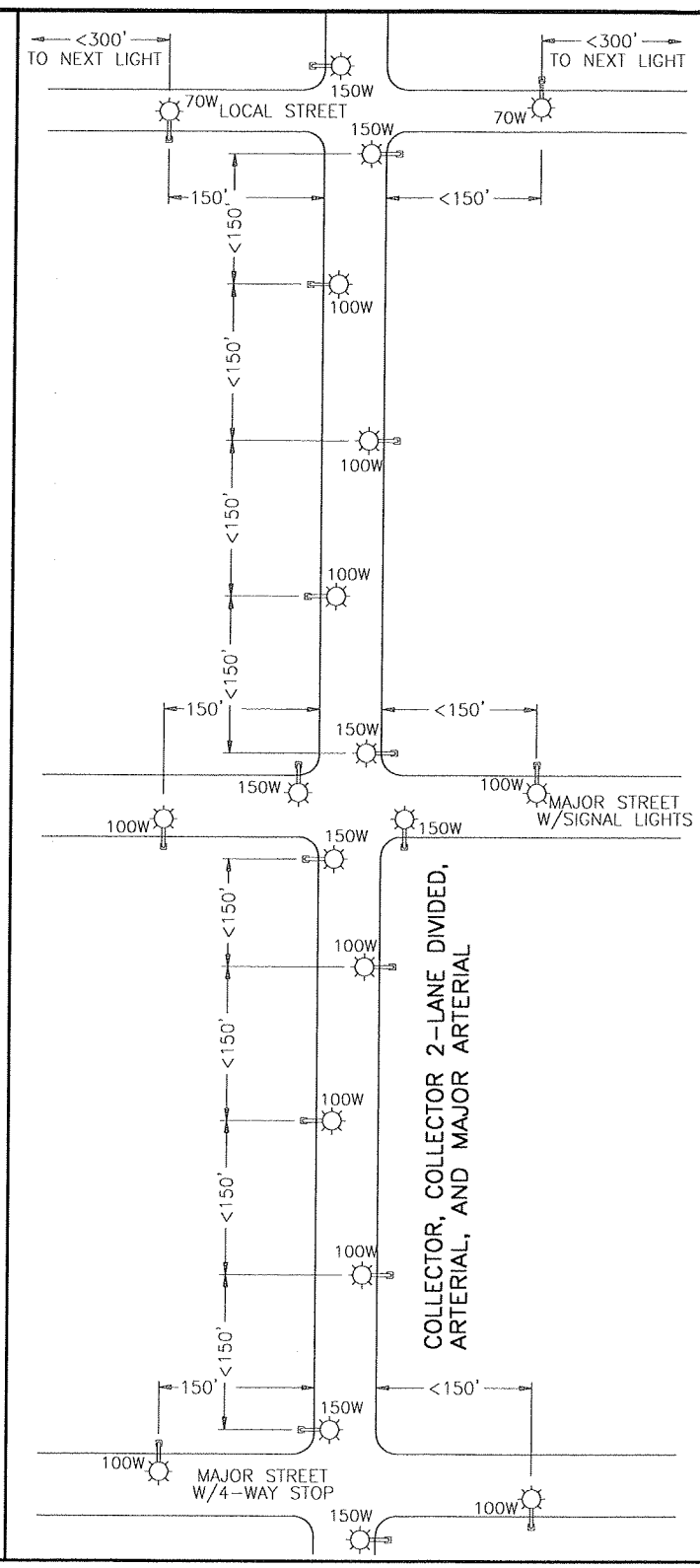

NOT TO SCALE

PLACEMENT REQUIREMENTS

STREET CLASSIFICATION	MAXIMUM DISTANCE BETWEEN LIGHTS
LOCAL RESIDENTIAL LOCAL INDUSTRIAL	300' EITHER SIDE OF STREET 70 WATT LIGHTS
COLLECTOR COLLECTOR 2-LANE DIVIDED ARTERIAL MAJOR ARTERIAL	300' ON BOTH SIDES OF STREET, STAGGERED AT 150' 150 WATT LIGHTS AT INTERSECTIONS 100 WATT LIGHTS MID BLOCK

STREET LIGHT PLACEMENT

Andrew J Benelli
CITY ENGINEER
COMMUNITY DEVELOPMENT DEPARTMENT
ENGINEERING DIVISION

May 15, 2000
PLAN APPROVAL DATE

REVISIONS
DEC. 1999

CITY OF REEDLEY
ST-24C

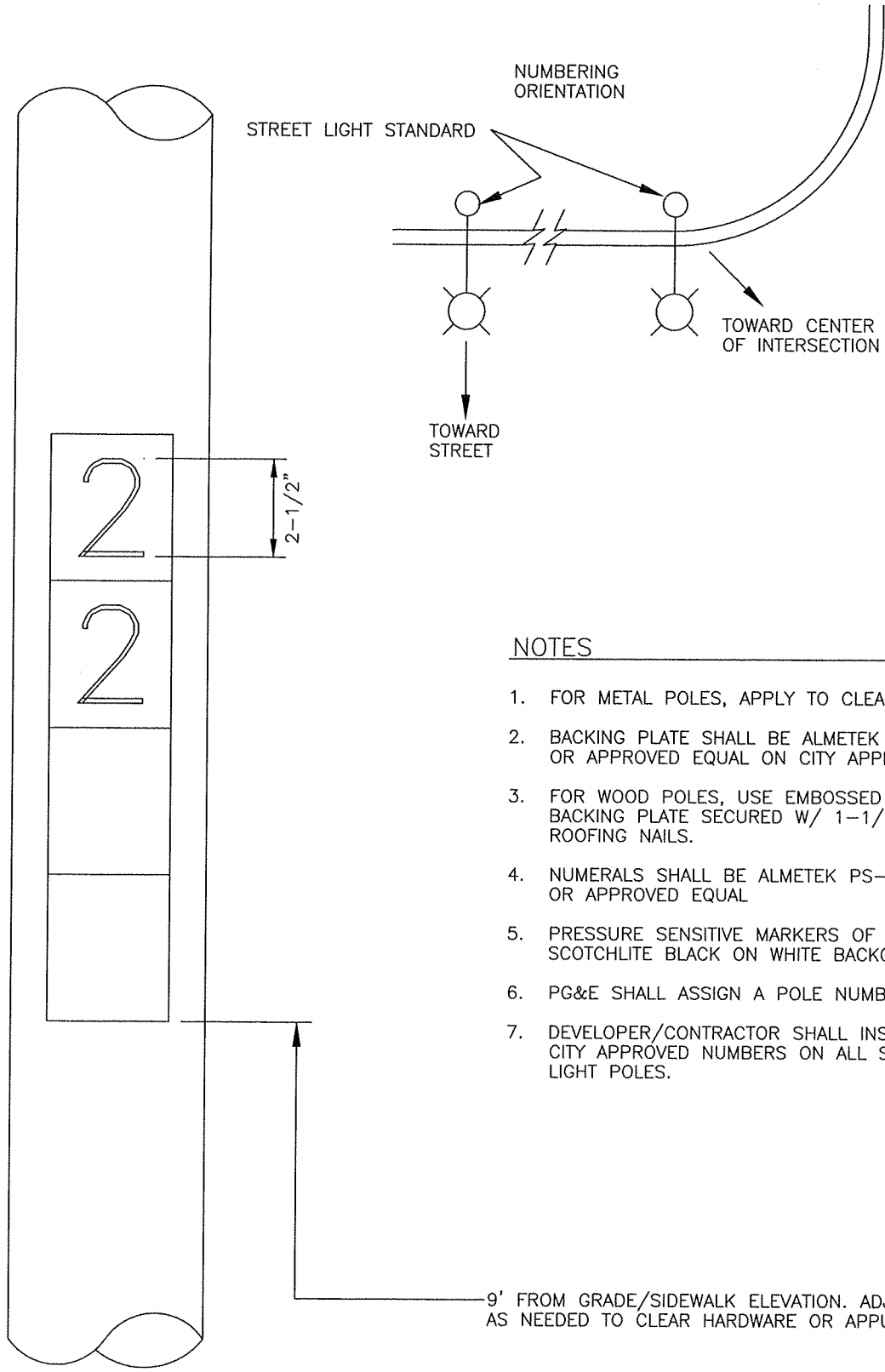

NOTES

1. FOR METAL POLES, APPLY TO CLEAN SURFACE.
2. BACKING PLATE SHALL BE ALMETEK EMP-2.5V5 OR APPROVED EQUAL ON CITY APPROVED POLES.
3. FOR WOOD POLES, USE EMBOSSED ALUMINUM BACKING PLATE SECURED W/ 1-1/2" ALUMINUM ROOFING NAILS.
4. NUMERALS SHALL BE ALMETEK PS-2.5 SERIES OR APPROVED EQUAL
5. PRESSURE SENSITIVE MARKERS OF REFLECTIVE SCOTCHLITE BLACK ON WHITE BACKGROUND.
6. PG&E SHALL ASSIGN A POLE NUMBER.
7. DEVELOPER/CONTRACTOR SHALL INSTALL CITY CITY APPROVED NUMBERS ON ALL STREET LIGHT POLES.

NOT TO SCALE

STREET LIGHT POLE NUMBERING	Andrew J Benetti CITY ENGINEER PUBLIC WORKS DEPARTMENT ENGINEERING DIVISION	May 2, 2003 PLAN APPROVAL DATE
	REVISIONS FEB 2002 APRIL 2003	CITY OF REEDLEY ST-24D

N:\AutoCad Drawing Files\Standard Plans\ST-24E.dwg

HISTORIC LIGHT STANDARD

WITHIN REEDLEY SPECIFIC PLAN AREA

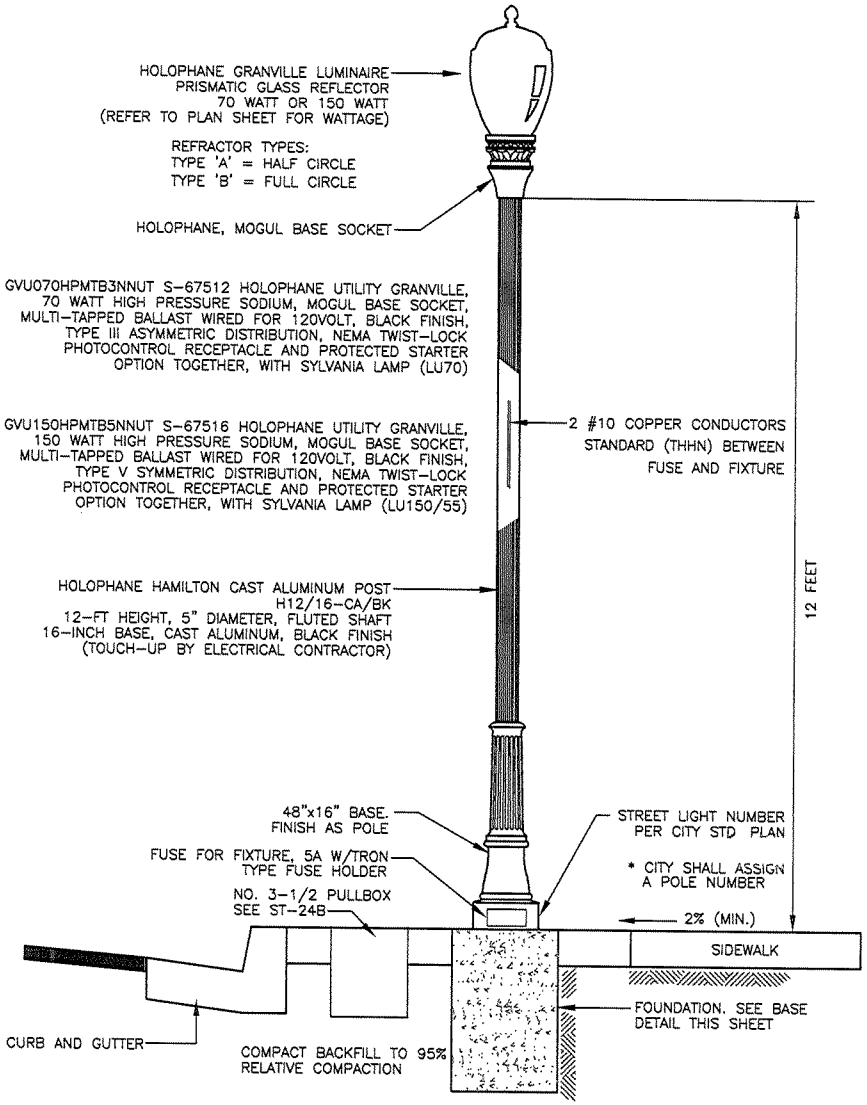

HOLOPHANE UTILITY GRANVILLE HISTORIC LIGHT DETAIL

NTS

GENERAL NOTES

THE DEVELOPER SHALL APPLY FOR RULE 16 WITH PG&E.

ORIENTATE PHOTO ELECTRIC CELL (PEC) TO THE NORTH.

THE CITY SHALL REQUEST STREET LIGHT ACTIVATION WITH PG&E PRIOR TO NOTICE OF COMPLETION.

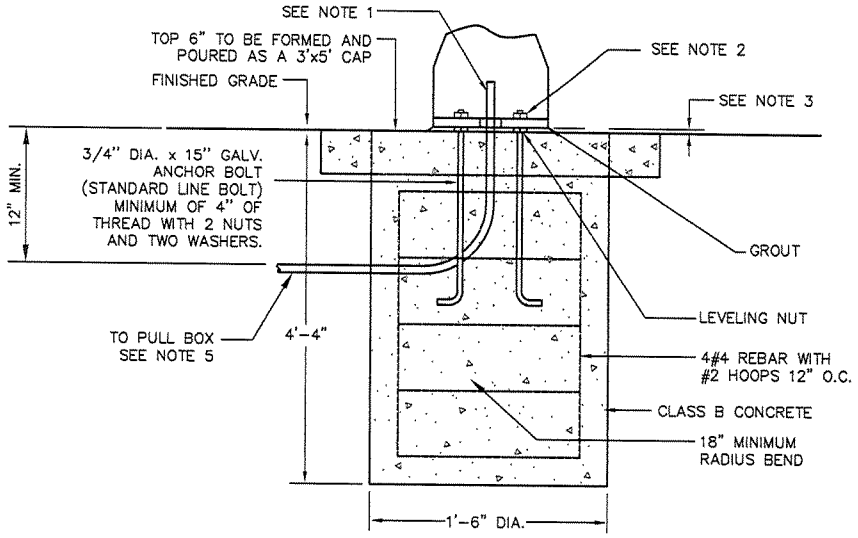

BASE DETAIL

NTS

1. CONDUITS SHALL EXTEND 2" MAXIMUM ABOVE BASE PLATE.
2. THREADED PORTION OF ANCHOR BOLTS NOT TO EXTEND MORE THAN 1" ABOVE TOP OF HOLD DOWN NUT.
3. 2" (MAX.) FROM BOTTOM OF STEEL BASE PLATE TO FINISHED SURFACE.
4. #4 REBAR CAGE PER DETAIL NOTE ABOVE
5. 1-1/2" CONDUIT WITH 18" RADIUS BEND-NO NIPPLES ON VERTICAL RISER AND NO FACTORY 90° BENDS. THREE #6 COPPER CONDUCTORS (XLP)

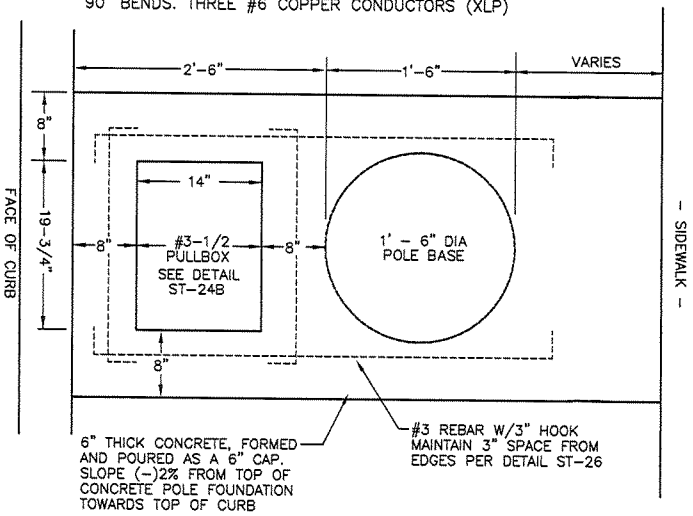

STREET LIGHT AND PULL BOX LOCATION DETAIL PLAN VIEW

NTS

REGISTERED PROFESSIONAL ENGINEER BRUCE A. WEBBER C043156 Exp. 3-31-2008 CIVIL STATE OF CALIFORNIA

CITY ENGINEER
PUBLIC WORKS DEPARTMENT
ENGINEERING DIVISION

1-29-07
PLAN APPROVAL DATE

REVISIONS
JAN. 2007

CITY OF REEDLEY

ST-24E

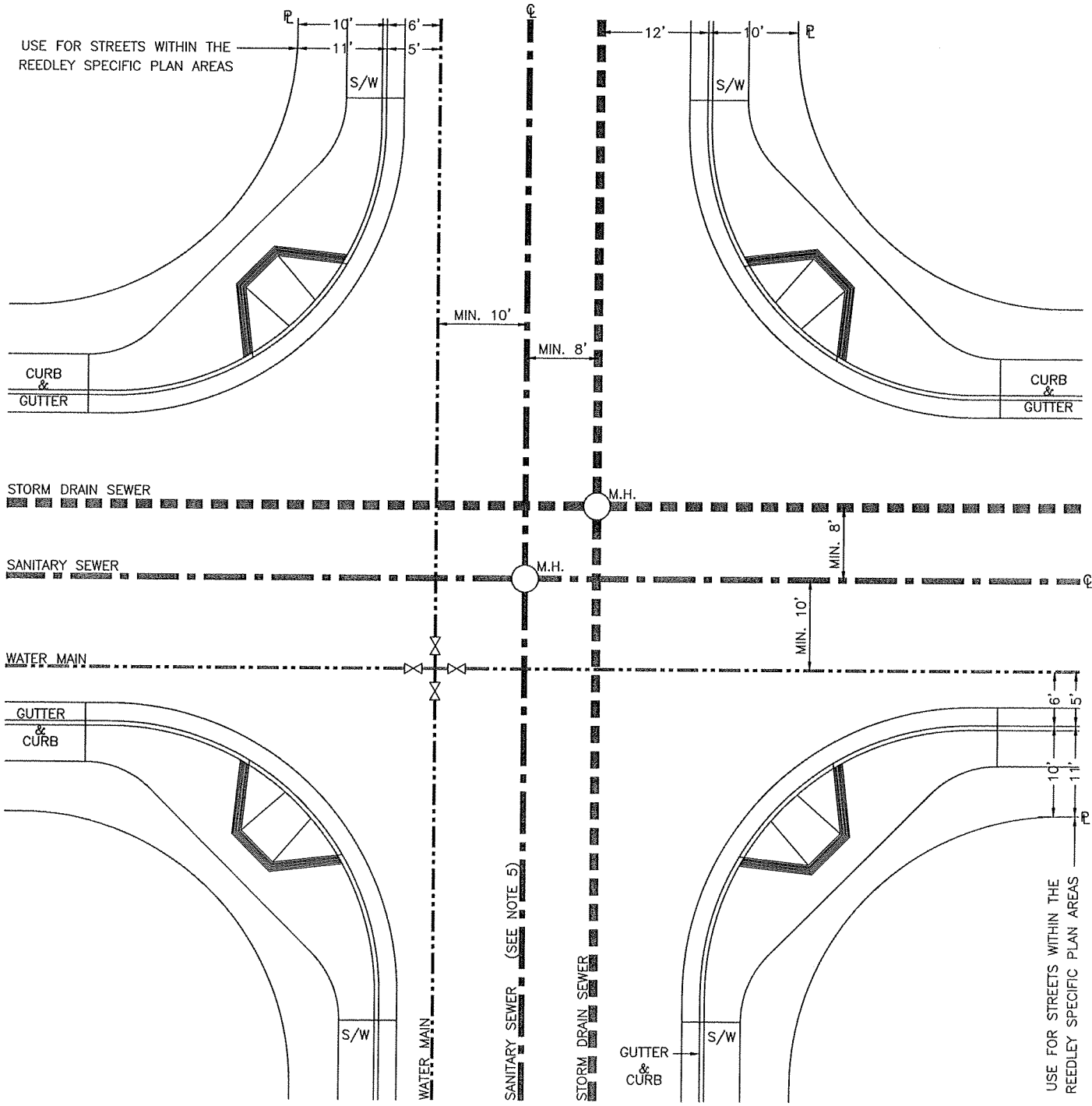

NOTE!

1. THIS "STANDARD" IS A GUIDE ONLY AND DEVIATIONS WILL BE ACCEPTABLE WHERE CONDITIONS DICTATE.
2. DIMENSIONS SHOWN ARE DESIRABLE BUT DO NOT GOVERN.
3. THE INTENTION IS TO SHOW THE RELATIVE POSITION OF ALL UTILITIES.
4. ANY CHANGES OR DEVIATION MUST BE APPROVED BY THE CITY ENGINEER.
5. IN STREETS WITH A MEDIAN ISLAND THE SEWER MAIN SHALL BE LOCATED 5 FEET FROM THE MEDIAN ISLAND CURB FACE ON THE OPPOSITE SIDE OF THE STORM DRAIN PIPELINE.

NORTH
NOT TO SCALE

UNDERGROUND UTILITIES LOCATIONS	Andrew J. Benelli CITY ENGINEER PUBLIC WORKS DEPARTMENT ENGINEERING DIVISION	July 12, 04 PLAN APPROVAL DATE
	REVISIONS FEB. 1999 JULY 2004	CITY OF REEDLEY ST-25

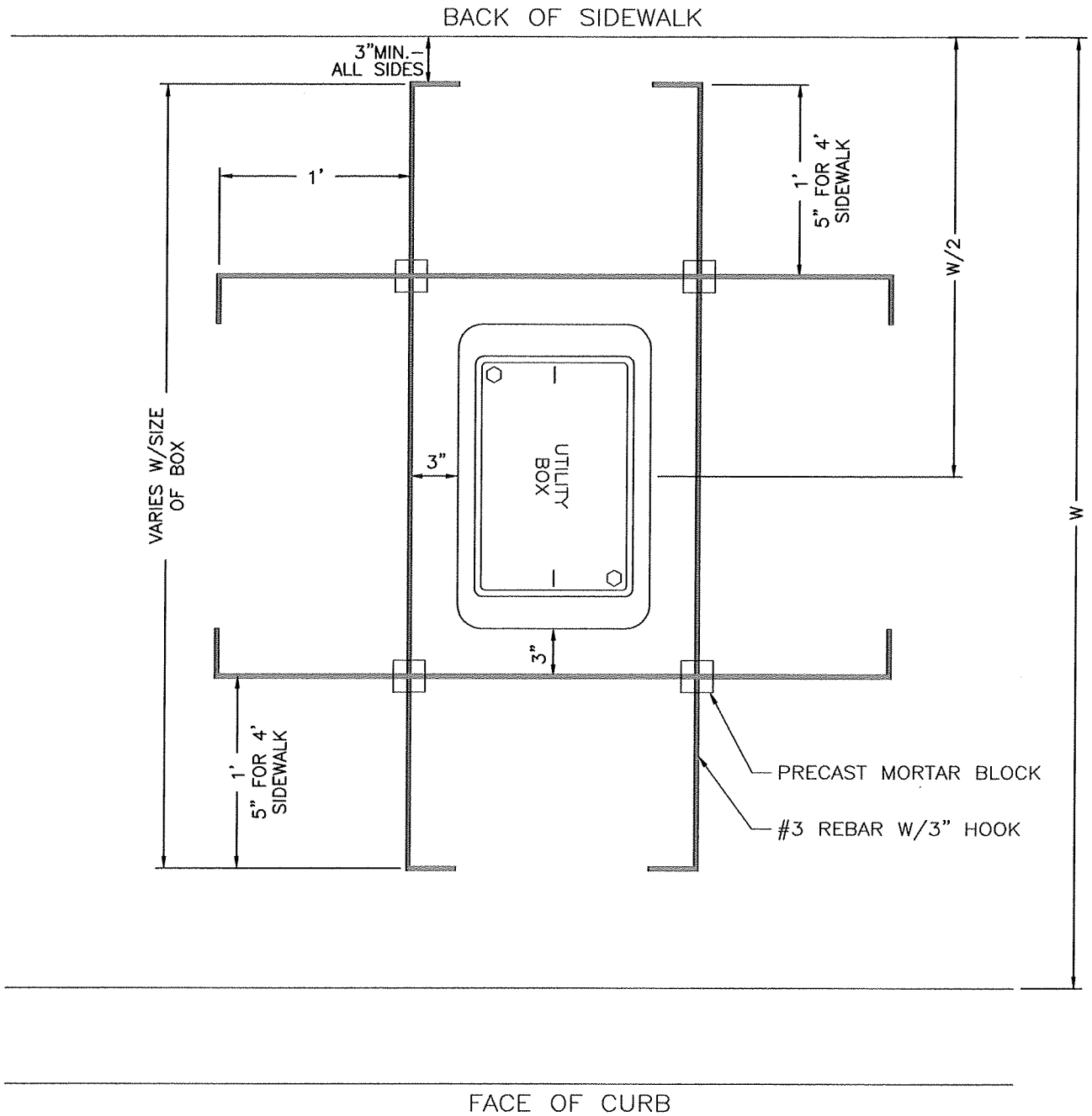

REGISTERED PROFESSIONAL ENGINEER
BRUCE A. WEBBER
C043156
Exp. 3-31-2006
CIVIL
STATE OF CALIFORNIA

NOT TO SCALE

UTILITY BOX REINFORCEMENT DETAIL	CITY ENGINEER PUBLIC WORKS DEPARTMENT ENGINEERING DIVISION	12-5-05 PLAN APPROVAL DATE
	REVISIONS NOV. 2005	CITY OF REEDLEY ST-26

NOTE:

1. THIS "STANDARD" IS A GUIDE ONLY AND DEVIATIONS WILL BE ACCEPTABLE WHERE CONDITIONS DICTATE.
2. DIMENSIONS SHOWN ARE DESIRABLE BUT DO NOT GOVERN.
3. ANY CHANGES OR DEVIATION MUST BE APPROVED BY THE CITY ENGINEER.

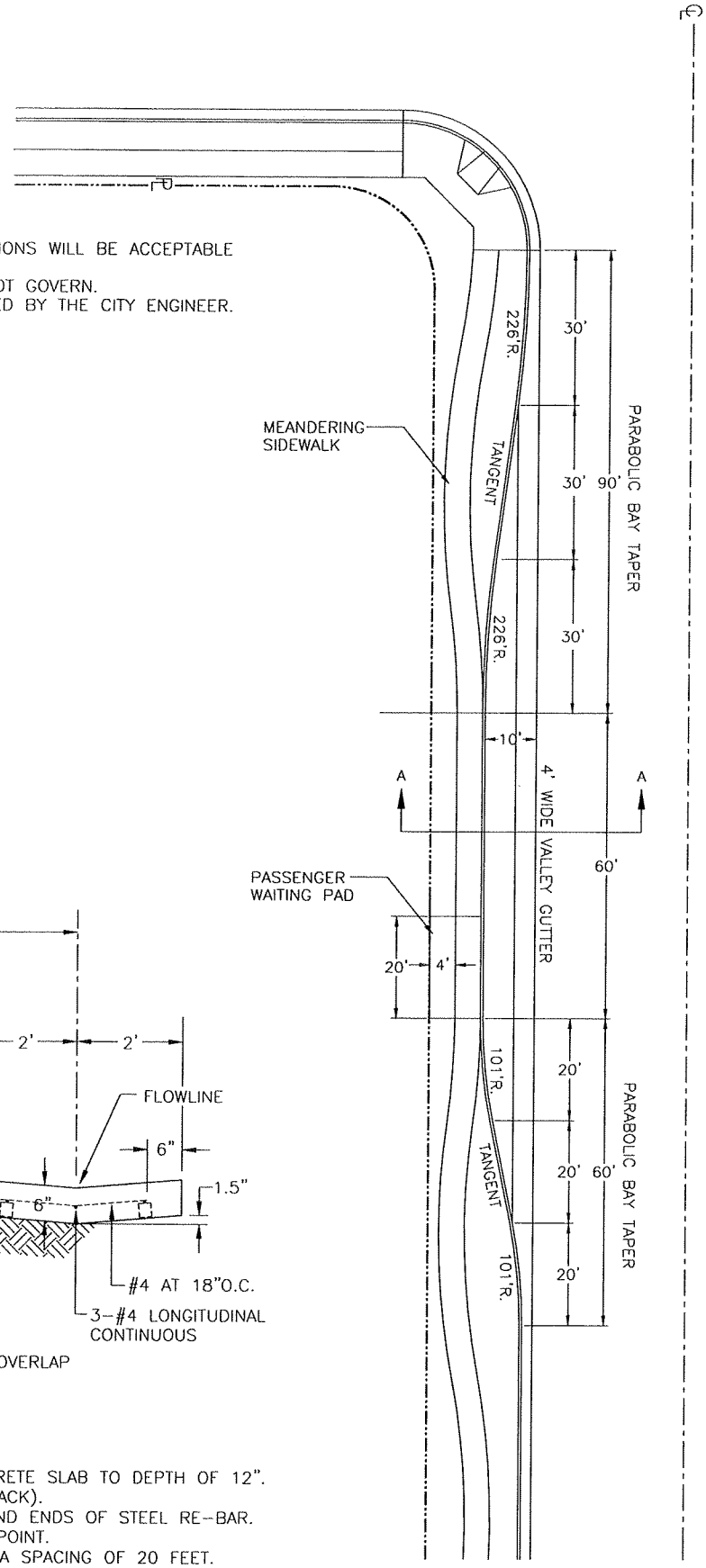

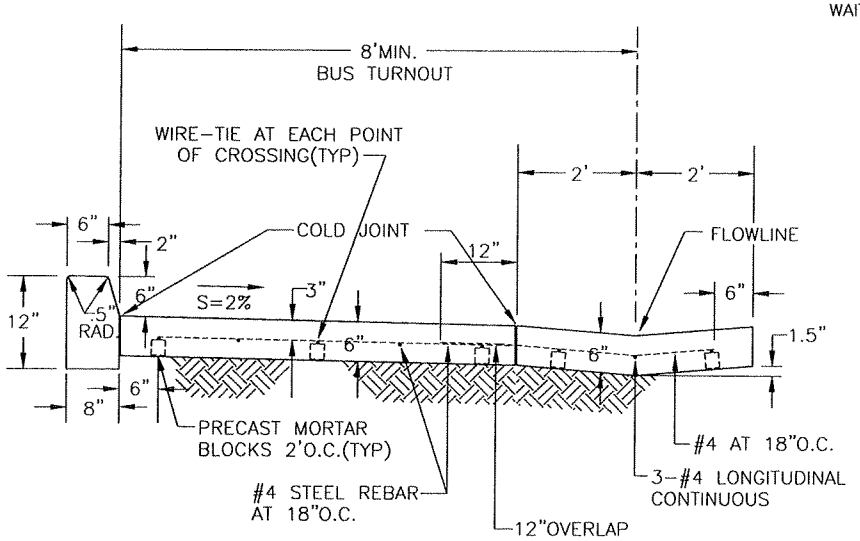

SECTION A-A

NOTE:

1. O.G. 95% RELATIVE COMPACTION BENEATH CONCRETE SLAB TO DEPTH OF 12".
2. CONCRETE FOR SLAB SHALL BE CLASS 'B' (5 SACK).
3. MAINTAIN 6" CLEARANCE BETWEEN ALL JOINTS AND ENDS OF STEEL RE-BAR.
4. EXPANSION JOINTS AT EACH 60 FOOT TANGENT POINT.
5. WEAKENED PLANE JOINTS SHALL BE PLACED AT A SPACING OF 20 FEET.

BUS TURNOUT MID-BLOCK TURNOUT DESIGN MINIMUM OF 17' LANDSCAPE RIGHT-OF-WAY	Andrew J. Benetti CITY ENGINEER PUBLIC WORKS DEPARTMENT ENGINEERING DIVISION REVISIONS OCT. 2002	11-07-02 PLAN APPROVAL DATE CITY OF REEDLEY ST-27A

NOTE:

1. THIS "STANDARD" IS A GUIDE ONLY AND DEVIATIONS WILL BE ACCEPTABLE WHERE CONDITIONS DICTATE.
2. DIMENSIONS SHOWN ARE DESIRABLE BUT DO NOT GOVERN.
3. ANY CHANGES OR DEVIATION MUST BE APPROVED BY THE CITY ENGINEER.

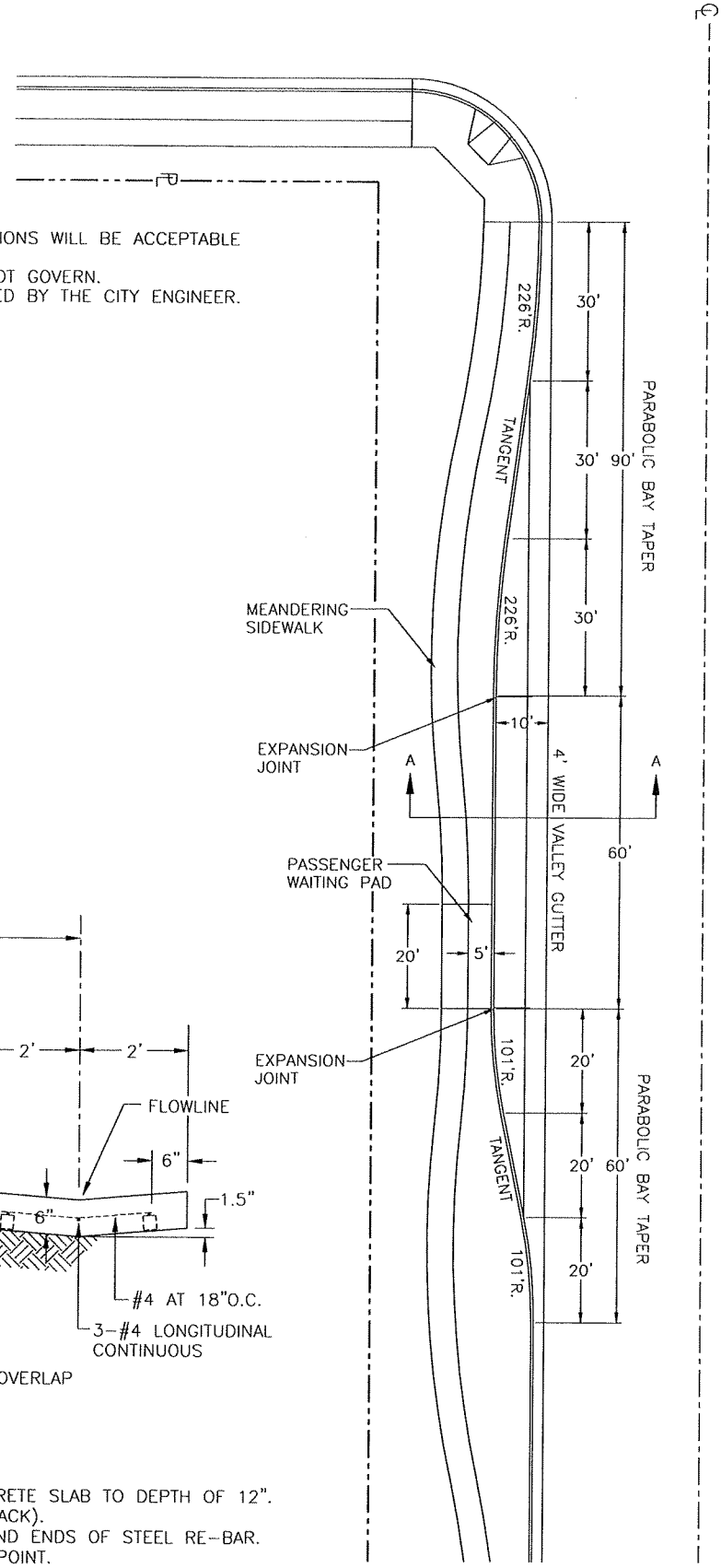

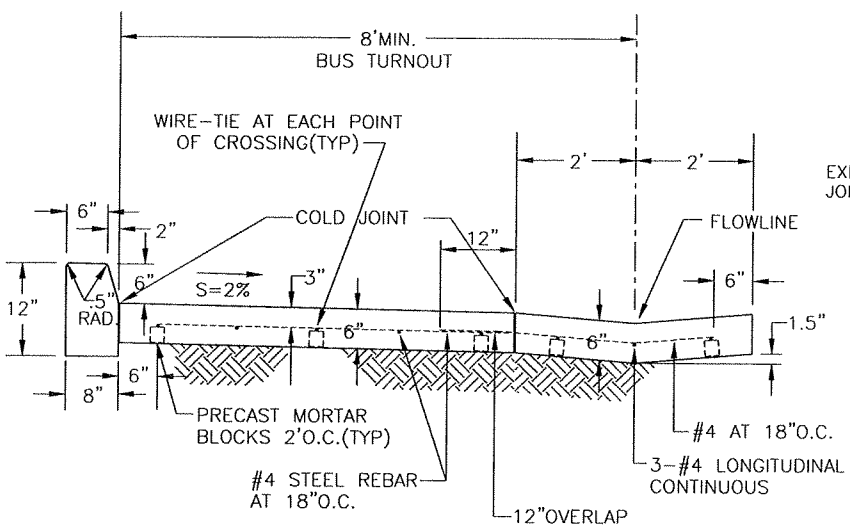

SECTION A-A

NOTE:

1. O.G. 95% RELATIVE COMPACTION BENEATH CONCRETE SLAB TO DEPTH OF 12".
2. CONCRETE FOR SLAB SHALL BE CLASS 'B' (5 SACK).
3. MAINTAIN 6" CLEARANCE BETWEEN ALL JOINTS AND ENDS OF STEEL RE-BAR.
4. EXPANSION JOINTS AT EACH 60 FOOT TANGENT POINT.
5. WEAKENED PLANE JOINTS SHALL BE PLACED AT A SPACING OF 20 FEET.

BUS TURNOUT MID-BLOCK TURNOUT DESIGN WITH GREATER THAN 24' LANDSCAPE RIGHT-OF-WAY	Andrew J. Benelli CITY ENGINEER PUBLIC WORKS DEPARTMENT ENGINEERING DIVISION REVISIONS OCT. 2002	11-07-02 PLAN APPROVAL DATE CITY OF REEDLEY ST-27B

(WET BARREL) FIRE HYDRANT ASSEMBLY

NOT TO SCALE

NOTES:

1. CAST IRON COVER SHALL BE MARKED "WATER".
2. TRADE NAMES ARE SPECIFIED HEREIN AS A STANDARD OF ACCEPTABLE QUALITY, EQUIPMENT OF EQUAL QUALITY MAY BE USED AFTER APPROVAL BY THE CITY ENGINEER.
3. A BLUE REFLECTIVE PAVEMENT MARKER, STATE OF CA TYPE C, SHALL BE PLACED 1' FROM CENTERLINE ON HYDRANT SIDE OF STREET.
4. VALVE SHALL BE APPROVED GATE VALVE AS PER STD. PLAN W-2A.
5. VALVE SHALL BE FLANGED TO TEE ON WATER MAIN.
6. 24" x 24" x 12" THICK P.C.C. PAD TO BE INSTALLED AROUND HYDRANT BURY.
7. FIRE HYDRANT TO BE PAINTED SAFETY YELLOW NUMBER 80 (2-COATS).
8. SINGLE STRAND 14 GA. COPPER WIRE TO BE LAID ALONG TOP OF NONMETALLIC PIPE AND HELD IN PLACE AT 5 FT. INTERVALS BY DUCT OR PLUMBERS TAPE AND CONNECTED TO ALL VALVES AND FITTINGS.
9. PROVIDE BREAK-OFF TYPE BOLTS.
10. COMMERCIAL SIDEWALK FIRE HYDRANT INSTALLATION TO BE 9 FT FROM FACE OF CURB TO CENTER OF FIRE HYDRANT.
11. RESIDENTIAL WITH A PARK STRIP FIRE HYDRANT INSTALLATION TO BE 5' FROM FACE OF CURB TO CENTER OF FIRE HYDRANT.
12. NO PARKING "PAINT CURB RED" 15' ON CENTER FROM HYDRANT PER V.C.22658.2.36.
13. FIRE HYDRANT TO BE SET 10 FT. FROM CURB RETURNS.
14. 3' CIRCUMFERENCE CLEARANCE MUST BE MAINTAINED AROUND F.H. PER FIRE CODE.

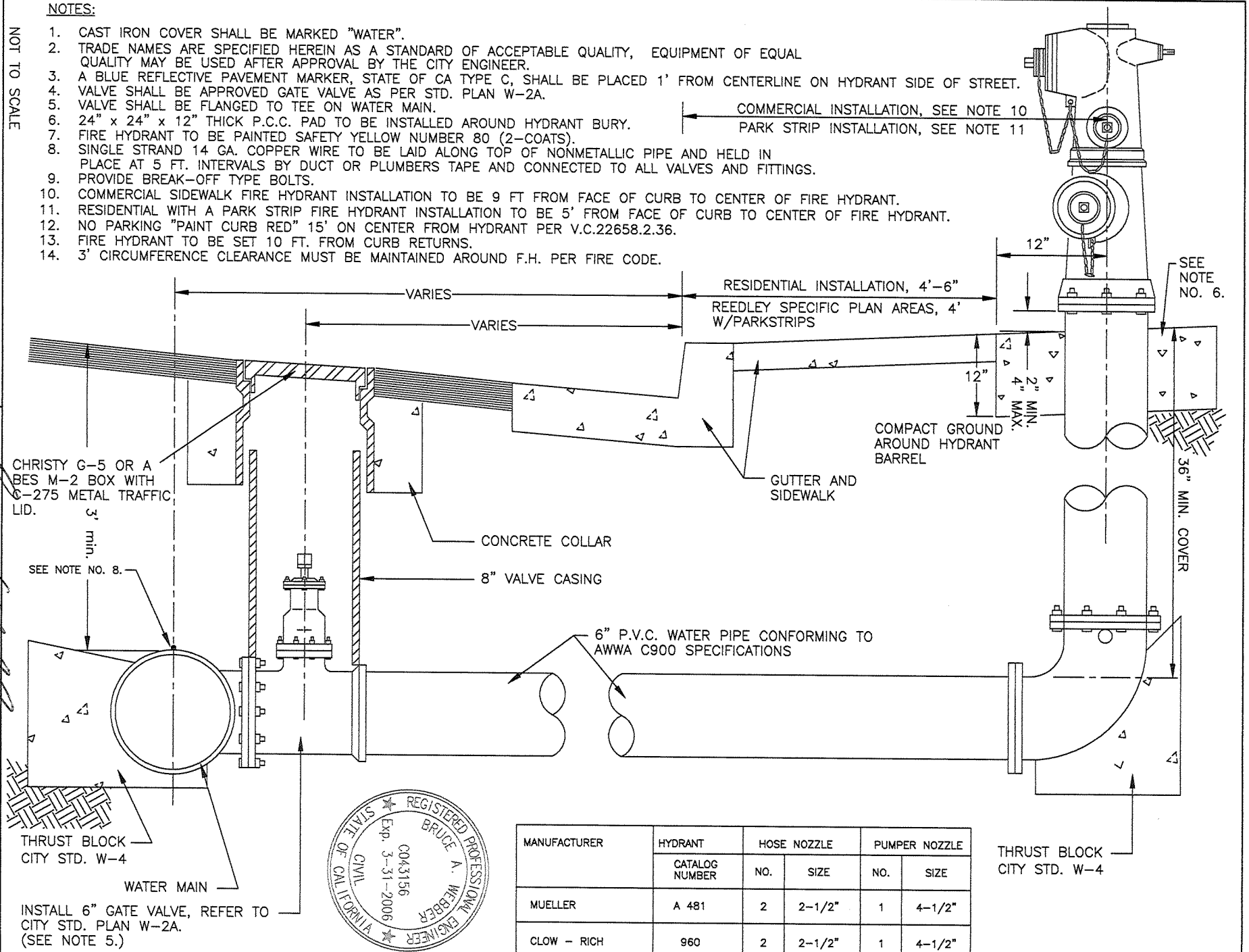

MANUFACTURER	HYDRANT	HOSE NOZZLE		PUMPER NOZZLE	
	CATALOG NUMBER	NO.	SIZE	NO.	SIZE
MUELLER	A 481	2	2-1/2"	1	4-1/2"
CLOW - RICH	960	2	2-1/2"	1	4-1/2"

REGISTERED PROFESSIONAL ENGINEER BRUCE A. WEBBER C043156 Exp. 3-31-2006 CIVIL STATE OF CALIFORNIA

CITY ENGINEER
PUBLIC WORKS DEPARTMENT
ENGINEERING DIVISION

1-23-06
PLAN APPROVAL DATE

REVISIONS:

JAN. 2006

CITY OF REEDLEY

W-1

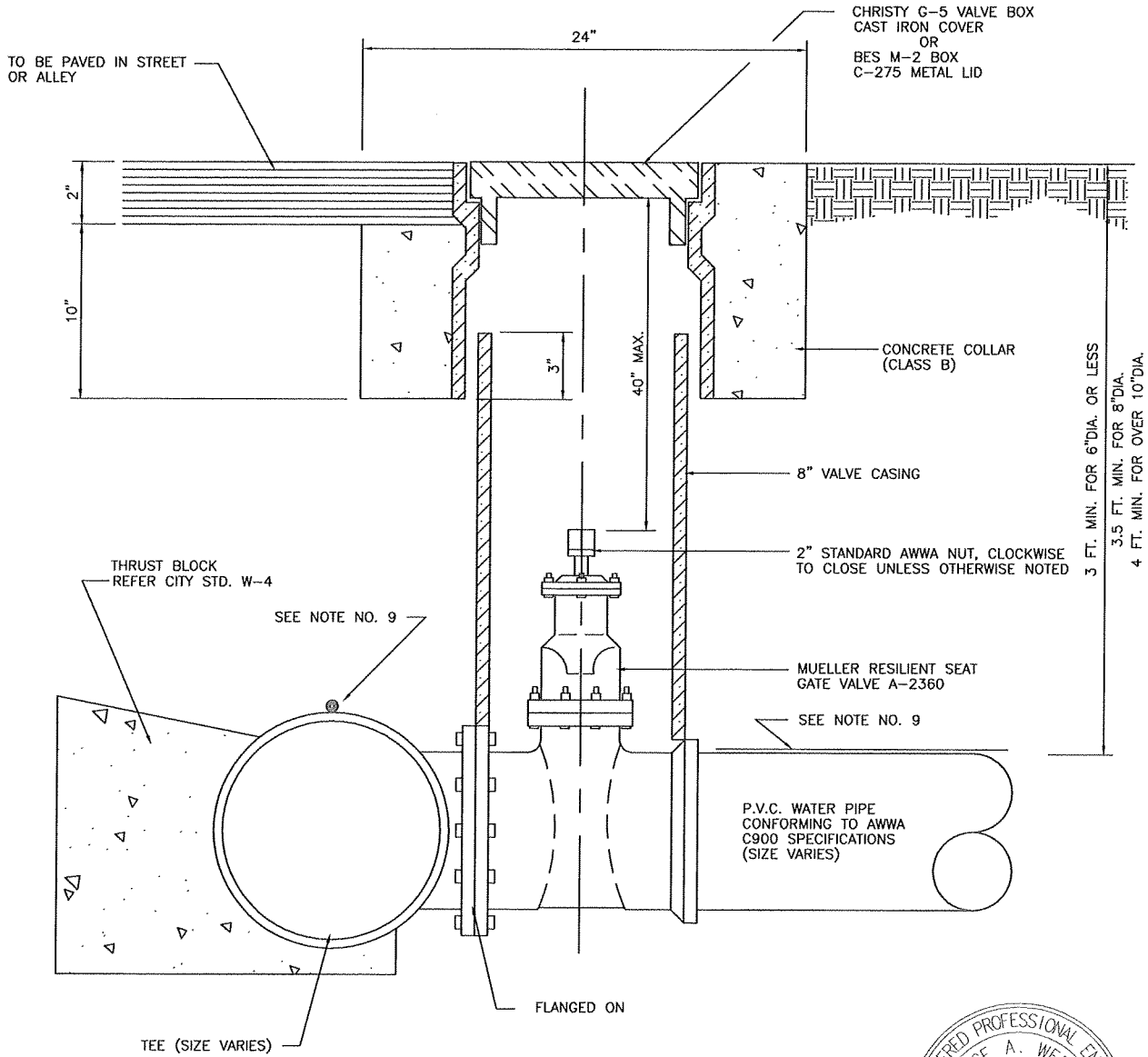

GATE VALVE INSTALLATION

REGISTERED PROFESSIONAL ENGINEER
BRUCE A. WEBBER
C043156
Exp. 3-31-2008
CIVIL
STATE OF CALIFORNIA

NOTES:

1. CAST IRON COVER SHALL BE LABELED "WATER".
2. FULL DEPTH COLLAR SHALL BE INSTALLED IN DIRT AREAS ONLY.
3. VALVE CASING MAY BE POLY (VINYL CHLORIDE) PIPE, SDR 35.
4. VALVE FITTINGS SHALL BE FLANGED OR A.C. FITTINGS AS SPECIFIED ON THE PLANS.
5. NOMINAL DIAMETER OF VALVE SHALL EQUAL NOMINAL DIAMETER OF PIPE.
6. VALVE BOX SHALL BE CLEANED AND THE OPERATOR NUT VISIBLE AND OPERATIONAL PRIOR TO ACCEPTANCE OF WORK.
7. TRADE NAMES ARE SPECIFIED HEREIN AS A STANDARD OF ACCEPTABLE QUALITY. EQUIPMENT OF EQUAL QUALITY MAY BE USED AFTER APPROVAL BY THE CITY ENGINEER.
8. IF DISTANCE FROM THE VALVE BOX COVER TO THE OPERATING NUT EXCEEDS 40 INCHES AN APPROVED EXTENSION MAST SHALL BE INSTALLED.
9. SINGLE STRAND 14 GAUGE COPPER WIRE TO BE LAID ALONG TOP OF NON-METALLIC PIPE AND HELD IN PLACE AT 5 FOOT INTERVALS BY DUCT OR PLUMBERS TAPE AND CONNECTED TO ALL VALVES AND FITTINGS.
10. STAINLESS STEEL MECHANICAL JOINT TAPPING SLEEVE MAY BE USED WITH EXISTING INSTALLATION AFTER APPROVAL BY THE CITY ENGINEER.

NOT TO SCALE

WATER VALVE	Bruce Webber CITY ENGINEER PUBLIC WORKS DEPARTMENT ENGINEERING DIVISION	1-16-07 PLAN APPROVAL DATE
	REVISIONS: JAN. 12, 2007	CITY OF REEDLEY W-2

N:\AutoCad Drawing Files\Standard Plans\W-2.dwg

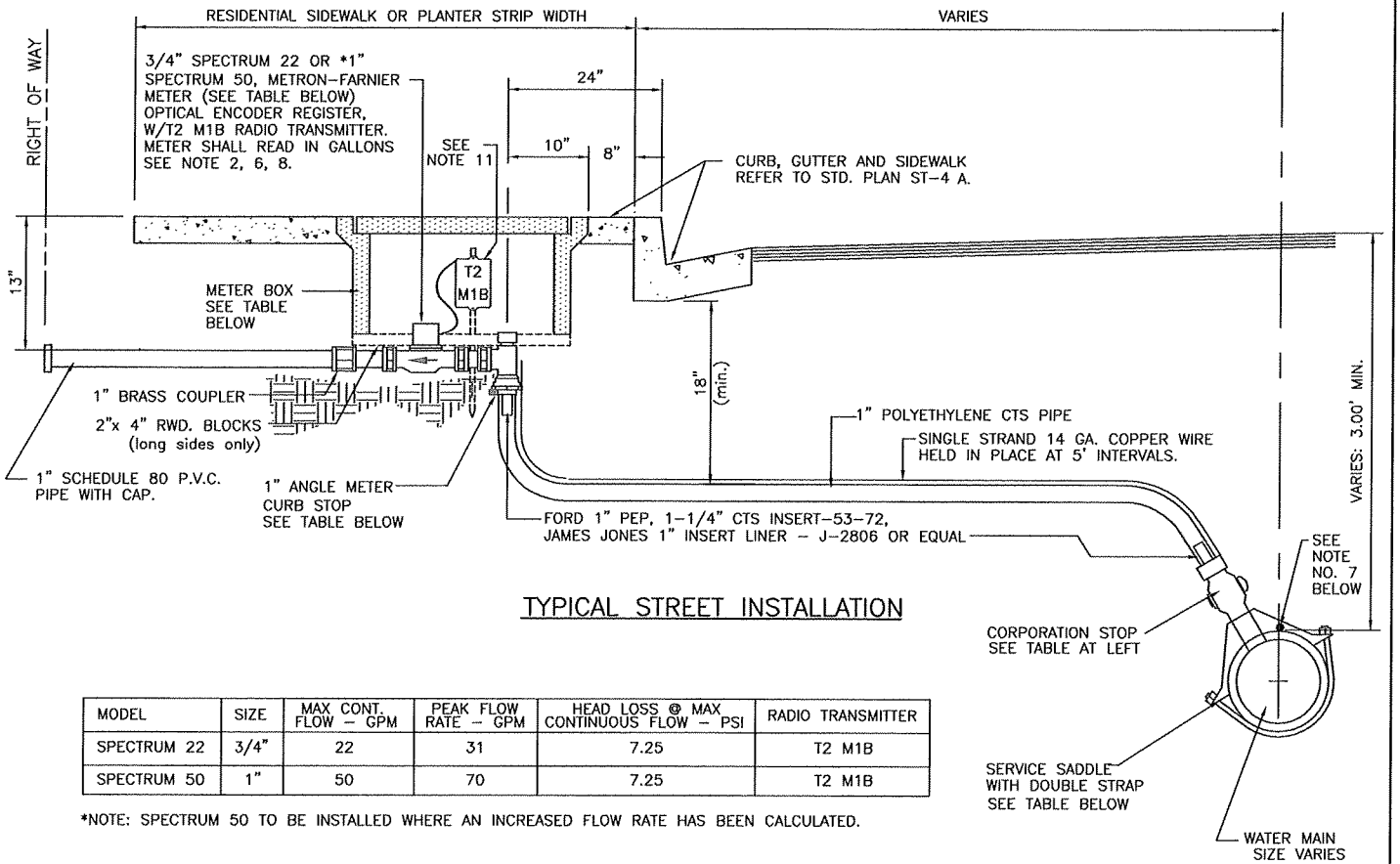

TYPICAL STREET INSTALLATION

MODEL	SIZE	MAX CONT. FLOW - GPM	PEAK FLOW RATE - GPM	HEAD LOSS @ MAX CONTINUOUS FLOW - PSI	RADIO TRANSMITTER
SPECTRUM 22	3/4"	22	31	7.25	T2 M1B
SPECTRUM 50	1"	50	70	7.25	T2 M1B

*NOTE: SPECTRUM 50 TO BE INSTALLED WHERE AN INCREASED FLOW RATE HAS BEEN CALCULATED.

MANUFACTURER	CURB STOP	CORPORATION STOP
JAMES JONES	J - 1927W	J - 3403

NON-TRAFFIC AREAS

MANUFACTURER	METER BOX	LID
CHRISTY	B 16 D	D30
BES	C-16-W	C16D

WATER MAIN	MANUFACTURER	SERVICE SADDLE
ASBESTOS CEMENT PIPE (EXISTING)	JAMES JONES	J - 940
	SMITH-BLAIR	311
ASTM C900 PVC PIPE	ROMAX	1015
	SMITH-BLAIR	315
	JAMES JONES	J-996R w/ I.P. THREADS

TRAFFIC AREAS AND DRIVEWAYS

MANUFACTURER	METER BOX	LID
CHRISTY	B 16 C	C30
BES	C-16-W	C16C

NOTES:

1. STEEL REINFORCEMENT REQUIRED AROUND UTILITY BOX WHEN PLACED IN SIDEWALK (SEE DETAIL ST-26).
2. METERS SHALL BE THE COLD DISPLACEMENT TYPE METER CONFORMING TO AWWA STD. C700. METERS SHALL BE AS MANUFACTURED BY METRON-FARNIER. LOCAL DISTRIBUTOR: CITY OF REEDLEY - BUILDING DIVISION (559)637-4200 EXT 225.
3. VALVE BOXES SHALL BE BROUGHT TO PROPER GRADE PRIOR TO ACCEPTANCE OF WORK.
4. THE INSIDE OF THE VALVE BOXES SHALL BE CLEANED SUCH THAT THE METER, METER STOPS ARE ACCESSIBLE AND OPERATIONAL PRIOR TO THE ACCEPTANCE OF THE WORK.
5. TRADE NAMES ARE SPECIFIED AS A STANDARD OF ACCEPTABLE QUALITY. EQUIPMENT OF EQUAL QUALITY MAY BE USED AFTER APPROVAL BY THE CITY ENGINEER.
6. NO GALVANIZED PIPE FITTINGS ARE TO BE USED IN METER ASSEMBLY INSTALLATION.
7. SINGLE STRAND 14 GAUGE COPPER WIRE TO BE LAID ALONG TOP OF NON-METALLIC PIPE AND HELD IN PLACE AT 5 FT. INTERVALS BY DUCT OR PLUMBERS TAPE AND CONNECTED TO ALL VALVES AND FITTINGS.
8. INSTALL METER WITH METER CONNECTION ADAPTERS (JAMES JONES J-134, 2 REQUIRED).
9. IN A RESIDENTIAL SUBDIVISION THE WATER SERVICE ASSEMBLY SHALL BE LOCATED AT THE CENTER OF THE LOT.
10. NO PLUMBING PUTTY ALLOWED ON ANY FITTING.
11. T2 M1B RADIO TRANSMITTER SHALL BE MOUNTED (LABEL SIDE FACING UP) INSIDE METER BOX, ON A 3/4" X 24" SCH. 40 PVC STAKE.

REGISTERED PROFESSIONAL ENGINEER BRUCE A. WEBBER C043156 Exp. 3-31-2008 CIVIL STATE OF CALIFORNIA

NOT TO SCALE

ONE INCH WATER SERVICE & ASSEMBLY STREET INSTALLATION

CITY ENGINEER
PUBLIC WORKS DEPARTMENT
ENGINEERING DIVISION

1-25-07
PLAN APPROVAL DATE

REVISIONS:
JAN. 5, 2007

DRAWN BY: C.TAMEZ

CITY OF REEDLEY

W-3A

N:\AutoCad Drawing Files\Standard Plans\W-3a(R).dwg

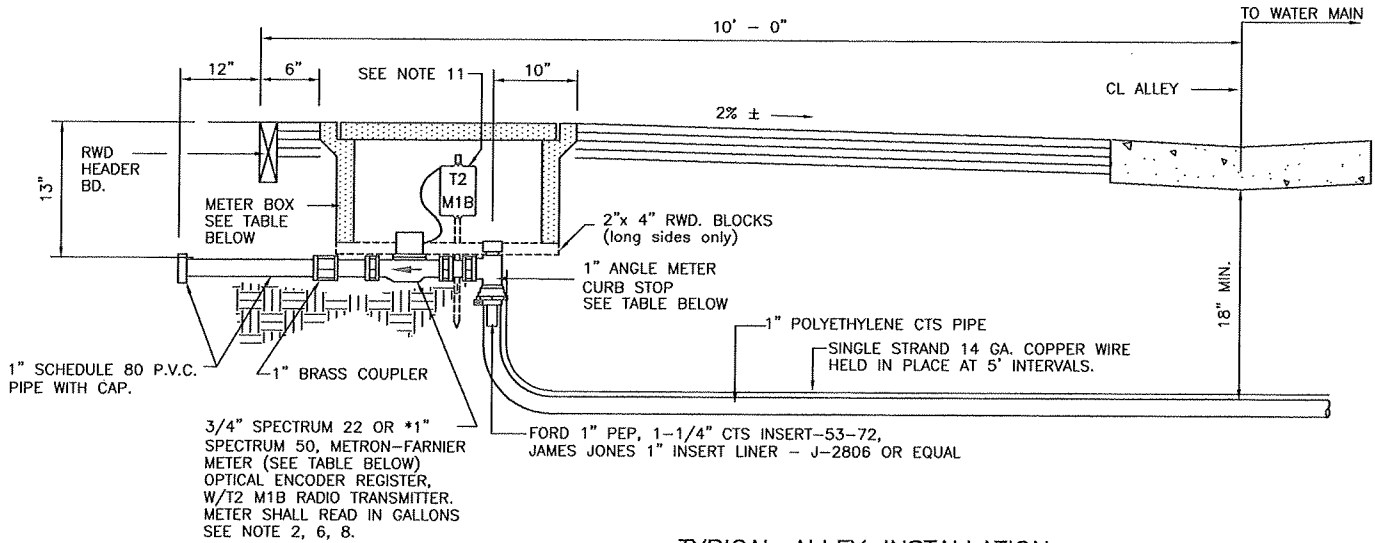

TYPICAL ALLEY INSTALLATION

MODEL	SIZE	MAX CONT. FLOW – GPM	PEAK FLOW RATE – GPM	HEAD LOSS @ MAX CONTINUOUS FLOW – PSI	RADIO TRANSMITTER
SPECTRUM 22	3/4"	22	31	7.25	T2 M1B
SPECTRUM 50	1"	50	70	7.25	T2 M1B

*NOTE: SPECTRUM 50 TO BE INSTALLED WHERE AN INCREASED FLOW RATE HAS BEEN CALCULATED.

MANUFACTURER	CURB STOP	CORPORATION STOP
JAMES JONES	J – 1927W	J – 3403

STANDARD ALLEY LOCATIONS

MANUFACTURER	METER BOX	LID
CHRISTY	B 16 D	D30
BES	C–16–W	C16D

WATER MAIN	MANUFACTURER	SERVICE SADDLE
ASBESTOS CEMENT PIPE (EXISTING)	JAMES JONES	J – 940
	SMITH–BLAIR	311
ASTM C900 PVC PIPE	ROMAX	1015
	SMITH–BLAIR	315
	JAMES JONES	J–996R w/ I.P. THREADS

TRAFFIC AREAS AND DRIVEWAYS

MANUFACTURER	METER BOX	LID
CHRISTY	B 16 C	C30
BES	C–16–W	C16C

NOTES:

1. STEEL REINFORCEMENT REQUIRED AROUND UTILITY BOX WHEN PLACED IN SIDEWALK (SEE DETAIL ST–26).
2. METERS SHALL BE THE COLD DISPLACEMENT TYPE METER CONFORMING TO AWWA STD. C700. METERS SHALL BE AS MANUFACTURED BY METRON–FARNIER. LOCAL DISTRIBUTOR: CITY OF REEDLEY – BUILDING DIVISION (559)637–4200 EXT 225.
3. VALVE BOXES SHALL BE BROUGHT TO PROPER GRADE PRIOR TO ACCEPTANCE OF WORK.
4. THE INSIDE OF THE VALVE BOXES SHALL BE CLEANED SUCH THAT THE METER, METER STOPS ARE ACCESSIBLE AND OPERATIONAL PRIOR TO THE ACCEPTANCE OF THE WORK.
5. TRADE NAMES ARE SPECIFIED AS A STANDARD OF ACCEPTABLE QUALITY. EQUIPMENT OF EQUAL QUALITY MAY BE USED AFTER APPROVAL BY THE CITY ENGINEER.
6. NO GALVANIZED PIPE FITTINGS ARE TO BE USED IN METER ASSEMBLY INSTALLATION.
7. SINGLE STRAND 14 GAUGE COPPER WIRE TO BE LAID ALONG TOP OF NON–METALLIC PIPE AND HELD IN PLACE AT 5 FT. INTERVALS BY DUCT OR PLUMBERS TAPE AND CONNECTED TO ALL VALVES AND FITTINGS.
8. INSTALL METER WITH METER CONNECTION ADAPTERS (JAMES JONES J–134, 2 REQUIRED).
9. IN A RESIDENTIAL SUBDIVISION THE WATER SERVICE ASSEMBLY SHALL BE LOCATED AT THE CENTER OF THE LOT.
10. NO PLUMBING PUTTY ALLOWED ON ANY FITTING.
11. T2 M1B RADIO TRANSMITTER SHALL BE MOUNTED (LABEL SIDE FACING UP) INSIDE METER BOX, ON A 3/4" X 24" SCH. 40 PVC STAKE.

REGISTERED PROFESSIONAL ENGINEER BRUCE A. WEBBER C043156 Exp. 3–31–2008 CIVIL STATE OF CALIFORNIA

NOT TO SCALE

ONE INCH WATER SERVICE & ASSEMBLY ALLEY INSTALLATION

CITY ENGINEER
PUBLIC WORKS DEPARTMENT
ENGINEERING DIVISION

1-9-07
PLAN APPROVAL DATE

REVISIONS:
JAN. 5, 2007

DRAWN BY: C.TAMEZ

CITY OF REEDLEY

W–3B

N:\AutoCad Drawing Files\Standard Plans\W–3b(R).dwg

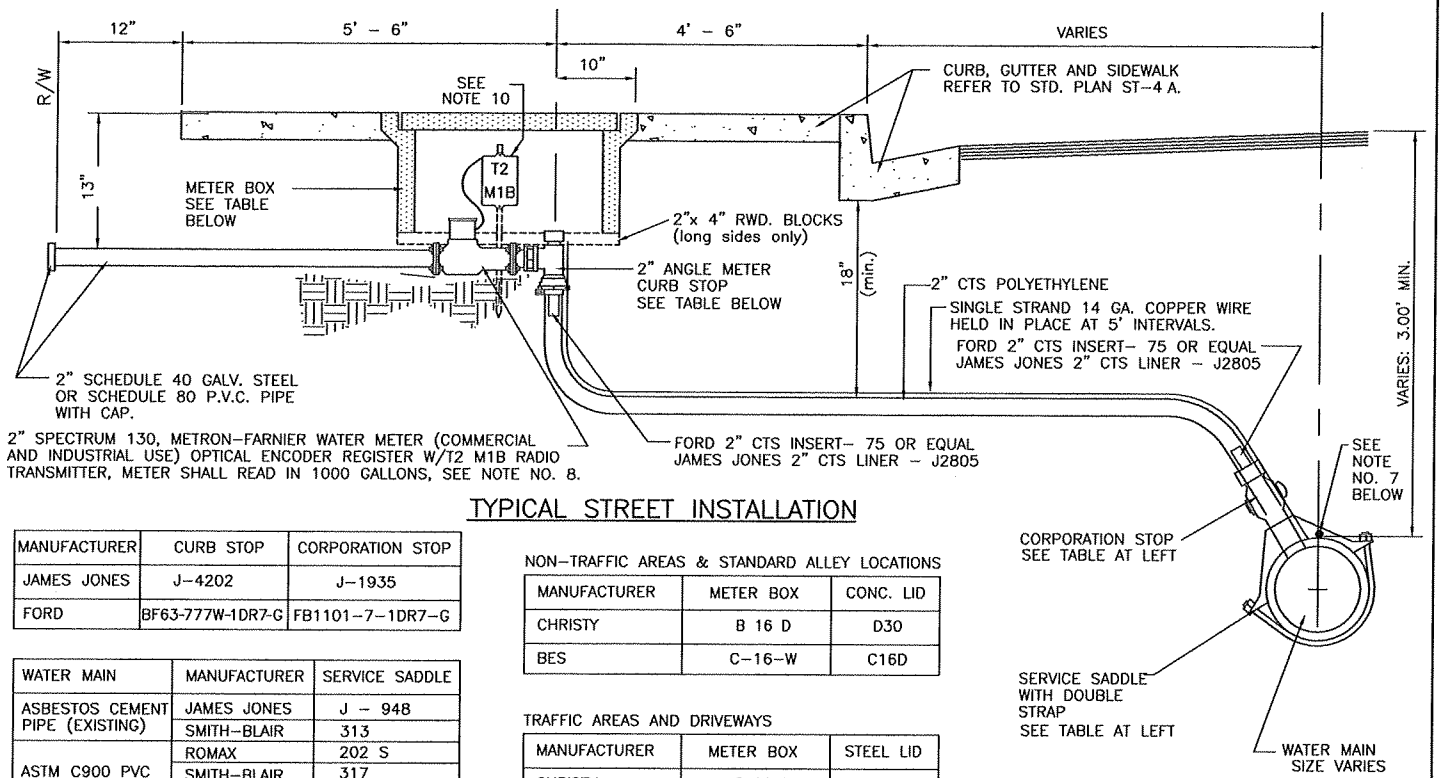

TYPICAL STREET INSTALLATION

MANUFACTURER	CURB STOP	CORPORATION STOP
JAMES JONES	J-4202	J-1935
FORD	BF63-777W-1DR7-G	FB1101-7-1DR7-G

WATER MAIN	MANUFACTURER	SERVICE SADDLE
ASBESTOS CEMENT PIPE (EXISTING)	JAMES JONES	J - 948
	SMITH-BLAIR	313
ASTM C900 PVC PIPE	ROMAX	202 S
	SMITH-BLAIR	317
	JAMES JONES	J-996R w/ I.P. THREADS

NON-TRAFFIC AREAS & STANDARD ALLEY LOCATIONS

MANUFACTURER	METER BOX	CONC. LID
CHRISTY	B 16 D	D30
BES	C-16-W	C16D

TRAFFIC AREAS AND DRIVEWAYS

MANUFACTURER	METER BOX	STEEL LID
CHRISTY	B 16 C	C30
BES	C-16-W	C16C

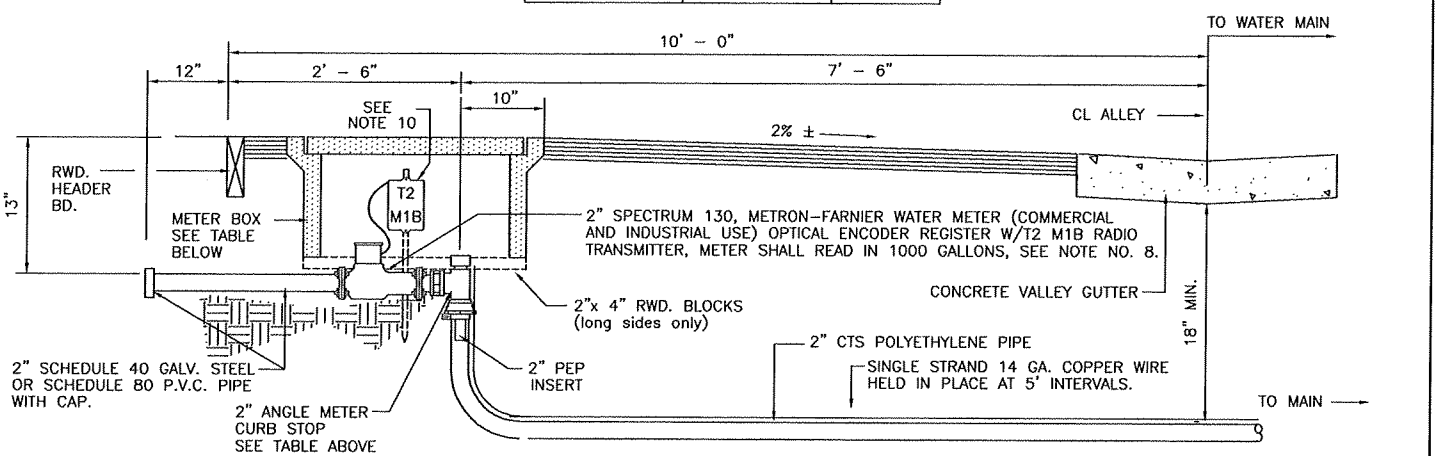

TYPICAL ALLEY INSTALLATION

NOTES:

1. STEEL REINFORCEMENT REQUIRED AROUND UTILITY BOX WHEN PLACED IN SIDEWALK (SEE DETAIL ST-26).
2. METERS SHALL BE THE COLD WATER TYPE METER CONFORMING TO AWWA STD. C700. METERS SHALL BE AS MANUFACTURED BY METRON-FARNIER. LOCAL DISTRIBUTOR: CITY OF REEDLEY - BUILDING DIVISION (559)637-4200 EXT 225.
3. VALVE BOXES SHALL BE BROUGHT TO PROPER GRADE PRIOR TO ACCEPTANCE OF WORK.
4. THE INSIDE OF THE VALVE BOXES SHALL BE CLEANED SUCH THAT THE METER, METER STOPS ARE ACCESSIBLE AND OPERATIONAL PRIOR TO THE ACCEPTANCE OF THE WORK.
5. TRADE NAMES ARE SPECIFIED HEREIN AS A STANDARD OF ACCEPTABLE QUALITY. EQUIPMENT OF EQUAL QUALITY MAY BE USED AFTER APPROVAL BY THE CITY ENGINEER.
6. DIELECTRIC FITTING REQUIRED BETWEEN CURB STOP AND GALVANIZED STEEL PIPE HOUSE SERVICE.
7. SINGLE STRAND 14 GAUGE COPPER WIRE TO BE LAID ALONG TOP OF NON-METALLIC PIPE AND HELD IN PLACE AT 5 FT. INTERVALS BY DUCT OR PLUMBERS TAPE AND CONNECTED TO ALL VALVES AND FITTINGS.
8. INSTALL METER WITH METER CONNECTION ADAPTERS. JAMES JONES J-134, 2 REQUIRED.
9. NO PLUMBING PUTTY ALLOWED ON ANY FITTING.
10. T2 M1B RADIO TRANSMITTER SHALL BE MOUNTED (LABEL SIDE FACING UP) INSIDE METER BOX, ON A 3/4" X 24" SCH. 40 PVC STAKE.

NOT TO SCALE

REGISTERED PROFESSIONAL ENGINEER BRUCE A. WEBBER C043156 Exp. 3-31-2008 CIVIL STATE OF CALIFORNIA

TWO INCH WATER SERVICE & ASSEMBLY	CITY ENGINEER PUBLIC WORKS DEPARTMENT ENGINEERING DIVISION 1-9-07 PLAN APPROVAL DATE
	REVISIONS: JAN. 5, 2007 DRAWN BY: C.TAMEZ
	CITY OF REEDLEY W-3C

N:\AutoCad Drawing Files\Standard Plans\W-3c(R).dwg

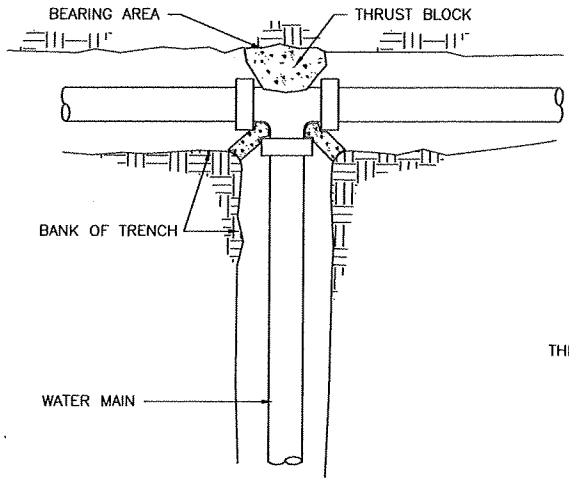

TEE

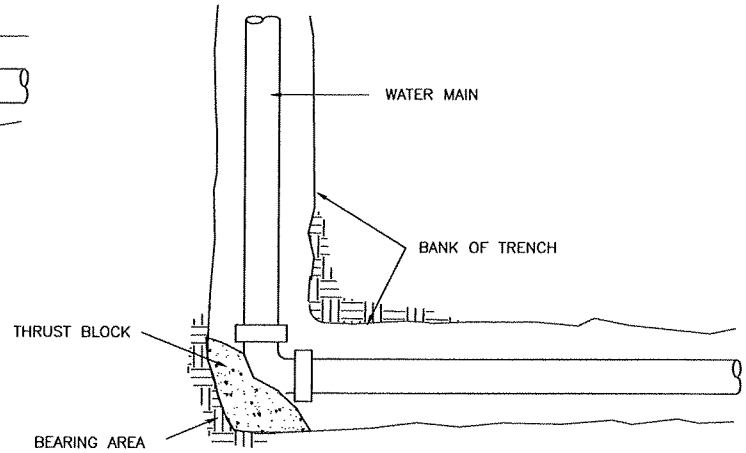

ELBOW

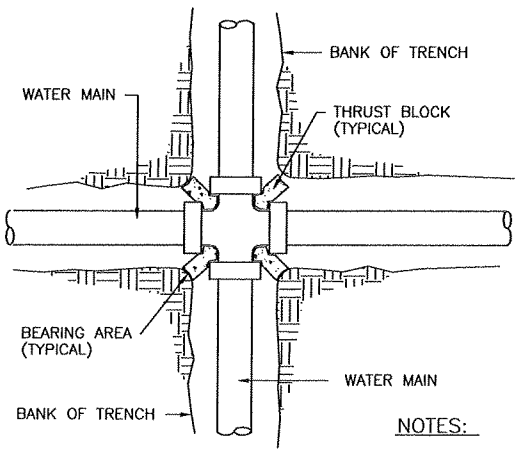

CROSS

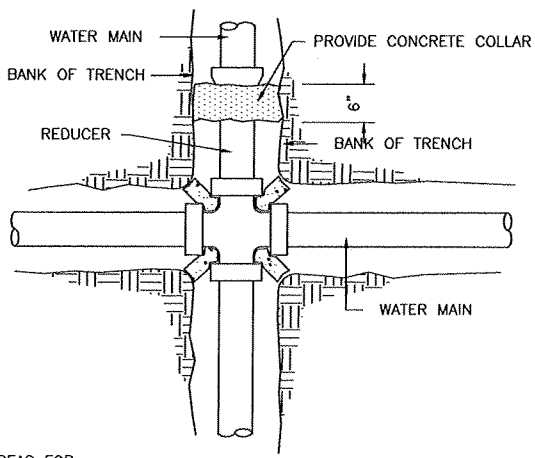

REDUCER

NOTES:

1. ENGINEER TO COMPUTE BEARING AREAS FOR CASES NOT COVERED HEREIN.
2. CONCRETE FOR THRUST BLOCKS SHALL BE CLASS "B" CONCRETE.

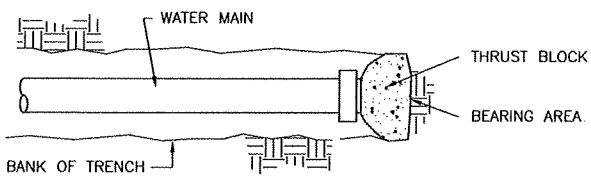

PLUG

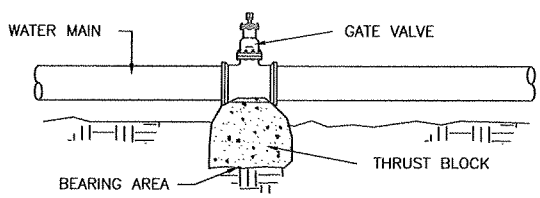

GATE VALVE

TABLE OF BEARING AREAS REQUIRED (IN SQUARE FEET)

PIPE DIAMETER	6"	8"	10"	12"
CROSS TEE ELBOW PLUG FIRE HYDRANT	3	5	8	11
45° BEND	2	3	5	6
22.5° BEND	1	2	3	3
VALVE	0	0	0	9

REGISTERED PROFESSIONAL ENGINEER
BRUCE A. WEBBER
C043156
Exp. 3-31-2006
CIVIL
STATE OF CALIFORNIA

NOT TO SCALE

CONCRETE THRUST BLOCKS

CITY ENGINEER
PUBLIC WORKS DEPARTMENT
ENGINEERING DIVISION

1-2-06
PLAN APPROVAL DATE

REVISIONS:
DEC. 2005

CITY OF REEDLEY

W-4

NOT TO SCALE

2" BLOW-OFF ASSEMBLY

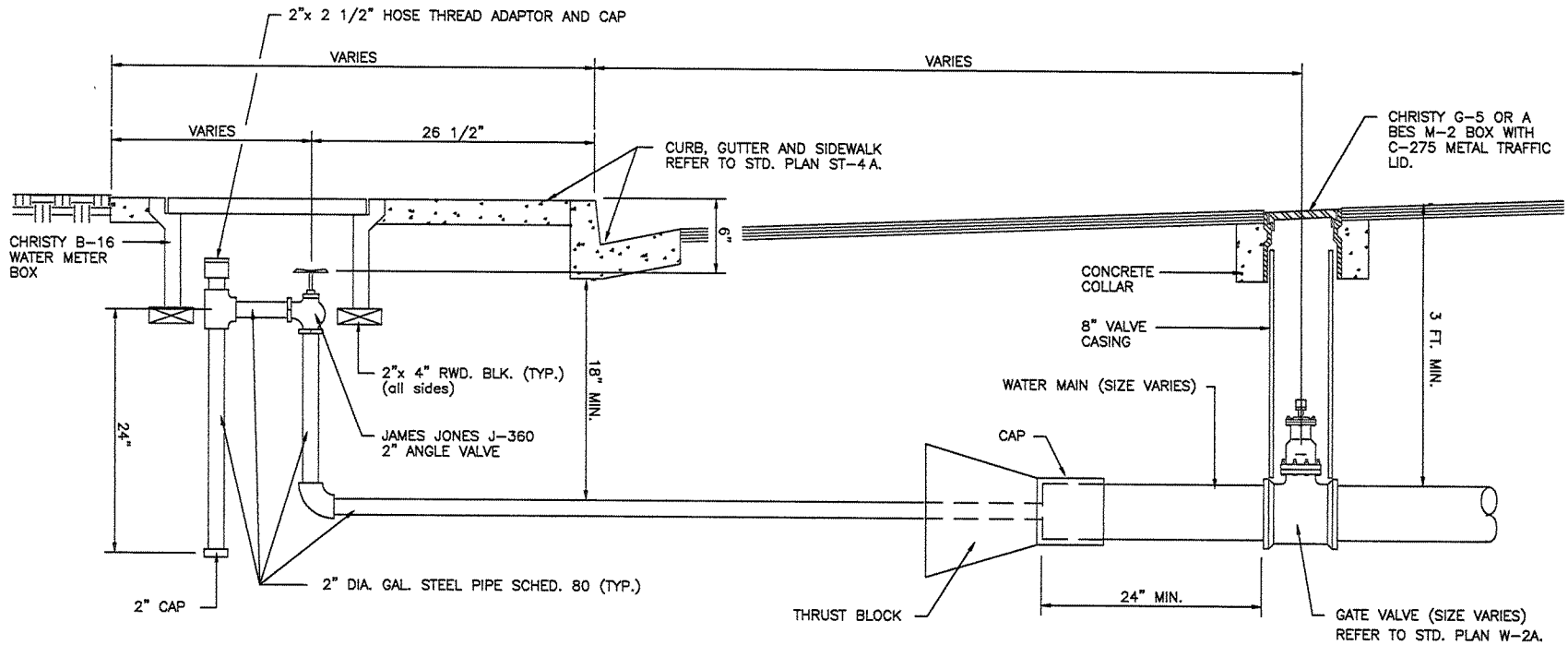

TYPICAL INSTALLATION

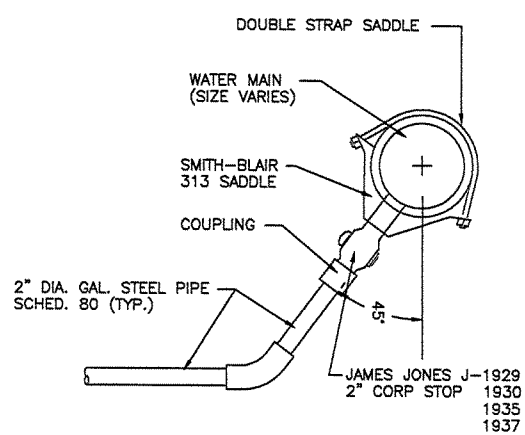

ALTERNATE CONNECTION DETAIL

nts

NOTES:

1. ALL PIPE AND FITTINGS FOR ASSEMBLY SHALL BE SCHEDULE 80 GALVANIZED STEEL, ASTM A120.
2. ALTERNATE CONNECTION TO BE INSTALLED ONLY WHEN ALLOWED IN THE SPECIAL PROVISION BY THE CITY ENGINEER.
3. THE 2" PIPE ENCASED WITH THE CONCRETE THRUST BLOCK SHALL BE PAINTED WITH RUST RESISTANT PAINT AND WRAPPED WITH PLASTIC TAPE TO A THICKNESS OF 20 MILLS.
4. WATER VALVE CASING AND VALVE BOX AND LID SHALL BE INCLUDED IN ASSEMBLY WHEN INSTALLED AS A TYPICAL INSTALLATION.
5. NO SERVICE SHALL BE LOCATED BETWEEN WATER VALVE AND THE END OF THE WATER MAIN.
6. WATER VALVE NOT REQUIRED WHEN BLOW-OFF INSTALLED ON CUL-DE-SAC.
7. P.V.C. WATER MAIN SHALL CONFORM TO AWWA C900 SPECIFICATIONS.
8. VALVE BOXES SHALL BE BROUGHT TO PROPER GRADE PRIOR TO ACCEPTANCE OF WORK.

REGISTERED PROFESSIONAL ENGINEER
BRUCE A. WEBBER
C043156
Exp. 3-31-2006
CIVIL
STATE OF CALIFORNIA

CITY ENGINEER
PUBLIC WORKS DEPARTMENT
ENGINEERING DIVISION

1-23-06
PLAN APPROVAL DATE

REVISIONS:
JAN. 2006

CITY OF REEDLEY

W-5

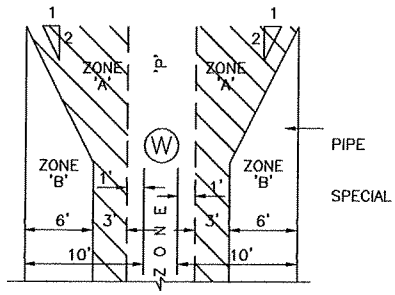

CASE – 1
PARALLEL CONSTRUCTION

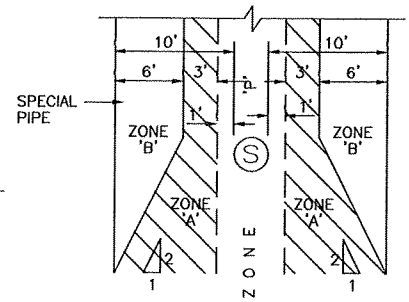

CASE – 2
PARALLEL CONSTRUCTION

SITUATIONS ENCOUNTERED

CASE–1 NEW SEWER LINE, NEW OR EXISTING WATER MAIN.

CASE–2 NEW WATER MAIN, EXISTING SEWER LINE.

FOR CASE–1, THE ALTERNATE CONSTRUCTION CRITERIA APPLY TO THE SEWER LINE.

FOR CASE–2, THE ALTERNATE CONSTRUCTION CRITERIA MAY APPLY TO EITHER OR BOTH THE WATER MAIN OR SEWER LINE.

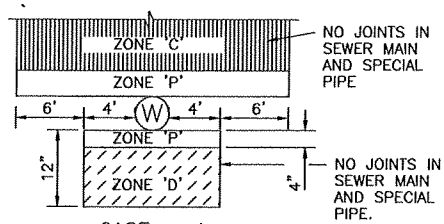

CASE – 1
PERPENDICULAR CONSTRUCTION

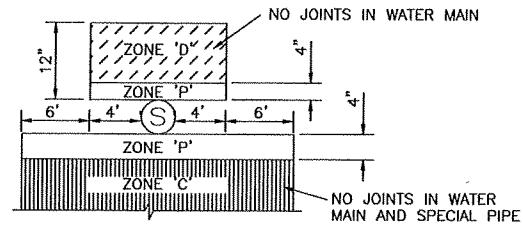

CASE – 2
PERPENDICULAR CONSTRUCTION

SPECIAL CONSTRUCTION REQUIREMENTS

CASE 1: NEW SEWER BEING INSTALLED – NEW OR EXISTING WATER MAIN

IF A NEW SEWER IS CONSTRUCTED WITHIN ZONE A, B, C, OR D OF A PROPOSED OR EXISTING WATER MAIN, THE FOLLOWING SPECIAL REQUIREMENTS WILL APPLY FOR THE SEWER.

ZONE	SPECIAL REQUIREMENTS
A	SEWER LINES WILL NOT BE PERMITTED IN THIS ZONE WITHOUT SPECIAL PERMISSION FROM THE DEPARTMENT OF HEALTH.
B	A SEWER LINE PLACED PARALLEL TO A WATER MAIN SHALL BE CONSTRUCTED OF EXTRA–STRENGTH VITRIFIED CLAY PIPE WITH COMPRESSION JOINTS; OR CLASS 4000, TYPE II ASBESTOS–CEMENT PIPE WITH RUBBER GASKET JOINTS; OR POLY(VINYL CHLORIDE) PIPE WITH RUBBER RING JOINTS; OR REINFORCED CONCRETE PRESSURE PIPE WITH REINFORCED CONCRETE COLLARS AROUND THE JOINTS WHICH COLLARS SHALL HAVE A MINIMUM THICKNESS OF 6" AND A MINIMUM LENGTH ALONG THE PIPE OF 6" ON EITHER SIDE OF THE JOINT; OR CAST IRON PIPE WITH COMPRESSION JOINTS.
C or D	A SEWER LINE CROSSING A WATER MAIN SHALL BE CONSTRUCTED OF CLASS 150 OR STRONGER CAST IRON PIPE WITH HOT DIP BITUMINOUS COATING AND APPROVED MECHANICAL JOINTS; OR A CONTINUOS SECTION OF CLASS 200 POLY(VINYL CHLORIDE) PIPE; OR REINFORCED CONCRETE PRESSURE PIPE CENTERED OVER THE PIPE BEING CROSSED; OR ANY SEWER PIPE ENCASED WITHIN A CONTINUOUS STEEL CASING SHALL HAVE A THICKNESS OF NOT LESS THAN 1/2" AND ALL VOIDS BETWEEN THE SEWER LINE AND THE CASING PRESSURE GROUTED WITH SAND–CEMENT GROUT; OR (ZONE–D ONLY) ANY SEWER PIPE SEPARATED BY A REINFORCED CONCRETE BLANKET AS SHOWN IN STANDARD PLAN NO. W–7.
P	PROHIBITED ZONE

CASE 2: NEW WATER MAIN BEING INSTALLED – EXISTING SEWER

IF A PROPOSED WATER MAIN WILL BE LOCATED WITHIN ZONE A, B, C, OR D, THE FOLLOWING SPECIAL REQUIREMENTS WILL APPLY FOR THE PROPOSED WATER MAIN.

ZONE	SPECIAL REQUIREMENTS
A	NO WATER MAIN SHALL BE CONSTRUCTED WITHOUT PERMISSION FROM THE DEPARTMENT OF PUBLIC HEALTH.
B	IF THE SEWER PARALLELING THE WATER MAIN DOES NOT MEET THE CASE–1, ZONE–B REQUIREMENTS, THE WATER MAIN SHALL BE CONSTRUCTED OF DUCTILE IRON PIPE WITH HOT DIP BITUMINOUS COATING; OR CLASS 200, TYPE II, ASBESTOS–CEMENT PRESSURE PIPE; OR CLASS 200 PRESSURE RATED POLY(VINYL CHLORIDE) PIPE OR EQUIVALENT.
C	IF THE SEWER CROSSING THE WATER MAIN DOES NOT MEET THE CASE–1, ZONE–C REQUIREMENTS, THE WATER MAIN SHALL HAVE NO JOINTS IN ZONE–C AND BE CONSTRUCTED OF DUCTILE IRON PIPE WITH HOT DIP BITUMINOUS COATING; OR CLASS 200 PRESSURE RATED POLY(VINYL CHLORIDE) PIPE OR EQUIVALENT AND THE SEWER SHALL BE ENCASED WITH REINFORCED CONCRETE AS SHOWN IN STANDARD PLAN W–7.
D	IF THE SEWER CROSSING THE WATER MAIN DOES NOT MEET THE REQUIREMENTS FOR ZONE–D, CASE–1, THE WATER MAIN SHALL HAVE NO JOINTS WITHIN FOUR (4') FEET FROM EITHER SIDE OF THE SEWER AND SHALL BE CONSTRUCTED OF DUCTILE IRON PIPE WITH HOT DIP BITUMINOUS COATING; OR CLASS 200 PRESSURE RATED POLY(VINYL CHLORIDE) PIPE OR EQUIVALENT; OR DIPPED AND WRAPPED 1/2" THICK WELDED STEEL PIPE.
P	PROHIBITED ZONE

NOTES:

1. ALL DIMENSIONS ARE FROM THE OUTSIDE OF THE WATER MAIN TO THE OUTSIDE OF THE SEWER LATERAL OR MAIN.
2. COMPRESSION JOINTS ARE RUBBER RING OR GASKET JOINTS.
3. MECHANICAL JOINTS ARE BOLTED JOINTS.

REGISTERED PROFESSIONAL ENGINEER
BRUCE A. WEBBER
C043156
Exp. 3-31-2008
CIVIL
STATE OF CALIFORNIA

NOT TO SCALE

SPECIAL CONSTRUCTION REQUIREMENTS FOR SEWER AND WATER SEPARATION WHERE REQUIRED SEPARATION CANNOT BE MAINTAINED	CITY ENGINEER PUBLIC WORKS DEPARTMENT ENGINEERING DIVISION	4-4-06 PLAN APPROVAL DATE
	REVISIONS: MAR. 2006	CITY OF REEDLEY W–6

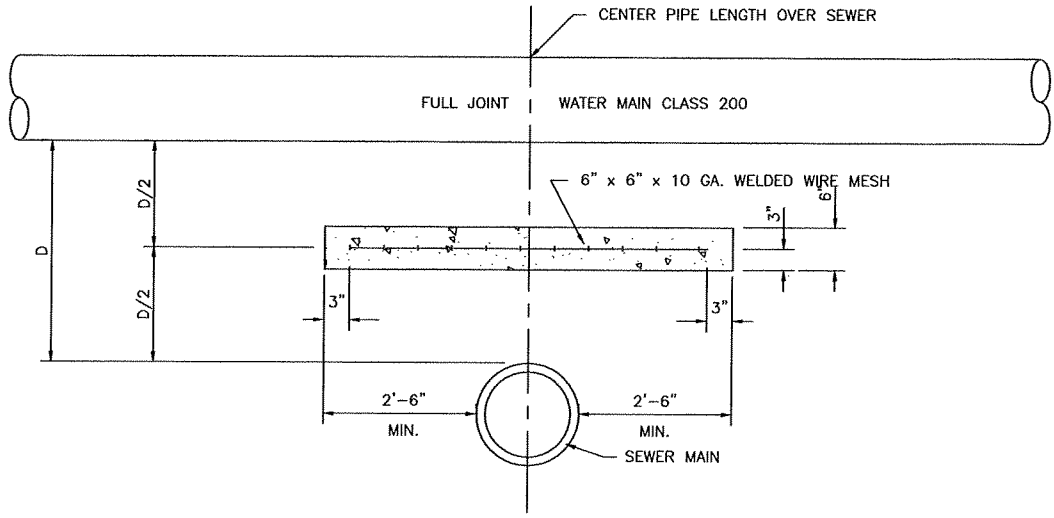

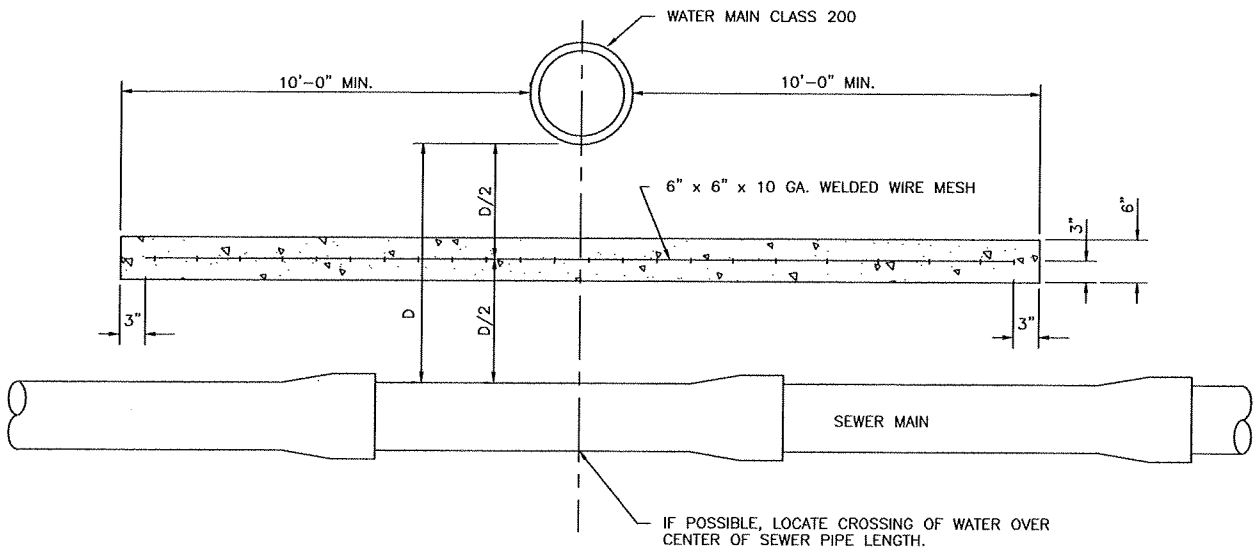

REINFORCED CONCRETE BLANKET

NOTES:
1. CONCRETE SHALL BE CLASS "B" (5 SACK CEMENT / C.Y. CONCRETE)

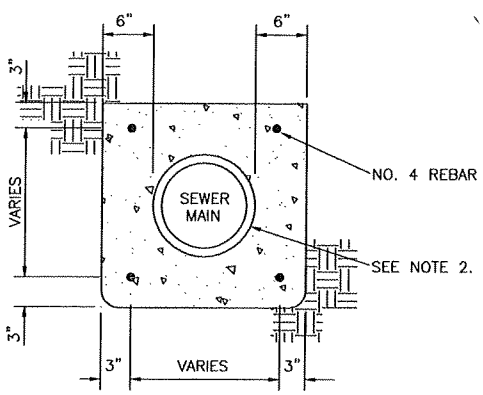

SECTION X-X

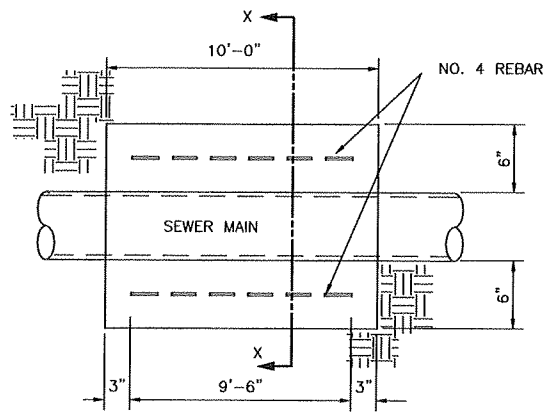

REINFORCED CONCRETE ENCASEMENT

NOTES:
1. CONCRETE SHALL BE CLASS "B" (5 SACK CEMENT / C.Y. CONCRETE)
2. WRAP SEWER MAIN WITH 15 lb. FELT.

NOT TO SCALE

REGISTERED PROFESSIONAL ENGINEER
BRUCE A. WEBBER
C043156
Exp. 3-31-2006
CIVIL
STATE OF CALIFORNIA

CONCRETE BLANKET / REINFORCED CONCRETE ENCASEMENT FOR SEWER AND WATER SEPARATION

CITY ENGINEER
PUBLIC WORKS DEPARTMENT
ENGINEERING DIVISION

1-2-06
PLAN APPROVAL DATE

REVISIONS:
DEC. 2005

CITY OF REEDLEY
W-7

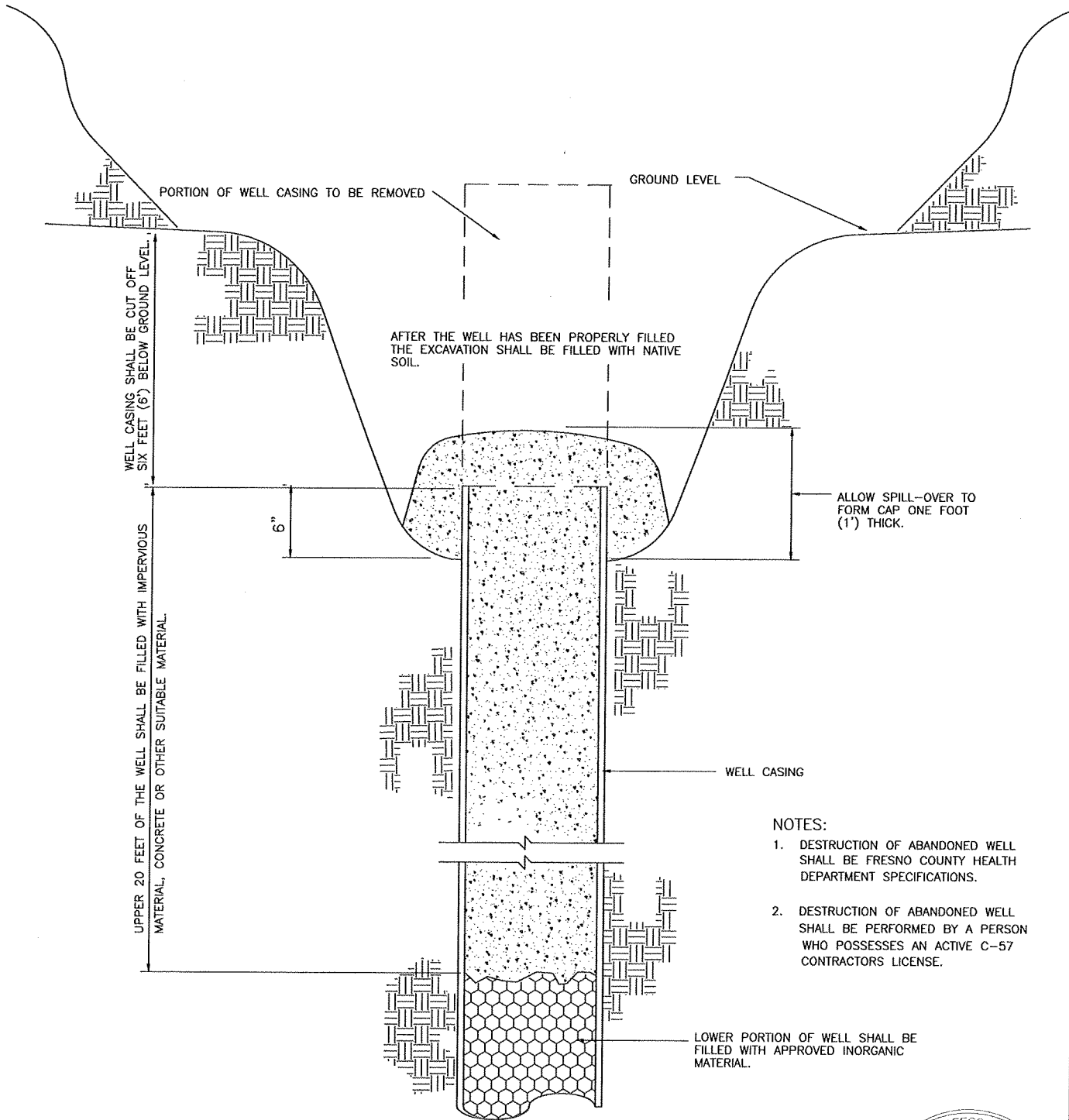

NOTES:

1. DESTRUCTION OF ABANDONED WELL SHALL BE FRESNO COUNTY HEALTH DEPARTMENT SPECIFICATIONS.
2. DESTRUCTION OF ABANDONED WELL SHALL BE PERFORMED BY A PERSON WHO POSSESSES AN ACTIVE C-57 CONTRACTORS LICENSE.

REGISTERED PROFESSIONAL ENGINEER
BRUCE A. WEBBER
C043156
Exp. 3-31-2006
CIVIL
STATE OF CALIFORNIA

NOT TO SCALE

WATER WELL ABANDONMENT

REQUIREMENTS FOR DESTRUCTION OF WELLS IN URBAN AREAS

CITY ENGINEER
PUBLIC WORKS DEPARTMENT
ENGINEERING DIVISION

12-27-05
PLAN APPROVAL DATE

REVISIONS:

CITY OF REEDLEY

W-8

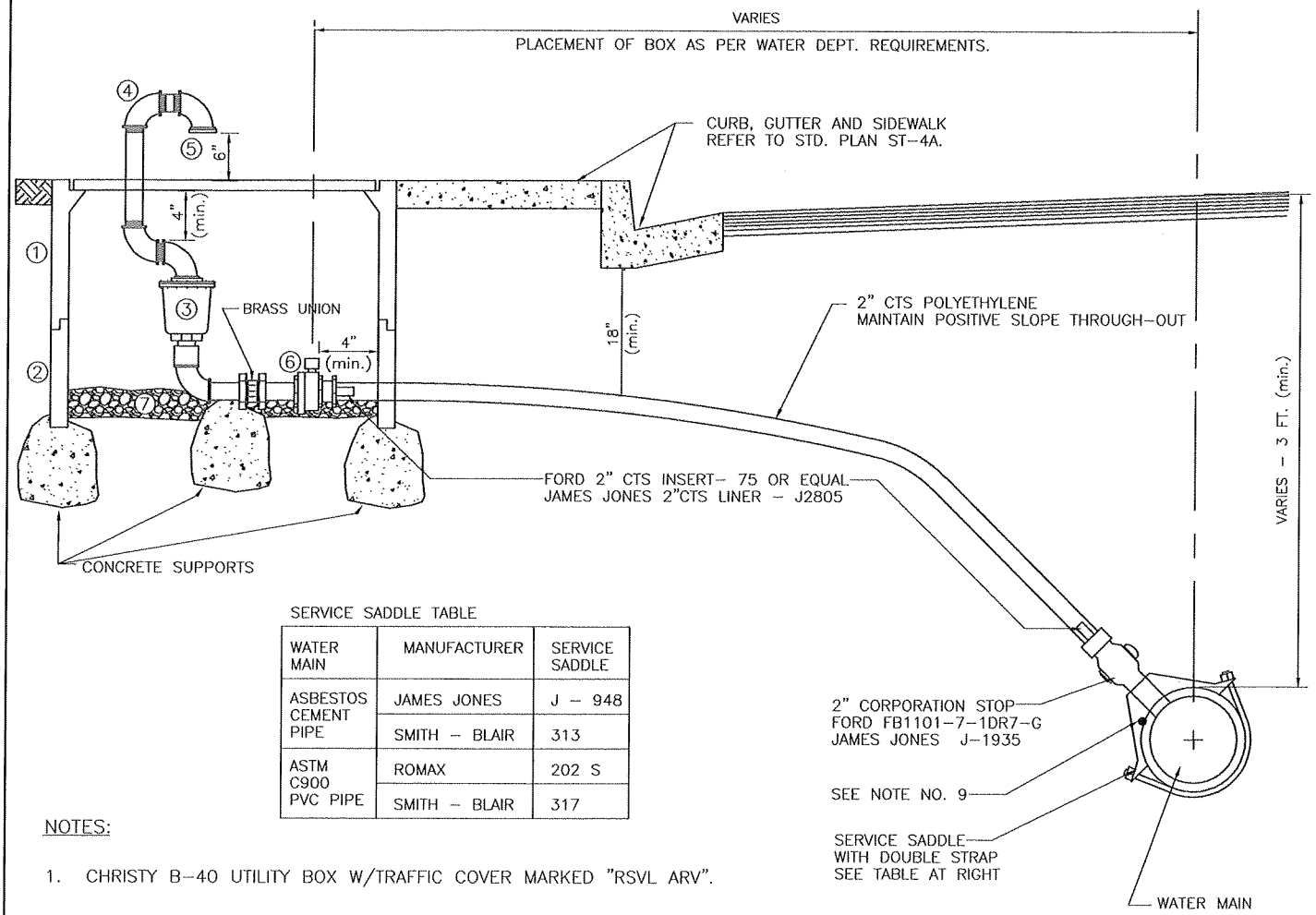

SERVICE SADDLE TABLE

WATER MAIN	MANUFACTURER	SERVICE SADDLE
ASBESTOS CEMENT PIPE	JAMES JONES	J - 948
	SMITH - BLAIR	313
ASTM C900 PVC PIPE	ROMAX	202 S
	SMITH - BLAIR	317

NOTES:

1. CHRISTY B-40 UTILITY BOX W/TRAFFIC COVER MARKED "RSVL ARV".
2. CHRISTY EXTENSION SPOOL (IF NECESSARY).
3. 2" AIR AND VACUUM VALVE, APCO S-144.
4. ALL 2" DIAMETER GALVANIZED STEEL PIPE SHALL BE SCHEDULE 80, ASTM A120.
5. BRASS CAP WITH 9 DRILLED 1/16" HOLES OR #18 X 18 STAINLESS STEEL WIRE NETTING (INSECT SCREEN).
6. 2" CURB STOP, FORD BF63-777W-1DR7-G OR JAMES JONES J-1939W.
7. 3" DEEP DRAIN ROCK.
8. TRADE NAMES ARE SPECIFIED HEREIN AS A STANDARD OF ACCEPTABLE QUALITY. EQUIPMENT OF EQUAL QUALITY MAY BE USED AFTER APPROVAL BY THE CITY ENGINEER.
9. LOCATION SHALL BE DETERMINED IN THE FIELD BY THE CITY ENGINEER.
10. SINGLE STRAND 14 GAUGE COPPER WIRE TO BE LAID ALONG TOP OF NONMETALIC PIPE AND HELD IN PLACE AT 5 FT. INTERVALS BY DUCT OR PLUMBER TAPE, CONNECTED TO ALL VALVES AND FITTINGS.
11. P.V.C. WATER MAIN SHALL CONFORM TO AWWA C900 SPECIFICATIONS.
12. DIELECTRIC FITTINGS ARE REQUIRED BETWEEN CURB STOP AND GALVANIZED STEEL PIPE SERVICE.
13. VALVE BOXES SHALL BE BROUGHT TO PROPER GRADE PRIOR TO ACCEPTANCE OF WORK.
14. THE INSIDE OF THE CURB BOX SHALL BE CLEANED SUCH THAT THE CURB STOP AND METER ARE ACCESSIBLE AND OPERATIONAL PRIOR TO ACCEPTANCE OF WORK.
15. CONCRETE SHALL BE CLASS 'B' - 6 SACK MIX.

REGISTERED PROFESSIONAL ENGINEER
BRUCE A. WEBBER
C043156
Exp. 3-31-2006
CIVIL
STATE OF CALIFORNIA

NOT TO SCALE

2" AIR- VACUUM VALVE	CITY ENGINEER PUBLIC WORKS DEPARTMENT ENGINEERING DIVISION	1-23-06 PLAN APPROVAL DATE
	REVISIONS: JAN. 2006	CITY OF REEDLEY W-9

WATER SAMPLING STATION

NOT TO SCALE

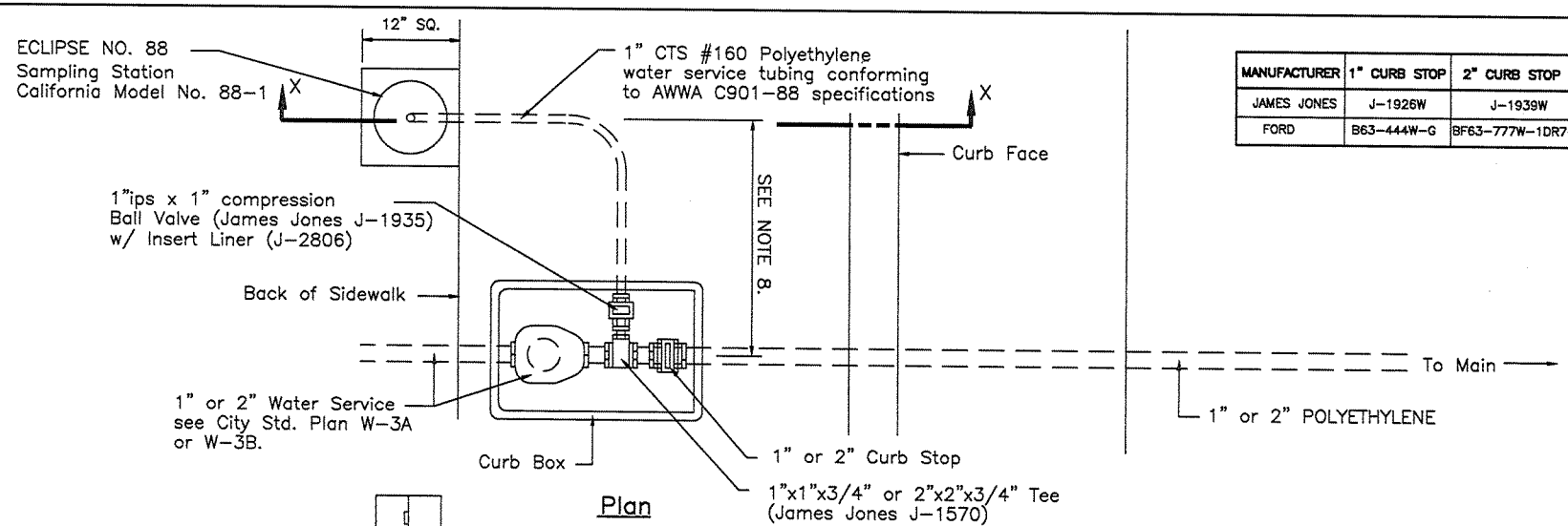

Plan

MANUFACTURER	1" CURB STOP	2" CURB STOP
JAMES JONES	J-1926W	J-1939W
FORD	B63-444W-G	BF63-777W-1DR7-G

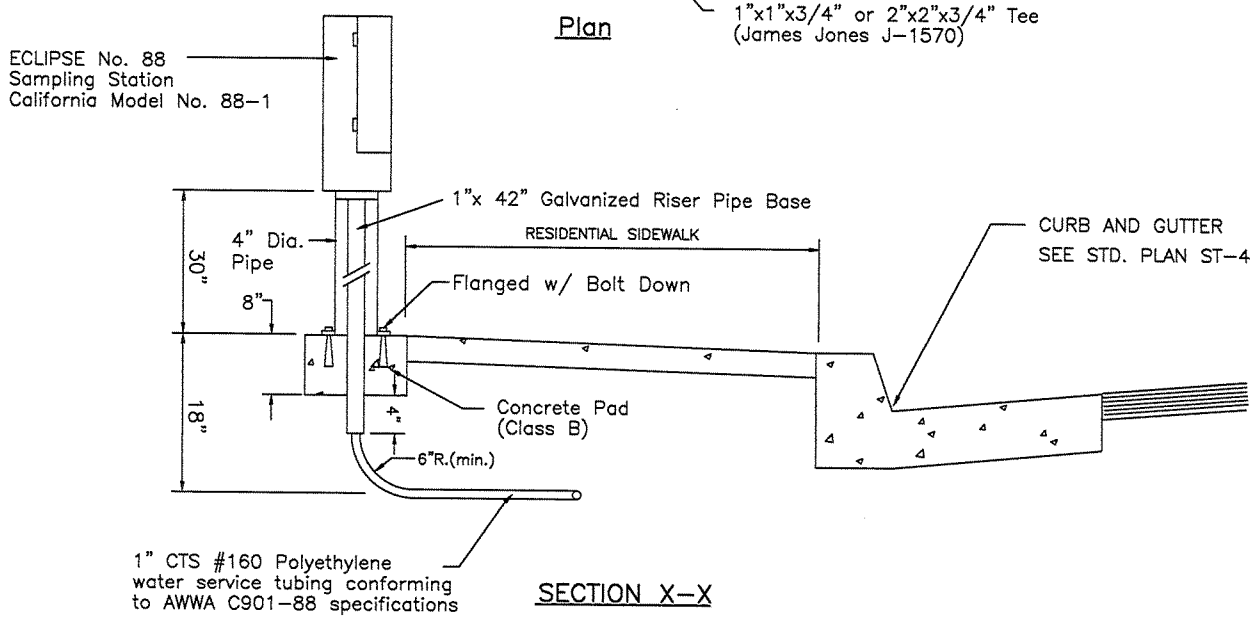

SECTION X-X

NOTES:

1. TRADE NAMES ARE SPECIFIED HEREIN AS A STANDARD OF ACCEPTABLE QUALITY EQUIPMENT OF EQUAL QUALITY MAY BE USED AFTER APPROVAL BY THE CITY ENGINEER.
2. DIELECTRIC FITTING REQUIRED BETWEEN CURB STOP AND GALVANIZED STEEL PIPE.
3. ALTERNATE CONNECTION TO BE INSTALLED ONLY WHEN ALLOWED IN THE SPECIAL PROVISIONS OR BY THE CITY ENGINEER.
4. CONCRETE SHALL BE CLASS 'B' – 6 SACK MIX.
5. LOCATION SHALL BE DETERMINED IN FIELD BY CITY ENGINEER.
6. VALVE BOXES SHALL BE BROUGHT TO PROPER GRADE PRIOR TO ACCEPTANCE OF WORK.
7. TO BE DETERMINED IN THE FIELD BY THE DEPARTMENT OF PUBLIC WORKS.
8. SAMPLING STATION SHALL BE PAINTED W/GLIDDEN #554 DEEP GREEN EXTERIOR ENAMEL.

REGISTERED PROFESSIONAL ENGINEER
BRUCE A. WEBBER
C043156
Exp. 3-31-2006
CIVIL
STATE OF CALIFORNIA

CITY ENGINEER
PUBLIC WORKS DEPARTMENT
ENGINEERING DIVISION

PLAN APPROVAL DATE

REVISIONS:
JAN. 2006

CITY OF REEDLEY

W-10

DOUBLE CHECK VALVE BACKFLOW PREVENTION INSTALLATION

NOT TO SCALE

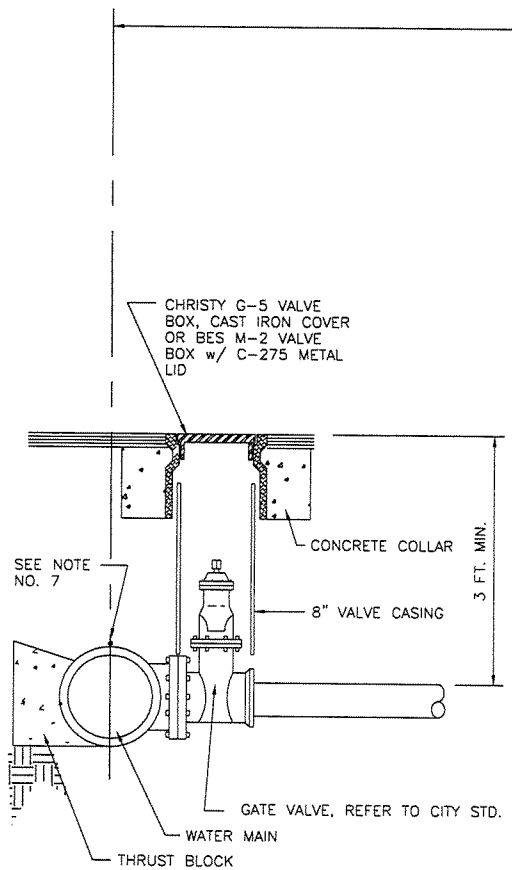

Double Check Valve Assembly
FEBCO 870, "N" SHAPE OR FEBCO 850, CONVENTIONAL IN-LINE

Double Check Detector Assembly
FEBCO 876, "N" SHAPE (SHOWN) OR FEBCO 856, CONVENTIONAL IN-LINE
FOR ON-SITE 8" FIRE HYDRANT RUN INSTALLATIONS
AND FOR FIRE SPRINKLER SYSTEM INSTALLATIONS

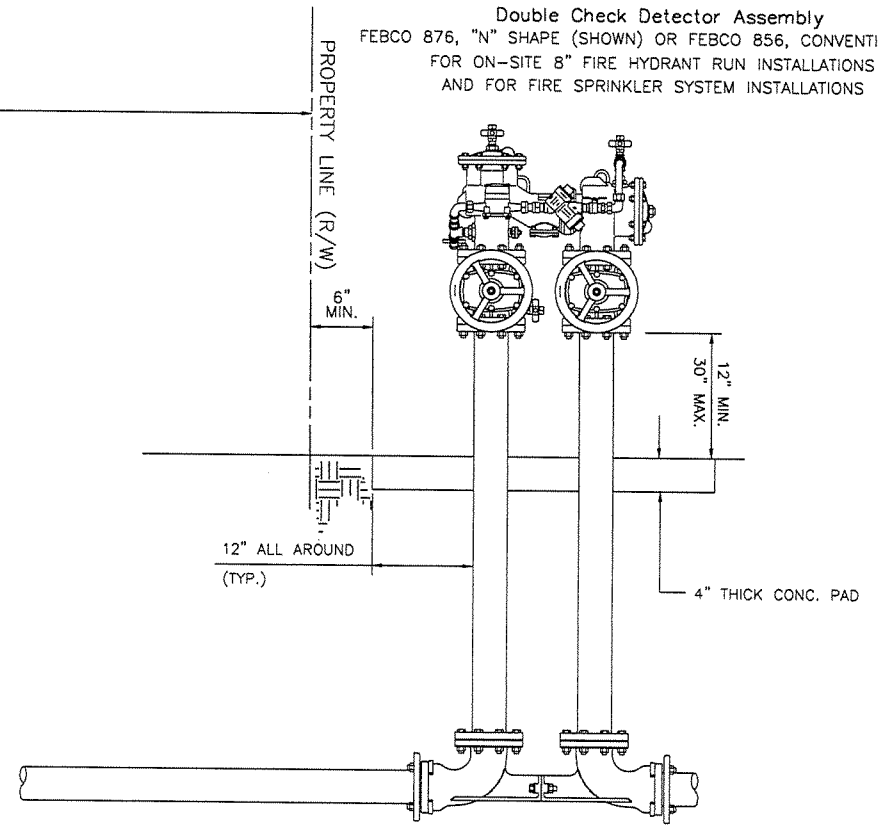

NOTES:

1. APPROVED BACKFLOW PREVENTION ASSEMBLY SHALL BE INSTALLED ON EACH SERVICE LINE TO A CUSTOMER'S ON-SITE FIRE HYDRANT RUN AT OR NEAR THE PROPERTY LINE.
2. CAST IRON COVER SHALL BE MARKED "WATER".
3. TRADE NAMES ARE SPECIFIED HEREIN AS A STANDARD OF ACCEPTABLE QUALITY. EQUIPMENT OF EQUAL QUALITY MAY BE USED AFTER APPROVAL BY THE CITY ENGINEER.
4. WATER VALVE SHALL BE APPROVED GATE VALVE AS PER STD. PLAN W-2A
5. GATE VALVE SHALL BE FLANGED TO TEE IN MAIN.
6. DIMENSIONS OF CONCRETE PAD TO BE DETERMINED BY THE CITY ENGINEER FOR EACH JOB.
7. SINGLE STRAND 14 GAUGE COPPER WIRE TO BE LAID ALONG TOP OF NONMETALIC PIPE AND HELD IN PLACE AT 5 FT. INTERVALS BY DUCT OR PLUMBER TAPE, CONNECT TO ALL VALVES AND FITTINGS.
8. P.V.C. WATER MAIN SHALL CONFORM TO AWWA C900 SPECIFICATIONS.
9. DUCTILE IRON PIPE SHALL CONFORM TO AWWA C110 SPECIFICATIONS.
10. DOUBLE CHECK DETECTOR BACKFLOW PREVENTOR SHALL BE INSTALLED BY A LICENSED PLUMBING CONTRACTOR.

CITY ENGINEER
PUBLIC WORKS DEPARTMENT
ENGINEERING DIVISION

10-10-02
PLAN APPROVAL DATE

REVISIONS:

CITY OF REEDLEY

W-11

BACKFLOW INSTALLATION REDUCED PRESSURE (R.P.) VALVE

NOT TO SCALE

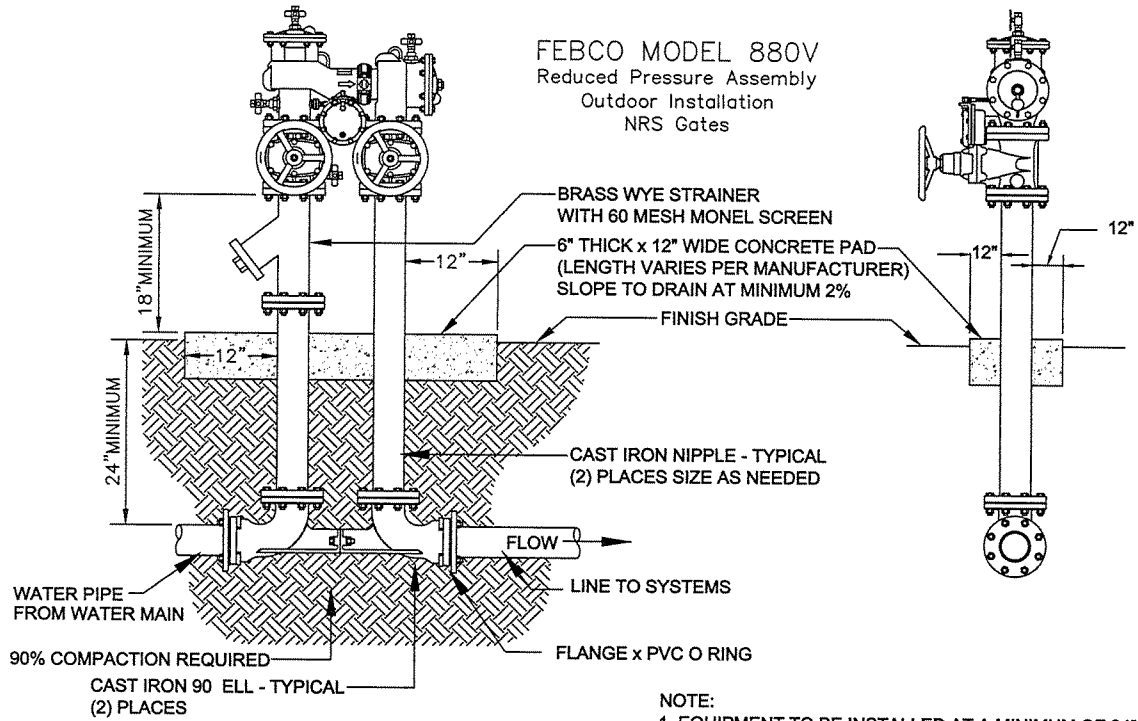

NOTE:
1. EQUIPMENT TO BE INSTALLED AT A MINIMUM OF 24" FROM ANY STRUCTURES OR HARDSCAPING.
2. ALL ABOVE GROUND ASSEMBLY SHALL RECEIVE (2) COATS OF RED PRIMER AND (1) COAT EXTERIOR ENAMEL - COLOR AS SELECTED BY LANDSCAPE ARCHITECT.
3. WHEN UNIT IS NEXT TO A STRUCTURE (ie.WALL, BUILDING, ETC.) MOUNT TEST COCKS ON OPEN OR NON-STRUCTURE SIDE.

NOTES:

1. APPROVED BACKFLOW PRESSURE REDUCER ASSEMBLY SHALL BE INSTALLED ON EACH SERVICE LINE TO A CUSTOMER'S SYSTEM AT OR NEAR THE PROPERTY LINE.
2. TRADE NAMES ARE SPECIFIED HEREIN AS A STANDARD OF ACCEPTABLE QUALITY. EQUIPMENT OF EQUAL QUALITY MAY BE USED AFTER APPROVAL BY THE CITY ENGINEER.
3. DIMENSIONS OF CONCRETE PAD TO BE DETERMINED BY THE CITY ENGINEER FOR EACH JOB.
4. SINGLE STRAND 14 GAUGE COPPER WIRE TO BE LAID ALONG TOP OF NONMETALIC PIPE AND HELD IN PLACE AT 5 FT. INTERVALS BY DUCT OR PLUMBER TAPE, CONNECTED TO ALL VALVES, FITTINGS & HYDRANT ASSEMBLIES.
5. P.V.C. WATER MAIN SHALL CONFORM TO AWWA C900 SPECIFICATIONS.
6. DIELECTRIC FITTINGS ARE REQUIRED BETWEEN CURB STOP AND GALVANIZED STEEL PIPE SERVICE.
7. VALVE BOXES SHALL BE BROUGHT TO PROPER GRADE PRIOR TO ACCEPTANCE OF WORK.
8. METER AND R.P. VALVE SHALL BE INSTALLED BY A LICENSED PLUMBING CONTRACTOR.
9. THE INSIDE OF THE CURB BOX SHALL BE CLEANED SUCH THAT THE CURB STOP AND METER ARE ACCESSIBLE AND OPERATIONAL PRIOR TO ACCEPTANCE OF WORK.
10. CONCRETE SHALL BE CLASS 'B' – 5 SACK MIX.

Andrew Bonelli
CITY ENGINEER
PUBLIC WORKS DEPARTMENT
ENGINEERING DIVISION

May 2, 2003
PLAN APPROVAL DATE

REVISIONS:
OCT 2001
APRIL 2003

CITY OF REEDLEY

W-12

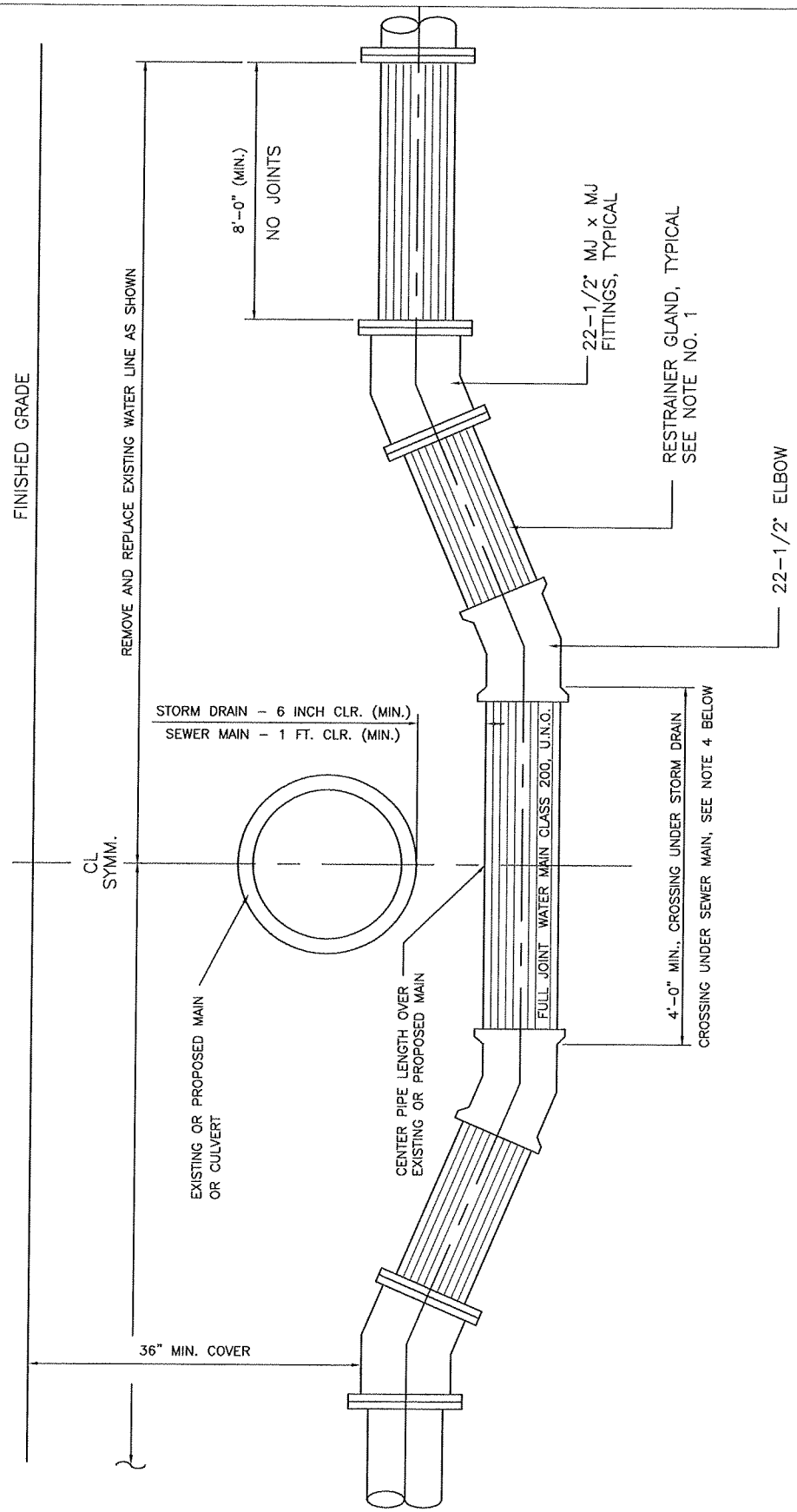

NOTES:

1. INSTALL RESTRAINER GLANDS AS SHOWN PER AWWA SPECIFICATION C600-87, MIN. 6-1/2" DIA. RESTRAINER. ENCASE IN 8 MIL. FILM.
2. SEE WATER MAIN STANDARDS, W-2A, W-4, W-6, W-7 FOR DETAILS NOT SHOWN.
3. DISINFECT AND TEST ASSEMBLY PRIOR TO REPLACING TRENCH PAVING.
4. REFER TO W-6 & W-7 FOR SPECIAL CONSTRUCTION REQUIREMENTS FOR SEWER AND WATER SEPARATION.
5. LOWERING WATER MAINS SHALL REQUIRE APPROVAL BY THE CITY ENGINEER.

NOT TO SCALE

REGISTERED PROFESSIONAL ENGINEER
BRUCE A. WEBBER
C043156
Exp. 3-31-2008
CIVIL
STATE OF CALIFORNIA

CONSTRUCTION REQUIREMENTS FOR LOWERING WATER MAINS	CITY ENGINEER PUBLIC WORKS DEPARTMENT ENGINEERING DIVISION	1-16-07 PLAN APPROVAL DATE
	REVISIONS: JAN. 12, 2007	CITY OF REEDLEY W-13

N:\AutoCad Drawing Files\Standard Plans\W-13.dwg

PLANT MATERIAL LEGEND (A)

SYMBOL	BOTANICAL NAME	COMMON NAME	SIZE	QUANTITY	REMARKS

IRRIGATION LEGEND (B)

SYMBOL	QUANTITY	MANUFACTURER	MODEL	HEAD TYPE	NOZ.	PATTERN	P.S.I.	G.P.M.	RAD/DIA	REMARKS

PLANT EQUIPMENT LEGEND (C)

SYMBOL	MANUFACTURER	MODEL	DESCRIPTION	SIZE	QUANTITY

LANDSCAPE AND IRRIGATION LEGENDS

CITY ENGINEER
PUBLIC WORKS DEPARTMENT

10-10-02
PLAN APPROVAL DATE

REVISIONS
Sept 2002

CITY OF REEDLEY

L-1

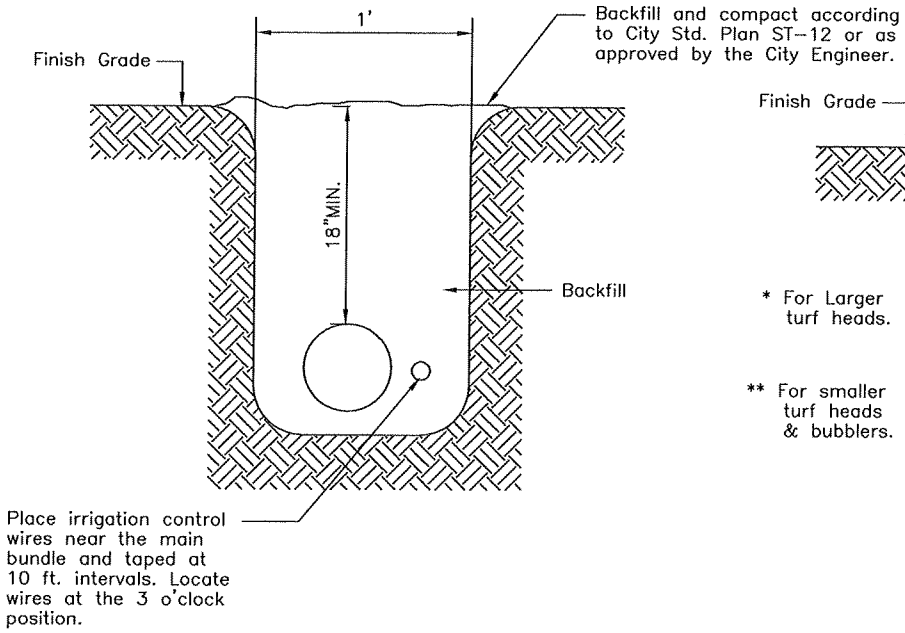

D MAIN LINE

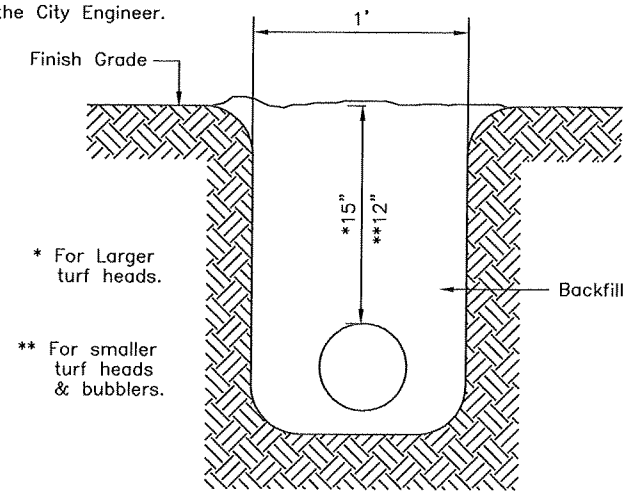

E LATERAL LINE

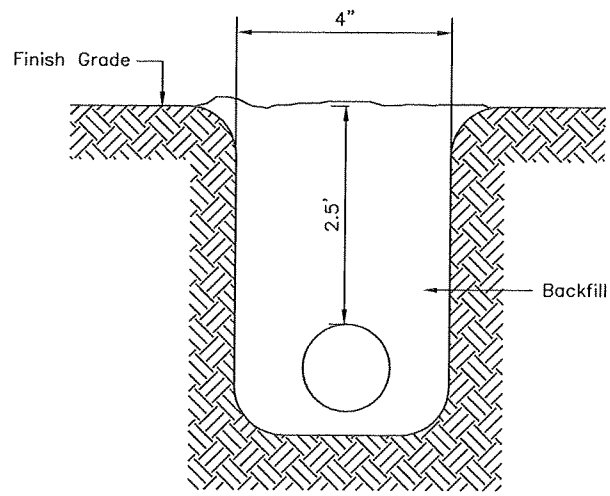

F ELECTRICAL CONDUIT

NOTES:

1. All electrical wiring and water lines shall be installed 2.5 ft. deep in a schedule 40 PVC conduit when crossing roadways or under any hard surface.

2. If more than one line is installed per trench, provide 0.5 ft. horizontal and vertical separation.

3. All PVC solvent (glue) shall be #711 (primer is required on main line only).

4. Landscape and irrigation improvements within the dedicated street right-of-way may require an encroachment permit. Check with Public Works Department for requirements.

5. Where open street cuts are required to install various irrigation and/or wires, all street patching within the City right-of-way shall be in accordance with City standard ST-12 or as directed by the City Engineer.

6. When there is a change in fitted direction, all irrigation main lines larger than 2" in diameter (pressure lines) shall be secured with thrust blocks in accordance with manufacturer's recommendation, City Std. W-4 and as directed by the City Engineer.

7. All irrigation lateral lines shall be schedule 40 PVC.

8. All irrigation main lines 2" in diameter and less shall be schedule 40 PVC. Irrigation main lines greater than 2" in diameter shall be Class 200 ring tite, PVC Schedule 40 or approved equal by the City Engineer.

9. Any and all changes shall be approved by the City Engineer prior to construction.

10. All irrigation installation shall be in accordance with City standards, the latest approved edition of the Uniform Plumbing Code, Manufacture's Recommendations and as directed by the City Engineer.

11. All material used shall be new and free from imperfections.

12. See approved landscape and irrigation plans and legends for specific model number, size, quantity, manufacturer, and performance requirements.

NOT TO SCALE

CONDUIT AND IRRIGATION PIPING TRENCHING AND BACKFILL

CITY ENGINEER
PUBLIC WORKS DEPARTMENT
ENGINEERING DIVISION

1-16-07
PLAN APPROVAL DATE

REVISIONS

JAN. 12, 2007

CITY OF REEDLEY

L-2

N:\AutoCad Drawing Files\Standard Plans\Landscape\L-2.dwg

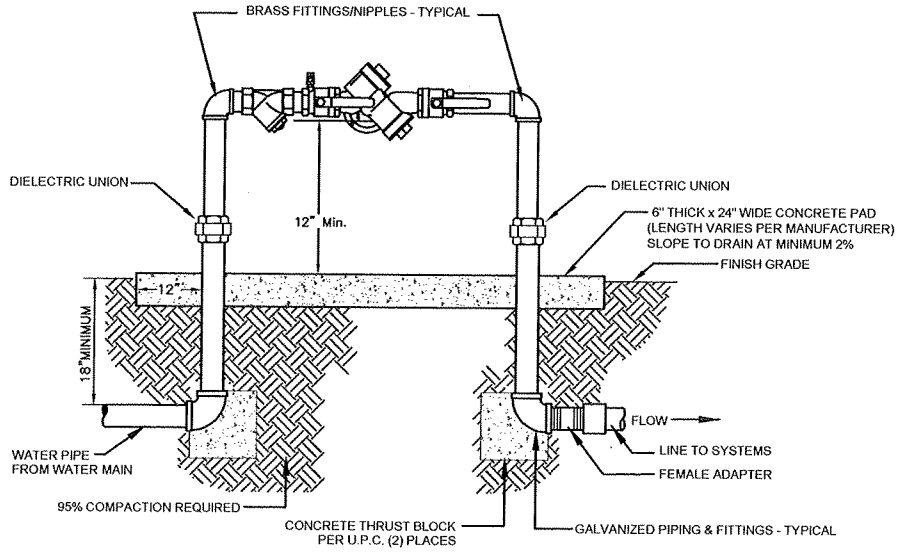

FEBCO MODEL 825Y

REDUCED PRESSURE ASSEMBLY

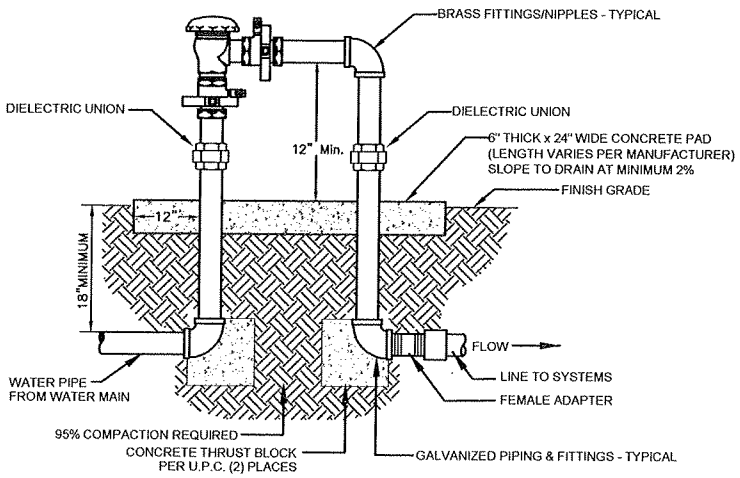

FEBCO MODEL 766

PRESSURE VACUUM BREAKER

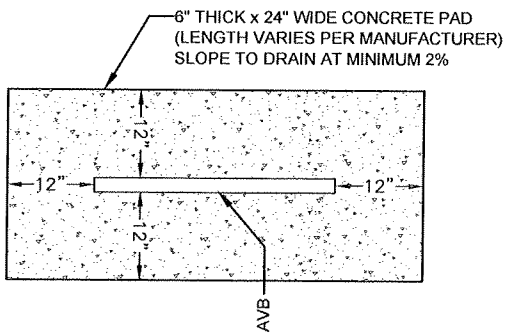

CONCRETE SLAB PLAN

REQUIRED ON ALL ASSEMBLIES

NOTES:

1. Except as noted, all piping and fittings shall be galvanized unless approved by the City Engineer.

2. Use teflon tape on all threaded joints or approved equal by the City Engineer.

3. All materials shall be new and free from imperfections.

4. For less than a 2" landscape service, if water pressure is not available a Febco 766 Pressure Vaccum Breaker may be utililized with approval by the City Engineer.

5. See approved landscape and irrigation plans and legends for specific model numbers, sizes, quantity, manufacturer's, and performance requirements.

6. All transitions from galvanized pipe to PVC shall be constructed with Schedule 40 female adapter or approved equal by the City Engineer.

7. A 6 ft. thick reinforced concrete slab is required for all water protection devices. Minimum clearance shall be 1 ft. on all sides of the device and as directed by the City Engineer.

8. All irrigation installation shall be in accordance with City standards, the latest accepted edition on the Uniform Plumbing Code, manufacture's recommendation, and as directed by the City Engineer.

9. Any and all changes shall be approved by the City Engineer before construction.

10. Before acceptance of work by the City, the backflow preventer shall be tested and certified by a licensed Backflow Plumber. Certification shall be delivered to the City Engineer.

REGISTERED PROFESSIONAL ENGINEER
BRUCE A. WEBBER
C043156
Exp. 3-31-2008
CIVIL
STATE OF CALIFORNIA

NOT TO SCALE

POTABLE WATER PROTECTION

CITY ENGINEER
PUBLIC WORKS DEPARTMENT
ENGINEERING DIVISION

1-25-07
PLAN APPROVAL DATE

REVISIONS

JAN. 2007

CITY OF REEDLEY

L-3

N:\AutoCad Drawing Files\Standard Plans\Landscape\L-3.dwg

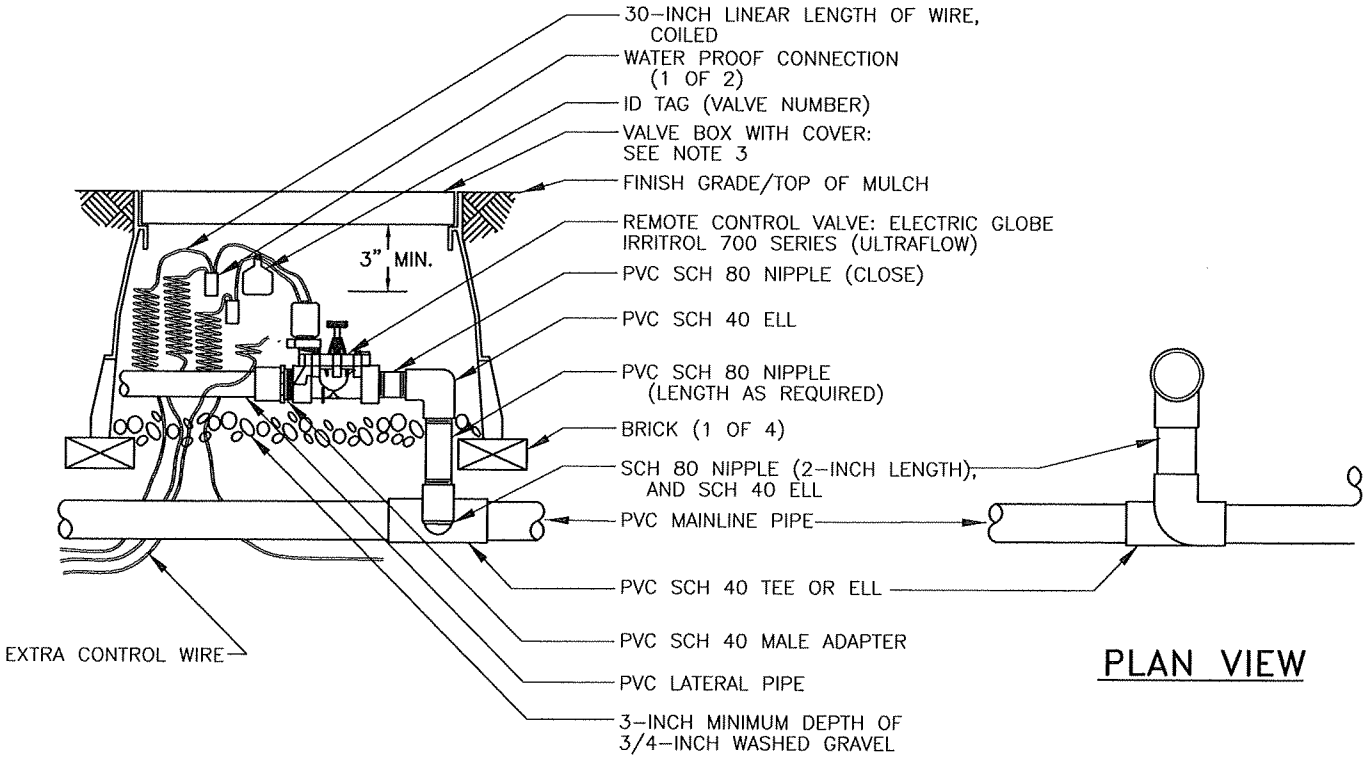

REMOTE CONTROL VALVE

18 GAUGE	–	MAX 1,000 L.F.
16 GAUGE	–	MAX 1,500 L.F.
14 GAUGE	–	MAX 2,400 L.F.
12 GAUGE	–	MAX 3,800 L.F.

CONTROL WIRE SIZING CHART

NOTES:

1. Use teflon tape on all threaded joints or approved equal by City Engineer.

2. All nipples shall be Schedule 80 PVC. All fittings shall be Schedule 40 PVC.

3. All irrigation control valves shall be placed in a plastic irrigation control valve box with top of valve box 2-inches below finished grade in turf and 2-inches above finished grade in planter area. The following plastic valve box and lid are deemed acceptable. Any deviation from the accepted box and lid below must be approved by the City Engineer.

   Christy FL9T Fibrelyte Lid
   FL9 Fibrelyte Box

4. Installation of extra irrigation control wire from irrigation control clock to remove control valve is required for each manifold (bundle of valves). Extra wire shall be a different color than the one used to operate valves.

5. All irrigation control wires (control and common) shall be U.L. single strand copper wire, taped and bundled at 10 ft. intervals and placed near the irrigation mainline at 3 o'clock position.

6. All wire connections shall be waterproof and approved by the City Engineer. Splices will not be allowed unless approved by the City Engineer. The approved splices will require the use of a splice box.

7. Maintain 2 ft. separation between remote control valves (centerline to centerline) when more than one valve is installed in the same location.

8. Where possible, locate valves in the planter areas.

9. All irrigation installations shall be in accordance with City standards, the latest approved edition of the Uniform Plumbing Code, manufacturer's recommendations, and as directed by the City Engineer.

10. All materials used shall be new and free from defects.

11. Any and all changes shall be approved by the City Engineer prior to construction.

12. See approved landscape plans and legends for specific model numbers, size, quantity, manufacturer's and performance requirements.

REGISTERED PROFESSIONAL ENGINEER
BRUCE A. WEBBER
C043156
Exp. 3-31-2008
CIVIL
STATE OF CALIFORNIA

NOT TO SCALE

REMOTE CONTROL VALVES	CITY ENGINEER PUBLIC WORKS DEPARTMENT ENGINEERING DIVISION	1-16-07 PLAN APPROVAL DATE
	REVISIONS JAN. 16, 2007 DRAWN BY: C. TAMEZ	CITY OF REEDLEY L-4

N:\AutoCad Drawing Files\Standard Plans\Landscape\L-4.dwg

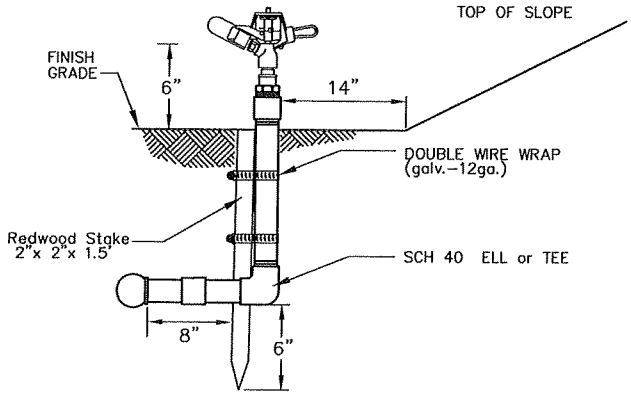

(Y) OSCILLATING HEAD DETAIL

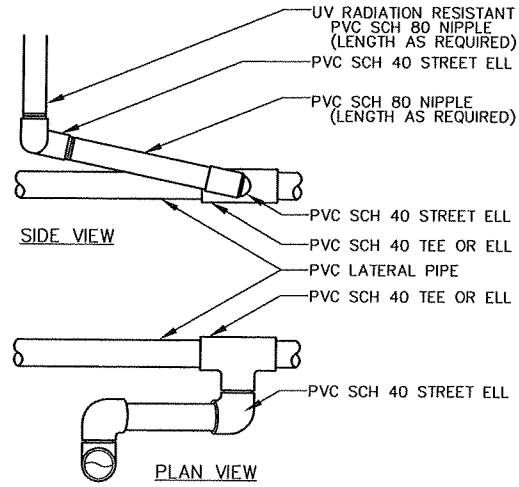

(Z) TRIPLE SWING JOINT DETAIL

NOTES:

1. Use teflon tape on all threaded joints or approved equal by City Engineer.

2. All risers and nipples shall be schedule 80 PVC sized as required.

3. All fittings shall be Schedule 40 PVC sized as required on the plans.

4. Where irrigation heads are installed within embankments, a drain valve or check valve is required to prevent erosion. Check valves and drain valves shall be installed at locations as prescribed by the specific field conditions and shall be approved by the City Engineer prior to use and placement.

5. Use Schedule 80 PVC conduit within enclosed pedestal, slope conduit to drain 1/8–inch per 1 ft.

6. Construct 6" Class 'B' concrete slab as required to receive the pedestal mounted irrigation control clock. Compact 6" base to 95% relative density prior to placement of concrete slab.

7. Where part circle irrigation heads adjacent to a building wall, locate irrigation head 4–inches from face of building wall to back of irrigation head.

8. All irrigation heads shall provide 100% coverage with no over spray onto sidewalks, street, walls, and buildings. Addition of heads may be required at any time in order to achieve 100% coverage.

9. All irrigation installation shall be in accordance with City standards, the latest edition of the Uniform Plumbing Code, manufacturer's recommendation and as directed by the City Engineer.

10. All materials shall be new and free from defects.

11. See approved landscape/irrigation plans and legends for specific model numbers, size, quantities, manufacturer's, and performance requirements.

12. Any and all changes from this standard shall be approved by the City Engineer prior to any type of construction.

13. Controller to be properly grounded per National Electrical Code, Article 250, and local regulations.

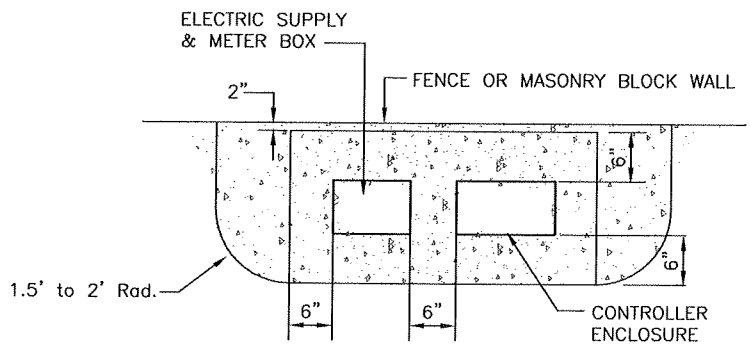

PLAN VIEW

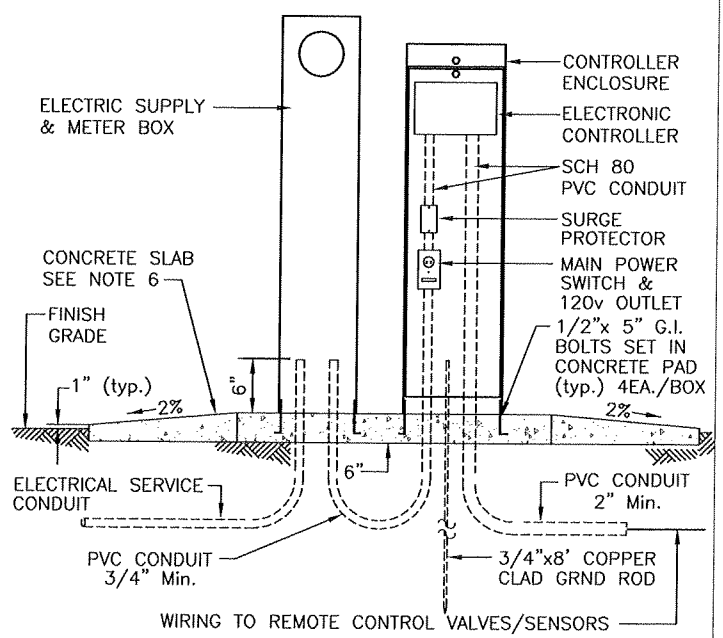

(X) ELECTRIC CONTROLLER & SERVICE

TORO SENTINEL FIELD SATELLITE / MAPTO UNIVERSAL CONTROLLER, PEDESTAL MOUNTED TOP ENTRY STAINLESS STEEL CABINET ENCLOSURE.

NOT TO SCALE

ELECTRIC CONTROLLER & SERVICE OSCILLATING HEAD AND TRIPLE SWING JOINT	CITY ENGINEER PUBLIC WORKS DEPARTMENT ENGINEERING DIVISION	1-25-07 PLAN APPROVAL DATE
	REVISIONS JAN. 2007	CITY OF REEDLEY L–5

N:\AutoCad Drawing Files\Standard Plans\Landscape\L-5.dwg

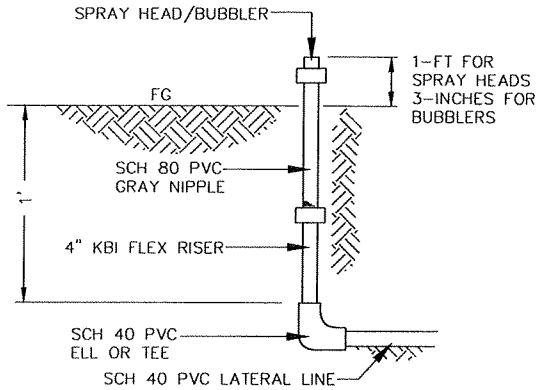

(A) BUBBLER/SHRUB SPRAY HEAD

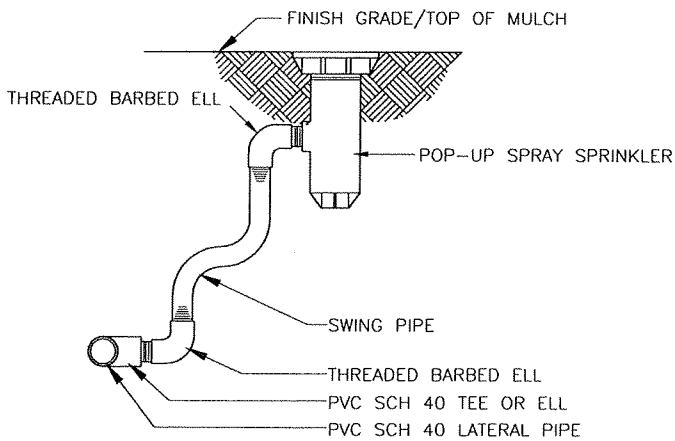

(B) SWING PIPE

NOTES:

1. Use teflon tape tape on all threaded joints or approved equal by City Engineer.

2. All risers and nipples shall be Schedule 80 PVC.

3. All fittings shall be Schedule 40 PVC.

4. All laterals shall be Schedule 40 PVC or as noted on the landscape/irrigation plans.

5. Where irrigation heads are installed within embankments, a drain valve or check valve is required to prevent erosion. Check valves and drain valves shall be installed at locations as prescribed by the specific field conditions and shall be approved by the City Engineer prior to use and placement.

6. All pop-up heads shall be 1-inch from concrete and asphalt areas. All large radius irrigation heads (part circle) shall be 4-inches from concrete and asphalt areas. Height of pop-up heads shall be as follows:
   4-inches for lawn areas
   1 foot for shrubs
   1 foot for ground covers

7. Where part circle irrigation heads adjacent to a building wall, locate irrigation head 1 ft. from face of building wall to back of irrigation head.

8. Where triple swing joint is required, see Standard Plan L-5, Detail Z. Swing joints shall be allowed on all irrigation heads even where not required. As an alternate, Rainbird SA Series - Swing Assembly may be used with approval from City Engineer.

9. All irrigation installation shall be in accordance with City standards, the latest edition of the Uniform Plumbing Code, manufacturer's recommendation and as directed by the City Engineer.

10. All materials shall be new and free from defects.

11. See approved landscape/irrigation plans and legends for specific model numbers, size, quantities, manufacturer's, and performance requirements.

12. Any and all changes from this standard shall be approved by the City Engineer prior to any type of construction.

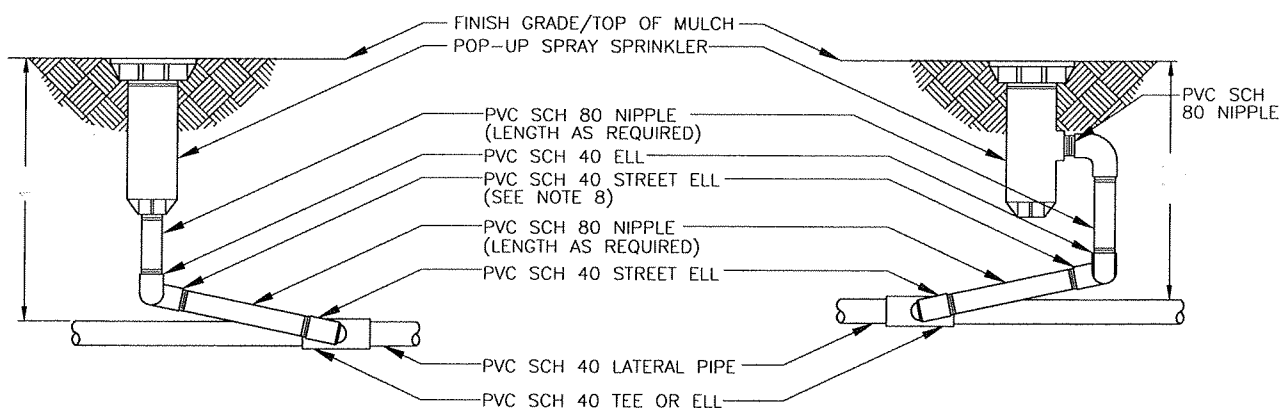

(C) POP-UP SPRAY HEAD
(Bottom Mounted)

(D) POP-UP SPRAY HEAD
(Side Mounted)

NOT TO SCALE

VARIOUS IRRIGATION HEADS	Andrew J Benelli CITY ENGINEER PUBLIC WORKS DEPARTMENT	10-10-02 PLAN APPROVAL DATE
	REVISIONS Sept 2002	CITY OF REEDLEY L-6

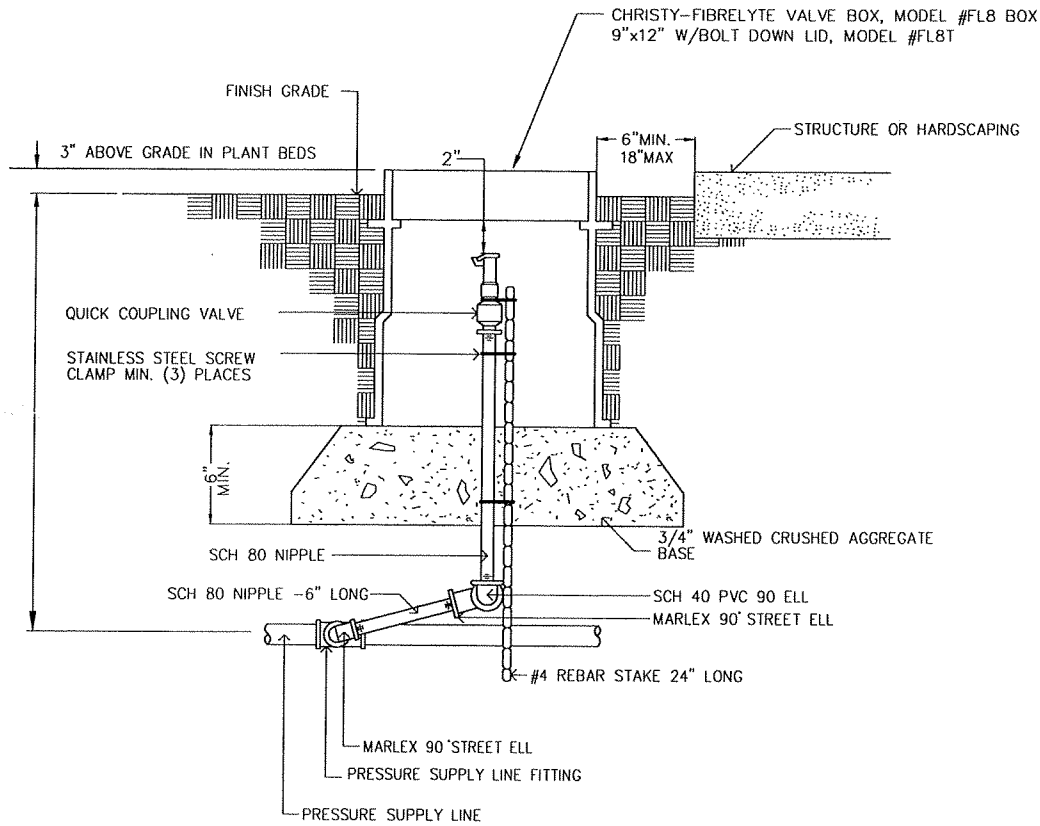

NOTE:

1. PLACE AGGREGATE PRIOR TO INSTALLATION OF VALVE BOX.

(W) QUICK COUPLER

NOTES:

1. Use teflon tape tape on all threaded joints or as approved by City Engineer.

2. All risers and nipples shall be Schedule 80 PVC.

3. All fittings shall be Schedule 40 PVC.

4. All laterals shall be Schedule 40 PVC or as noted on the landscape/irrigation plans.

5. All irrigation installation shall be in accordance with City standards, the latest edition of the Uniform Plumbing Code, manufacturer's recommendation and as directed by the City Engineer.

6. All materials shall be new and free from defects.

7. See approved landscape/irrigation plans and legends for specific model numbers, size, quantities, manufacturer's, and performance requirements.

8. Any and all changes from this standard shall be approved by the City Engineer prior to any type of construction.

NOT TO SCALE

QUICK COUPLER VALVE DETAIL	Andrew J. Benetti CITY ENGINEER PUBLIC WORKS DEPARTMENT	10-10-02 PLAN APPROVAL DATE
	REVISIONS Sept 2002	CITY OF REEDLEY L-7

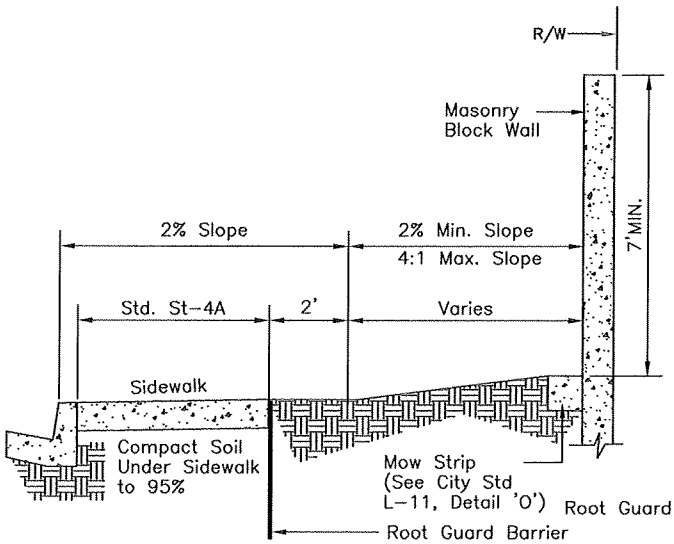

(F) **PARKWAY SECTION**
MONOLITHIC CURB, GUTTER AND SIDEWALK

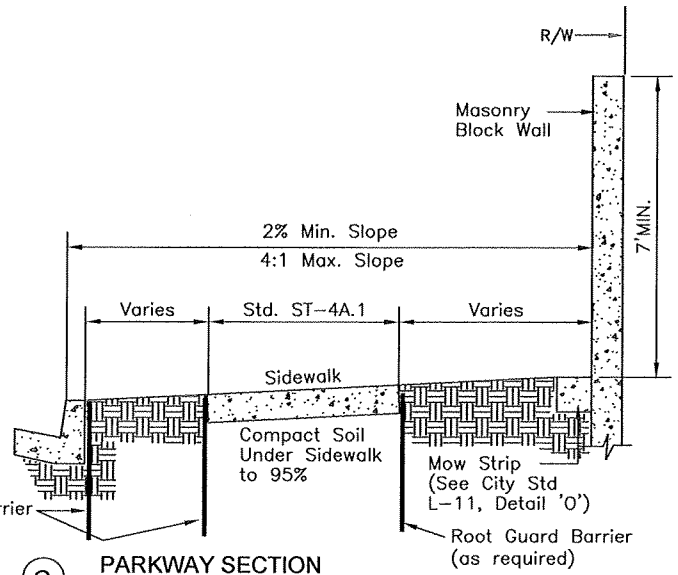

(G) **PARKWAY SECTION**
LANDSCAPE STRIPS, MEANDERING SIDEWALK

MASONRY BLOCK WALL MUST BE DESIGNED BY A QUALIFIED ENGINEER AND DESIGN SUBMITTED TO THE CITY ENGINEER FOR REVIEW AND APPROVAL

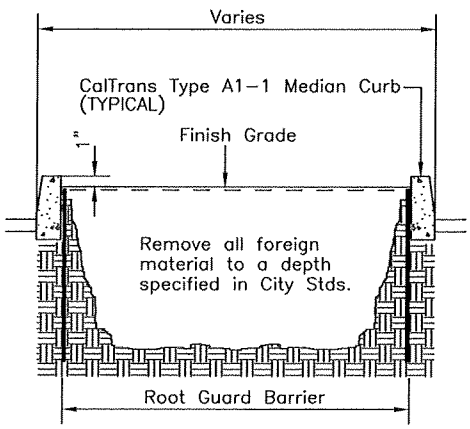

(H) **MEDIAN SECTION**

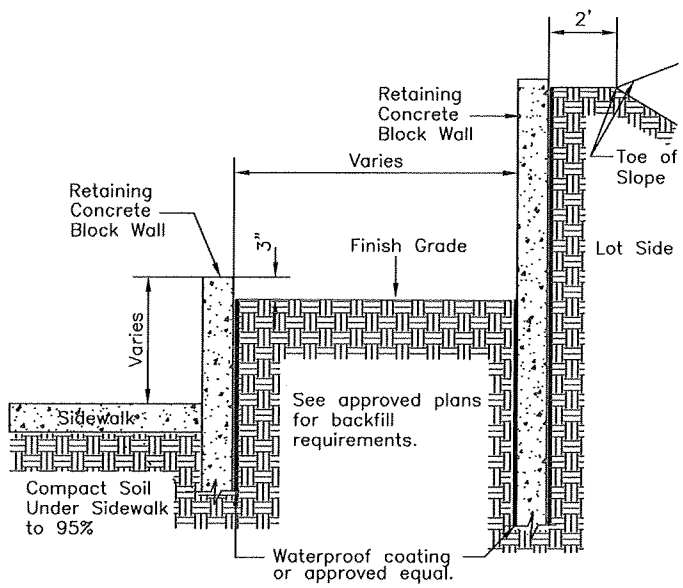

(I) **WATER PROOFING**
(PLANTERS AND RETAINING WALLS)

ALL RETAINING WALLS MUST BE ENGINEERED AND CALCULATIONS SUBMITTED TO CITY ENGINEER FOR REVIEW AND APPROVAL.

NOTES:

1. Provide positive drainage (2% minimum to 4% maximum) in all landfill areas.

2. 9-inch concrete mow strip is required for all lawn areas adjacent to proposed or existing wall per Standard Plan L-11, Detail 'O'.

3. Where lot grades are higher than street grades, side of wall water proofing is required per Standard Plan L-8, Detail 'I'.

4. If curbing and or curb/gutter for landscape center medians are not existing, see approved civil engineering drawings.

5. All irrigation installation shall be in accordance with City Standards, the latest edition of the Uniform Plumbing Code, manufacturer's recommendation and as directed by the City Engineer.

6. Any and all changes from this standard shall be approved by the City Engineer prior to any type of construction.

NOT TO SCALE

CITY ENGINEER
PUBLIC WORKS DEPARTMENT
ENGINEERING DIVISION

1-25-07
PLAN APPROVAL DATE

PARKWAY AND MEDIAN SECTION DETAILS

REVISIONS
JAN. 2007

CITY OF REEDLEY
L-8

N:\AutoCad Drawing Files\Standard Plans\Landscape\L-8.dwg

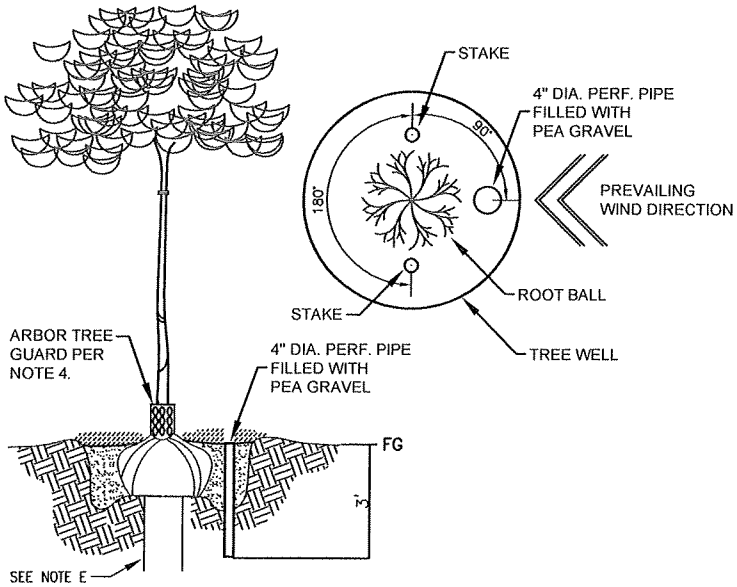

TURF AREAS
NO BUBBLERS

(J) TREE IRRIGATION

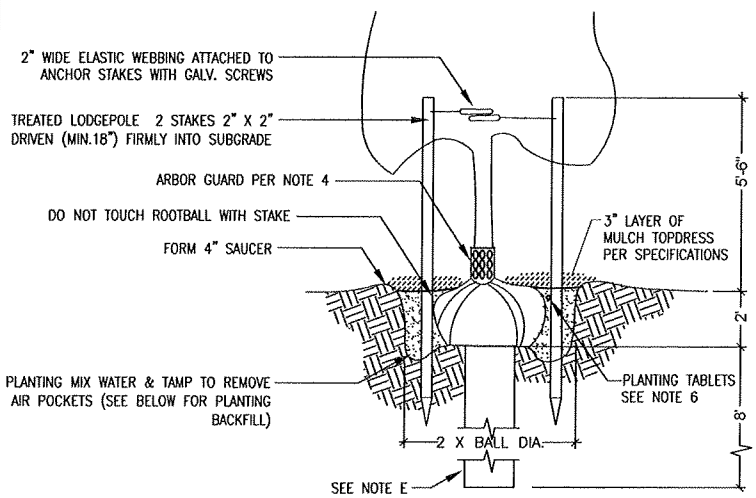

A. TOP SUPPORT OF TREES SHOULD BE AS LOW ON THE TRUNK AS POSSIBLE BUT HIGH ENOUGH THAT THE TREE WILL RETURN TO UPRIGHT AFTER DEFLECTION. TO FIND THE PROPER HEIGHT, HOLD THE TRUNK IN ONE HAND, PULL THE TOP TO ONE SIDE AND RELEASE. THE HEIGHT AT WHICH THE TRUNK WILL JUST RETURN TO UPRIGHT WHEN THE TOP IS RELEASED IS THE HEIGHT AT WHICH TO ATTACH THE TIES.

B. TOP-MOST LOOP IS TIED FIRST TO HOLD THE TRUNK IN THE DESIRED POSITION. THE LOWER TIE IS THEN SECURED TO MAINTAIN THE TRUNK FIRMLY IN THE UPPER LOOP.

C. PLANT SO THAT TOP OF ROOT BALL IS EVEN WITH THE FINISHED GRADE.

D. PLANTING BACKFILL MIX SHALL CONSIST OF 60% NATIVE SOIL & 40% NITROLIZED WOOD SHAVINGS.

E. THE CONTRACTOR SHALL DRILL A 12" DIA x 8' DEEP HOLE AT THE BOTTOM OF EACH PLANTING PIT, PENETRATING THROUGH THE HARDPAN AND FILL WITH SAND.

(K) TREE PLANTING AND STAKING

NOTES:

1. Apply soil amendment as per soil test.

2. All trees shall be staked with new 2-inch diameter (pressure treated) Lodge Pole Pine. Remove original tree stakes from all plant material delivered to the project site and install new tree stakes.

3. Construct mound as required to secure plants stability during construction installation.

4. Arbor tree guard or approved equal is required around all tree trunks planted in lawn areas.

5. Root Guard barrier is required on all hard surfaces when the tree trunk is 5 ft. or less from any hard surface. Place barrier parallel along the edge of hard surface.

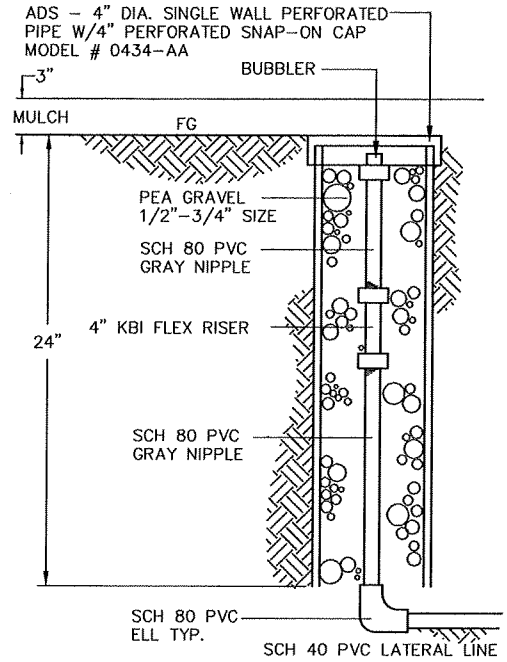

(L) TREE BUBBLER ASSEMBLY

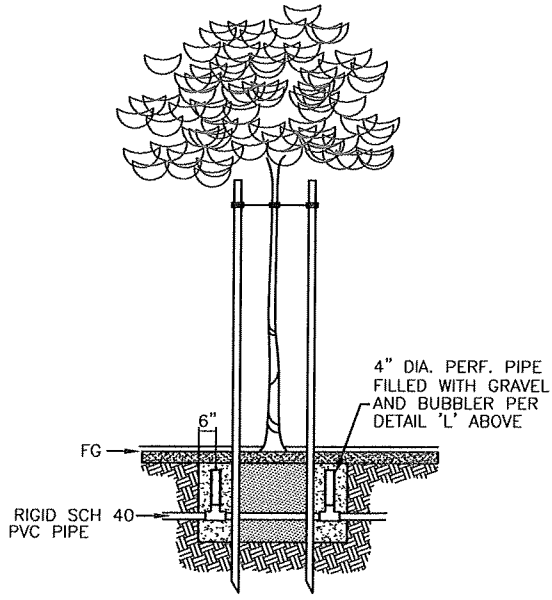

TREES LOCATED IN LANDSCAPED AREAS REQUIRE ONLY 1 BUBBLER. TREES LOCATED IN TURF AREAS DO NOT REQUIRE BUBBLERS.

(M) TREE BUBBLER IN TREE WELL

6. Planting tablet shall be placed 2-inches below finished grade near root foundation as follows:
   - 1 - Tablet per 1 Gal.
   - 3 - Tablets per 5 Gal.
   - 6 - Tablets per 15 Gal.
   - 9 - Tablets per 24-inch Box

7. Any and all deviations from this standard shall be approved by the City Engineer prior to construction.

8. All landscape tree planting and installation shall be in accordance with City Standard Specifications, Section 21 and as directed by the City Engineer.

NOT TO SCALE

TREE PLANTING AND IRRIGATION DETAILS	CITY ENGINEER PUBLIC WORKS DEPARTMENT	1-25-07 PLAN APPROVAL DATE
	REVISIONS: JAN. 2007	CITY OF REEDLEY
	DRAWN BY: C.TAMEZ	L-9A

N:\AutoCad Drawing Files\Standard Plans\Landscape\L-9A.dwg

NOTES:

1. Apply soil amendment as per soil test.

2. Construct mound as required to secure plants stability during construction installation.

3. Planting tablet shall be placed 2–inches below finished grade near root foundation as follows:
   - 1 – Tablet per 1 Gal.
   - 3 – Tablets per 5 Gal.
   - 6 – Tablets per 15 Gal.
   - 9 – Tablets per 24–inch Box

4. Any and all deviations from this standard shall be approved by the City Engineer prior to construction.

5. All landscape planting and installation shall be in accordance with approved specific landscape irrigation construction plans, and as directed by the City Engineer.

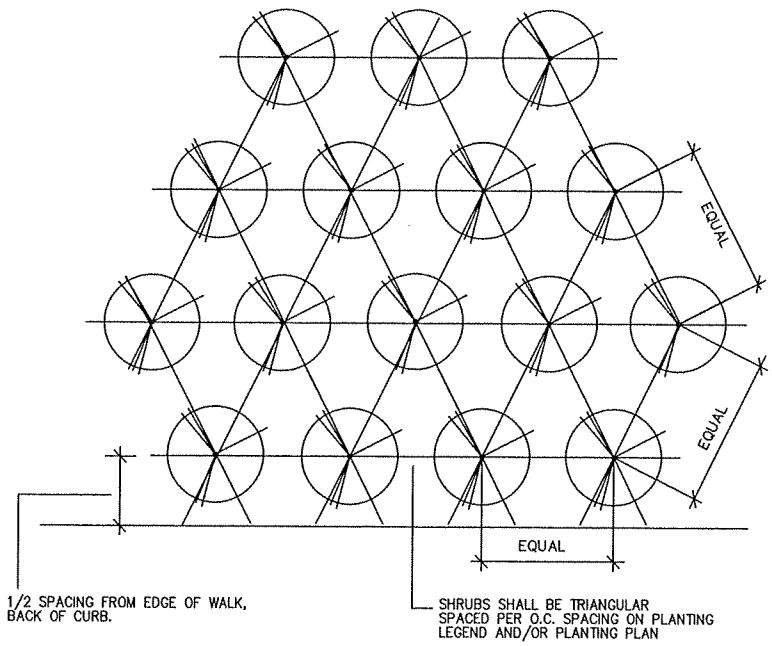

(P) SHRUB SPACING

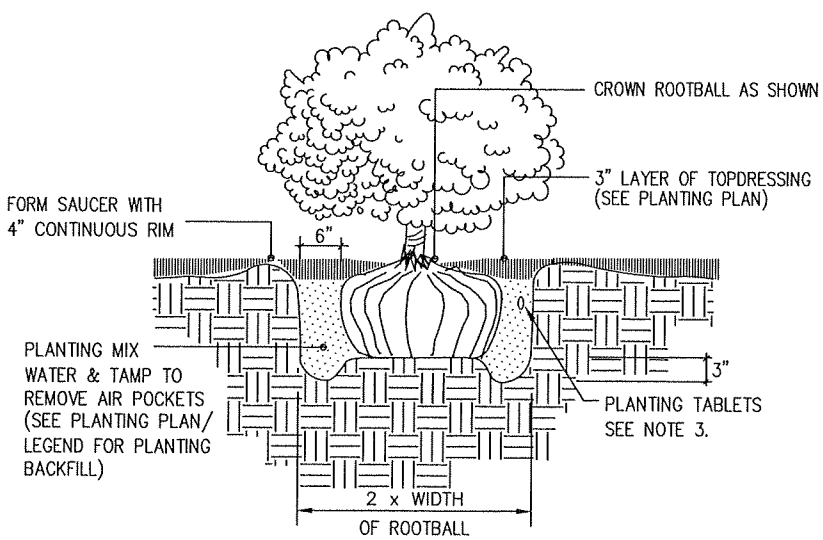

(Q) SHRUB PLANTING

NOT TO SCALE

SHRUB PLANTING AND IRRIGATION DETAILS	CITY ENGINEER PUBLIC WORKS DEPARTMENT	10-10-02 PLAN APPROVAL DATE
	REVISIONS Sept 2002	CITY OF REEDLEY L–9B

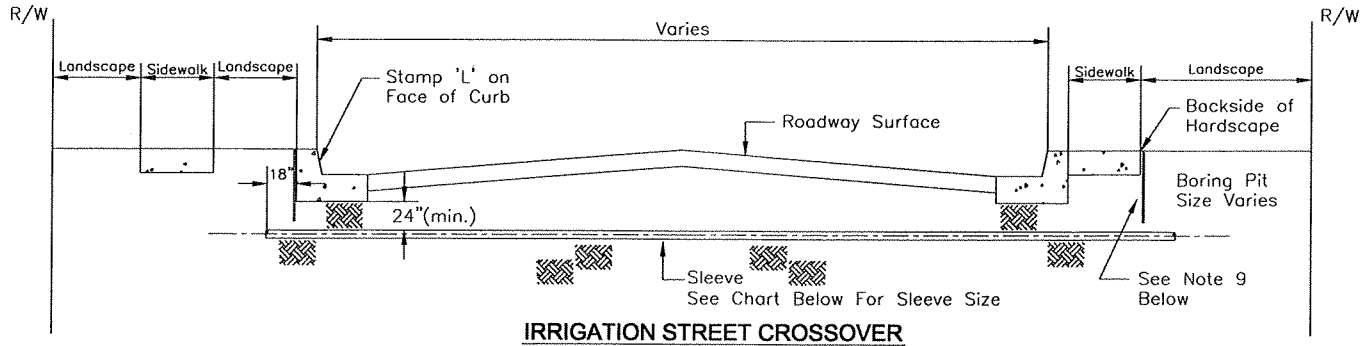

IRRIGATION STREET CROSSOVER

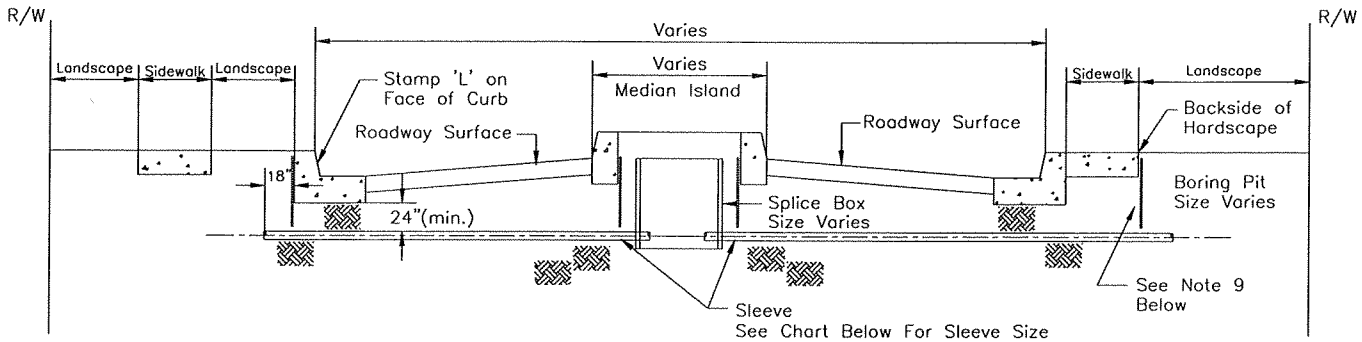

IRRIGATION STREET CROSSOVER WITH LANDSCAPE MEDIAN

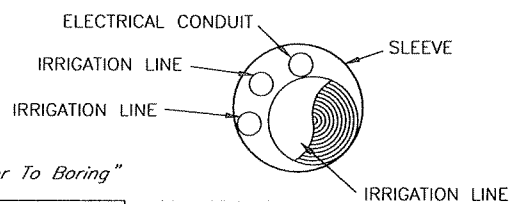

MORE THAN ONE PIPE PER SLEEVE

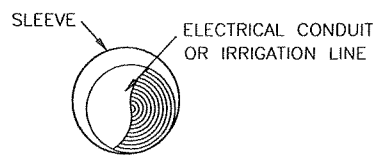

ONE PIPE PER SLEEVE

"Contractor Shall Contact Utility Companies Prior To Boring"

IRRIGATION SLEEVE CHART

INCREASE SLEEVE SIZE AS REQUIRED PER THIS CHART FOR MORE THAN ONE PIPE PER SLEEVE

PVC PIPE SIZE	SLEEVE SIZE		
	UNDER 18 Ft.	OVER 18 Ft. UNDER 28 Ft.	OVER 28 Ft.
1/2"	1"	1-1/4"	1-1/2"
3/4"	1-1/4"	1-1/2"	2"
1"	1-1/2"	2"	2"
1"-1/4"	2"	2-1/2"	2-1/2"
1"-1/2"	2-1/2"	2-1/2"	3"
2"	3"	3"	3"
2-1/2"	3"	3"	4"
3"	4"	5"	5"
3-1/2"	5"	5"	6"
4"	5"	6"	6"
5"	6"	8"	8"
6"	8"	8"	8"

NOTES:

1. All piping and fittings shall be Schedule 40 PVC unless approved equal by the City Engineer.

2. Where conduit (sleeve only) is installed, one pull wire or rope shall be installed. The lenght of wire or rope shall extend 6 ft. pass each end of the conduit. Each conduit (sleeve) shall be capped at each end.

3. All material used shall be new and free from imperfections.

4. See approved landscape/irrigation plans and legends for specific model numbers, size, manufacturer's, and performance requirements.

5. All transitions from galvanized pipe to PVC shall be constructed with Schedule 40 female adapter or approved equal by the City Engineer.

6. All irrigation installation shall be in accordance with City Standards, the latest edition of the Uniform Plumbing Code, manufacturer's recommendations, and as directed by the City Engineer.

7. Verify all measurements and specific site conditions in the field.

8. Route pipe(s) as required as per approved landscape/irrigation plans.

9. Install 2"x4"x24" redwood stakes at each end of sleeve at hardscape. Top of redwood stake 1-inch below top of hardscape.

10. The method used for boring shall be reviewed and approved by the City Engineer prior to start of operation.

11. Any and all changes shall be approved by the City Engineer prior to construction.

NOT TO SCALE

IRRIGATION SLEEVEND(S) DETAIL

Andrew J. Benetti
CITY ENGINEER
PUBLIC WORKS DEPARTMENT

10-10-02
PLAN APPROVAL DATE

REVISIONS
Sept 2002

CITY OF REEDLEY
L-10

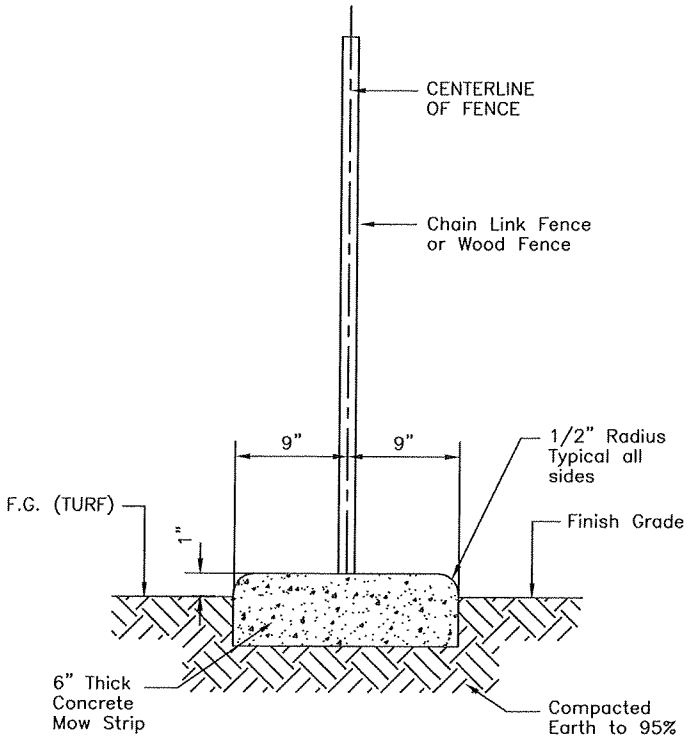

N MOW STRIP AT CHAIN LINK FENCE AND WOOD FENCE

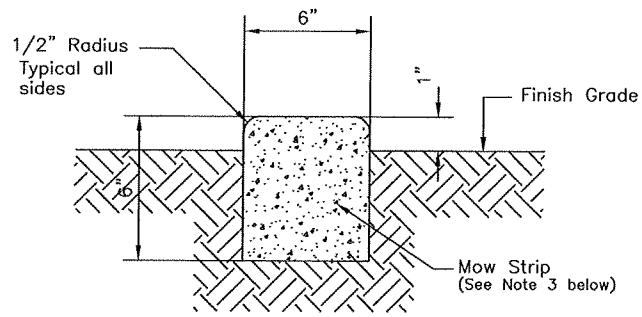

P CONCRETE MOW STRIP

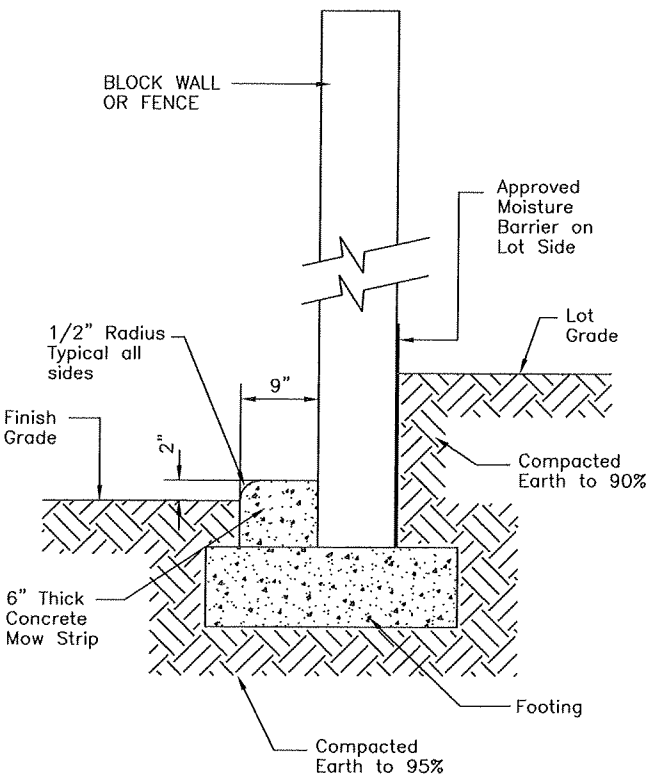

O MOW STRIP AT WALL AND FENCE

NOTES:

1. Construct a deep score expansion joint at every fence post and every 15 ft. on all concrete surfaces.

2. All areas to receive concrete shall be compacted to 90% relative density for a depth of 0.5 ft. as as approved by the City Engineer.

3. Top of mow strip shall be 1–inch above finished grade when adjacent to turf and 2–inches above finished grade when adjacent to planter.

4. Where the grade on the lot side of the wall is higher than the grade on the street side of the wall, water proofing is required. See Standard Plan L–8, Detail 11 for water proofing requirements.

5. Any and all changes from this standard detail sheet shall be approved by the City Engineer prior to construction.

6. All concrete shall be Class 'B' in accordance with Section 16 of the City Standard Specifications and as approved by the City Engineer.

NOT TO SCALE

CITY ENGINEER
PUBLIC WORKS DEPARTMENT
ENGINEERING DIVISION

1-25-07
PLAN APPROVAL DATE

CONCRETE MOW STRIP DETAILS

REVISIONS

JAN. 2007

CITY OF REEDLEY

L–11

N:\AutoCad Drawing Files\Standard Plans\Landscpe\L-11.dwg

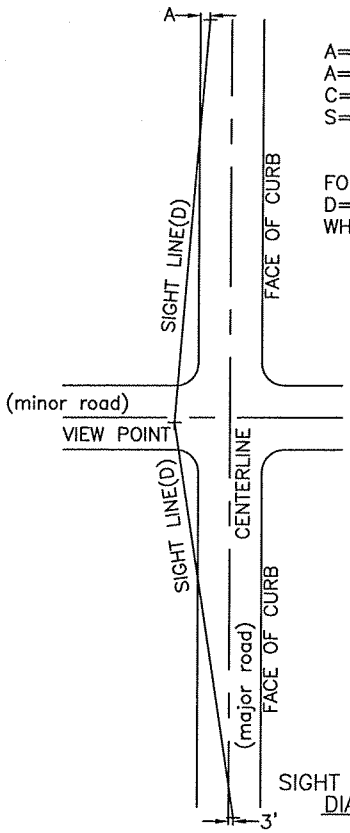

A=12' WITH PARKING
A= 6' WITHOUT PARKING
C=10-FEET/MPH
S=CRITICAL SPEED-85th PERCENTILE(MPH)
OR IF NOT KNOWN, DESIGN SPEED ON THRU STREET PER TABLE BELOW
FORMULA:
D=SxC
WHERE, D=SIGHT DISTANCE(FT)

SIGHT DISTANCE DIAGRAM

DESIGN SPEEDS TABLE		
LOCAL STREET	57-60' R/W	25 MPH
MAJOR COLLECTOR	84' R/W	45 MPH
MAJOR ARTERIAL	110' R/W	55 MPH

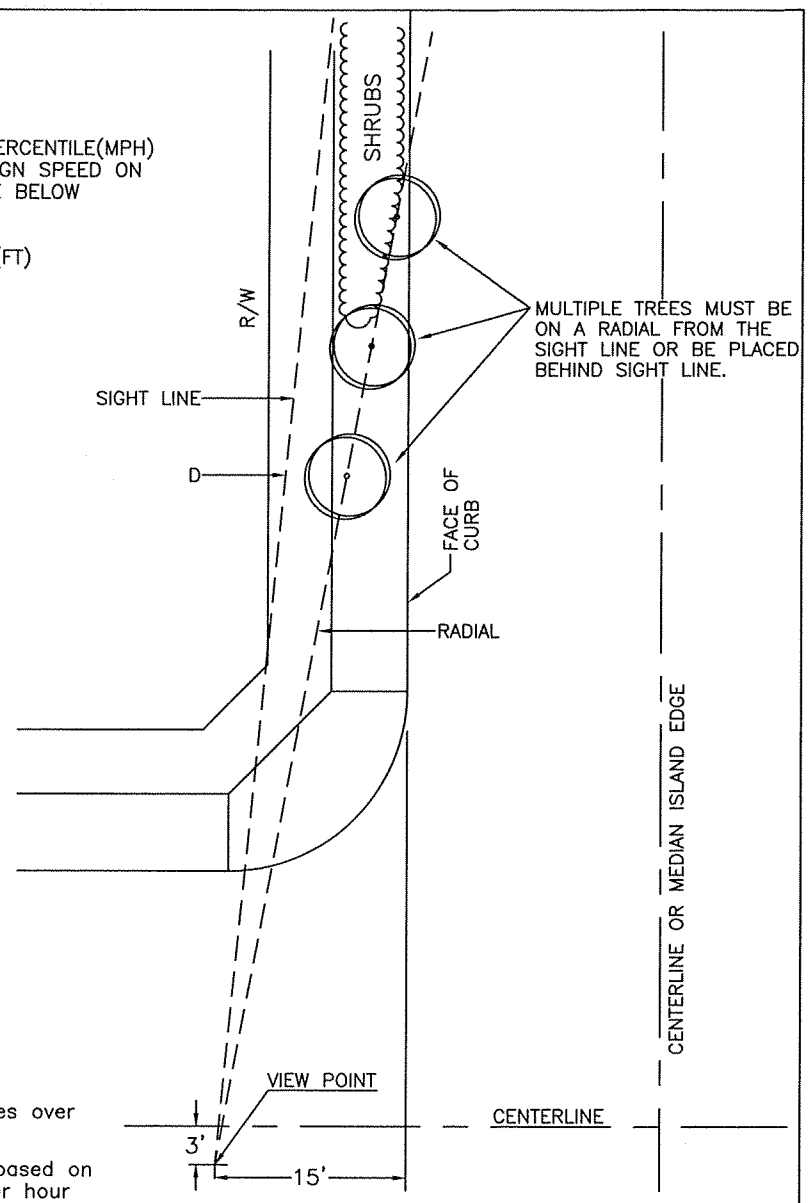

LEFT SIDE DETAIL

NOTES:

1. Trees and shrubs within sight line and tree canopies over sidewalks shall conform to the detail below.

2. Sight distance at controlled intersections shall be based on a sight distance equal to design speed(s) in miles per hour multiplied by a factor of 10. See Design Speeds Table for various street classifications.

3. Corner sight distance is measured from a point on the minor road 15' from the edge of the major road pavement, and 3' right of the left edge of the lane under consideration. Said point is viewed from a height of 3.5' on the minor road to a height of 4.25' on the major road.

4. The location of the object to the left is 12' from the nearest edge of the major road (6' with parking prohibited). Parking shall be assumed to be prohibited on major arterial streets or as directed by the City Engineer.

5. The location of the object to the right is to be measured at 1/2 the major road width plus 3' from the nearest edge of the major street.

6. Landscaping over 3' in height above top of curb shall not be placed within the line of sight. All landscaping must be maintained at a height of 3' or less with the exception of trees.

7. Trees are permitted in the line of sight for controlled intersections provided that the skirt height (bottom of foliage) is maintained 8' above the adjacent top of curb. In the event more than 1 tree is placed in the sight line area they must be placed on a radial from the view point.

8. Any and all changes from this standard shall be designed by a traffic engineer and submitted to the City Engineer for review and approval prior to any type of construction.

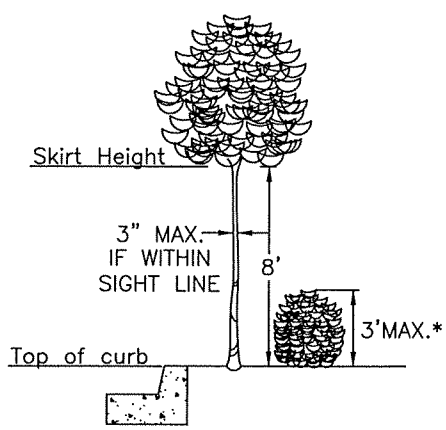

* Measure from top of curb for solid objects, i.e. fences, walls, etc.

TREE HEIGHT DETAIL

NOT TO SCALE

TYPICAL SIGHT DISTANCE REQUIREMENTS FOR CONTROLLED INTERSECTION WITH LANDSCAPING

Andrew J. Benelli
CITY ENGINEER
PUBLIC WORKS DEPARTMENT

Oct 28, 02
PLAN APPROVAL DATE

REVISIONS
Sept 2002

CITY OF REEDLEY
L-12

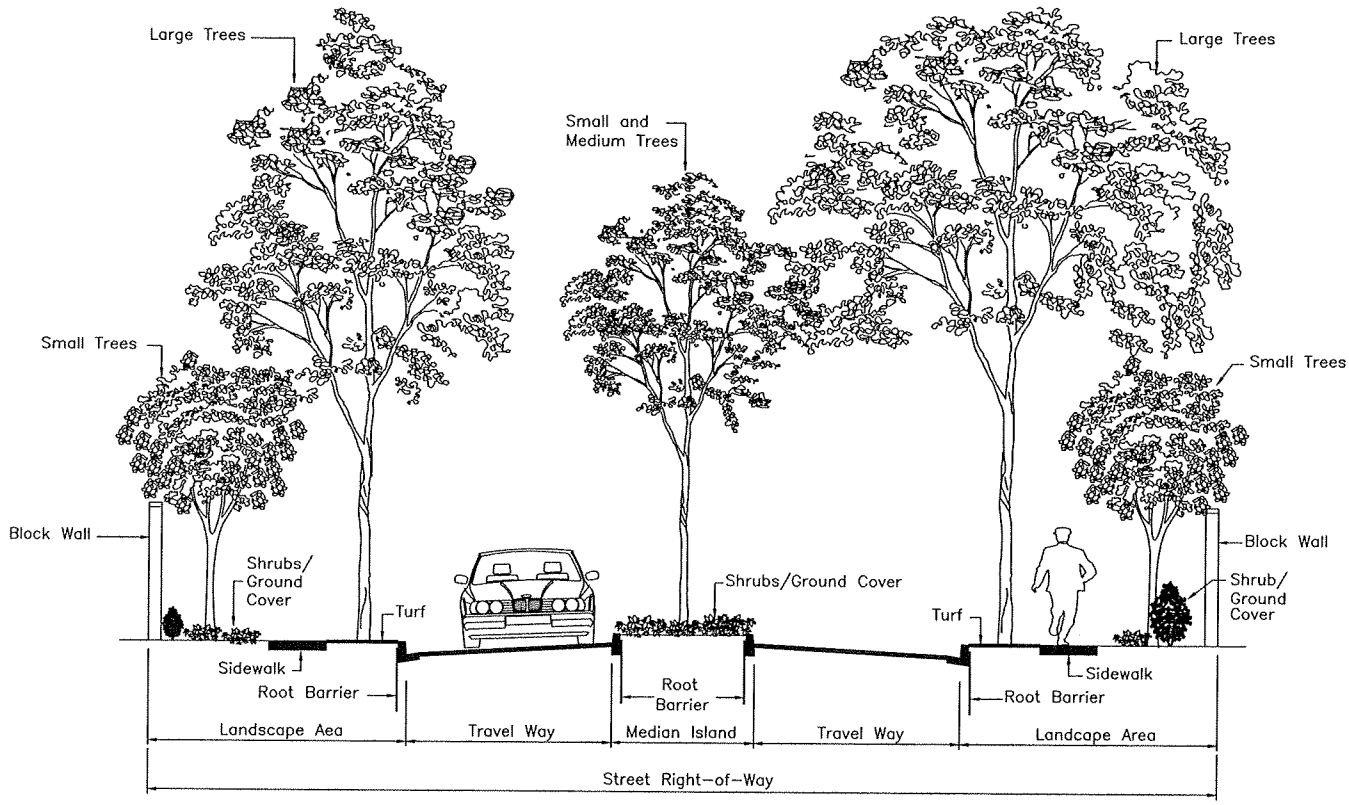

Landscaping shall be provided on major arterial streets and major collector streets on which is placed a requirement for construction of masonry block walls, median islands, or other such areas as required by the Planning Commision of the City of Reedley.

Major arterial streets will require a landscape area with a minimum width of 21 feet including the masonry block wall behind the City standard sidewalk.

Major collector streets will require a landscaped area with a minimum width of 17 feet including the width of the masonry block wall behind the City standard sidewalk.

NOT TO SCALE

LANDSCAPING ON MAJOR ARTERIALS AND MAJOR COLLECTOR STREETS	Andrew J. Benelli CITY ENGINEER PUBLIC WORKS DEPARTMENT	10-17-02 PLAN APPROVAL DATE
	REVISIONS Sept 2002	CITY OF REEDLEY L-13A

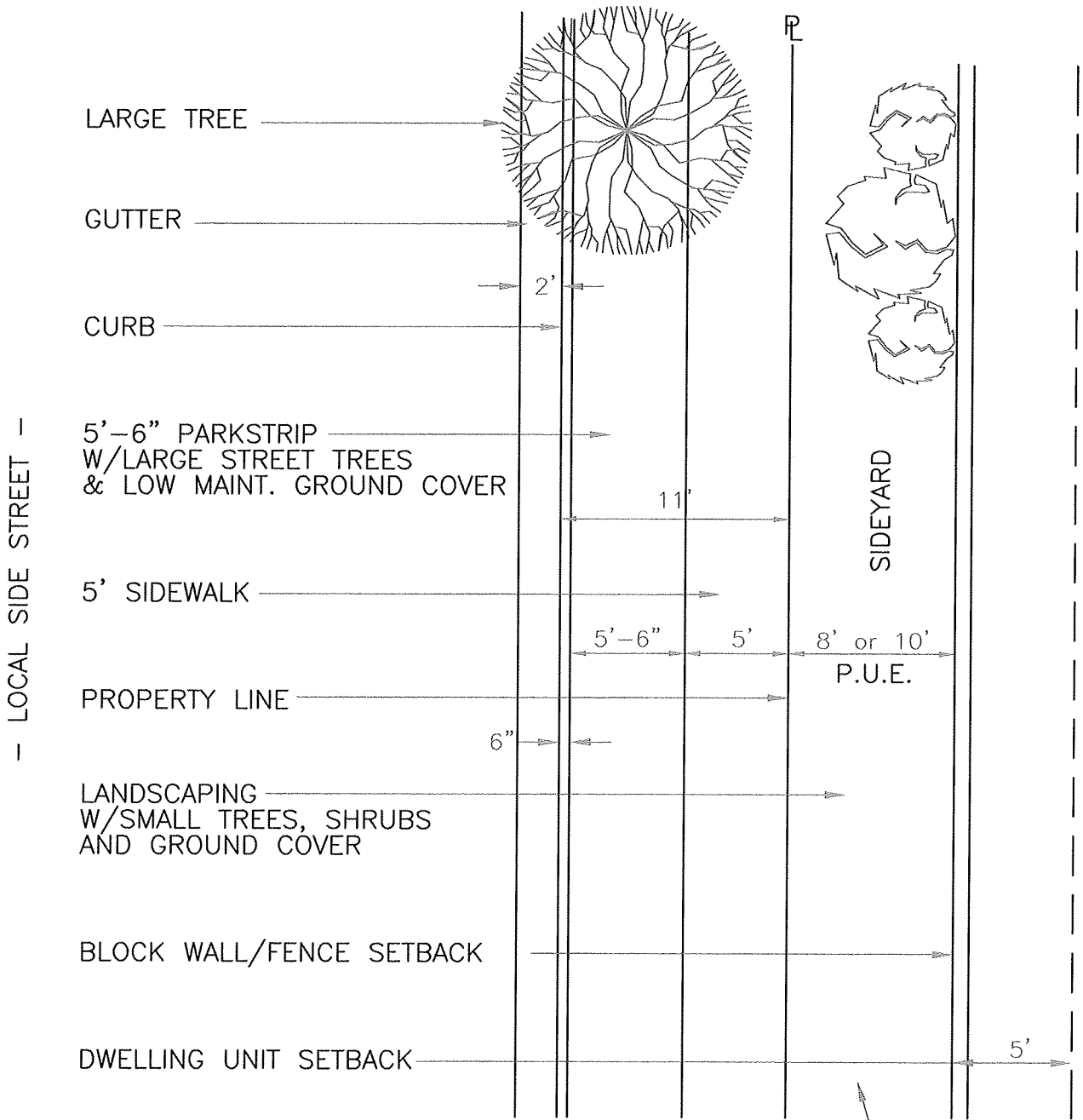

DETAILED FENCE & LANDSCAPE PLAN IS REQUIRED TO BE SUBMITTED TO THE BUILDING OFFICIAL FOR REVIEW & APPROVAL PRIOR TO INSTALLATION.

REGISTERED PROFESSIONAL ENGINEER
BRUCE A. WEBBER
C043156
Exp. 3-31-2008
CIVIL
STATE OF CALIFORNIA

NOT TO SCALE

TYPICAL STREET SIDE YARD SETBACKS AND FENCING WITHIN REEDLEY SPECIFIC PLAN AREA	CITY ENGINEER PUBLIC WORKS DEPARTMENT ENGINEERING DIVISION	1-25-07 PLAN APPROVAL DATE
	REVISIONS JAN. 2007	CITY OF REEDLEY L-13A.1

N:\AutoCad Drawing Files\Standard Plans\Landscape\L-13A-1.dwg

LARGE TREES
Greater than 8-Foot Planter Area

BOTANICAL NAME	COMMON NAME	HEIGHT	WIDTH	R.B.	DECIDUOUS/ EVERGREEN	GROWTH RATE
CATALPA speciosa	Western Catalpa	70'-100'	50'	X	Deciduous	Fast
CELTIS sinensis	Chinese Hackberry	50'-60'	40'-50'	X	Deciduous	Fast
GINKGO BILOBA (Male Only)	Gingko Tree Autumn Gold	50'-65'	35'-40'	X	Deciduous	Slow/ medium
LIRIODENDRON tulipifera	Tulip Tree	50'-70'	40'	X	Deciduous	Fast
PLATANUS acerifolia	Bloodgood London Plane	50'-70'	50'	X	Deciduous	Fast
PINUS canariesis	Canary Island Pine	50'-80'	20'-25'	X	Evergreen	Fast
PINUS elarica	Mondell Pine	50'-60'	50'	X	Evergreen	Fast
QUERCUS agrifolia	Coast Live Oak	25'-60'	25'-30'	X	Deciduous	Fast
QUERCUS lobata	Valley Oak	50'-100'	80'	X	Deciduous	Slow
QUERCUS rubra	Red Oak	70'-90'	60'-80'	X	Deciduous	Fast
QUERCUS suber	Cork Oak	60'-80'	30'-50'	X	Semi Deciduous	Medium
SEQUOIA sempervirens	Coast Redwood	70'-80'	50'	X	Evergreen	Fast

LARGE STREET TREES

CITY ENGINEER
PUBLIC WORKS DEPARTMENT

12-29-05
PLAN APPROVAL DATE

REVISIONS
DEC. 2004

CITY OF REEDLEY
L-13B

MEDIUM TREES
5-Foot to 8-Foot Planter Area

BOTANICAL NAME	COMMON NAME	HEIGHT	WIDTH	R.B.	DECIDUOUS/ EVERGREEN	GROWTH RATE
CERCIS canadensis	Eastern Redbud Oklahoma	25'-30'	20'-25'		Deciduous	Medium
FRAXINUS velutina	Rio Grand Ash Arizona Ash	25'-50'	25'-50'	X	Deciduous	Slow Medium
ILEX opaca	American Holly	20'-25'	5'-20'	X	Evergreen	Fast
KOELREUTERIA bipinnata	Chinese Flame Tree	30'-40'	25'-35'		Deciduous	Slow Medium
KOELREUTERIA paniculata	Goldenrain Tree	20'-30'	15'-20'		Deciduous	Slow Medium
LAURUS nobilis	Grecian Laurel	25'-35'	20'-30'		Evergreen	Fast
NYSSA sylvatica	Sour gum, Tupeco	30'-40'	15'-20'	X	Deciduous	Slow Medium
PINUS halepensis	Aleppo Pine	30'-40'	20'-25'		Deciduous	Fast
PISTACIA chinensis	Keith Davey' Pistache Tree chinese	40-50'	40'-45'	X	Deciduous	Medium
PYRUS kawakamii	Evergreen Pear	30'-40'	30'-40'	X	Deciduous	Slow Medium
QUERCUS ilex	Holly Oak Tree	40'-50'	30'-35'	X	Deciduous	Slow
TILIA cordata	Little-leaf Linden 'Green spire' Tree	35'-45'	25'-35'	X	Deciduous	Slow
ZELKOVA serrata	Sawleaf zelkova	35'-60'	35'-60'	X	Deciduous	Medium

MEDIUM STREET TREES

CITY ENGINEER
PUBLIC WORKS DEPARTMENT

12-29-05
PLAN APPROVAL DATE

REVISIONS
DEC. 2004

CITY OF REEDLEY
L-13C

SMALL TREES
Less than 5-Foot Planter Area

BOTANICAL NAME	COMMON NAME	HEIGHT	WIDTH	R.B.	DECIDUOUS/ EVERGREEN	GROWTH RATE
ABELIA grandiflora	Glossy Abelia (maiden tree)	10'-15'	8'-10'		Deciduous	Slow
CHIONANTHUS retusus	Chinese Fringe Tree	20'	15'-20'		Deciduous	Slow
CORNUS florida	Dogwood "Cloud Nine"	20'-25'	5'-20'	X	Deciduous	Slow
CRATAEGUS phaenopyrum	Washington Thorn	20'-25'	15'-20'		Deciduous	Slow Medium
ERIOBOTRYA defelxa	Bronze Loquat	15'-20'	15'		Evergreen	Slow
FIRMIANA simplex	Chinese Parasol Tree	20'-30'	20'-25'	X	Deciduous	Slow Medium
KOELREUTERIA paniculata	Goldenrain Tree	20'-30'	15'-20'		Deciduous	Slow
LAGERSTROEMIA indica	Crape Myrtle	20'-25'	15'-20'		Deciduous	Slow
MAGNOLIA soulangiana	Rustic Rubra Saucer Magnolia	20'-25'	15'-20'	X	Evergreen	Slow
PYRUS calleryana	Bradford Pear	20'-25'	20'-25'		Deciduous	Slow Medium
STYRAX japonicus	Japanese Snowbell	20'-30'	15'	X	Deciduous	Slow
UMBELLULARIA californica	California Laurel	15'-20'	15'-20'		Evergreen	Slow

SMALL STREET TREES

CITY ENGINEER
PUBLIC WORKS DEPARTMENT

12-29-05
PLAN APPROVAL DATE

REVISIONS

NOV. 2005

CITY OF REEDLEY
L-13D

N:\AutoCad Drawing Files\Standard Plans\L-14.dwg

LANDSCAPE IRRIGATION BACKFLOW ENCLOSURE

NOT TO SCALE

NOTES:

1. PAINT ALL METAL SURFACES WITH 2 COATS DARK GREEN ENAMEL OVER A PRIMER BASE.
2. FRAME CONSTRUCTED OF 1 1/2" BY 1 1/2" ANGLE IRON.
3. CONCRETE SHALL BE CLASS "B" (5 SACK).
4. 1/2"x 2" HEX CAP SCREW, GRADE 2 WITH 2 NUTS EACH.
5. PREFABRICATED SINGLE-LIFT OR DOUBLE-LIFT BACKFLOW ENCLOSURES AVAILABLE FROM NATIONAL WATERWORKS, 2651 E. BYRD AVE., #101, FRESNO, CA 93706 PHONE 559-237-7488, FAX 559-237-6423, SEE TABLES BELOW FOR SIZING.

SIZING FOR SINGLE-LIFT ENCLOSURES					SIZING FOR DOUBLE-LIFT ENCLOSURES				
VALVE SIZE	PART #	WIDTH	LENGTH	HEIGHT	VALVE SIZE	PART #	WIDTH	LENGTH	HEIGHT
1"	BFE-100	12"	30"	24"	2-1/2"	BFE-250	24"	60"	36"
1-1/2"	BFE-200	18"	42"	30"	3"	BFE-400	30"	72"	42"
2"	BFE-200	18"	42"	30"	4"	BFE-400	30"	72"	42"
					6"	BFE-600	30"	84"	42"

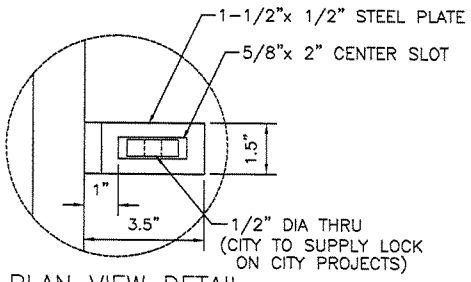

PLAN VIEW DETAIL

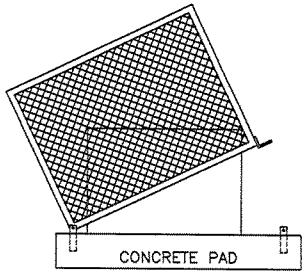

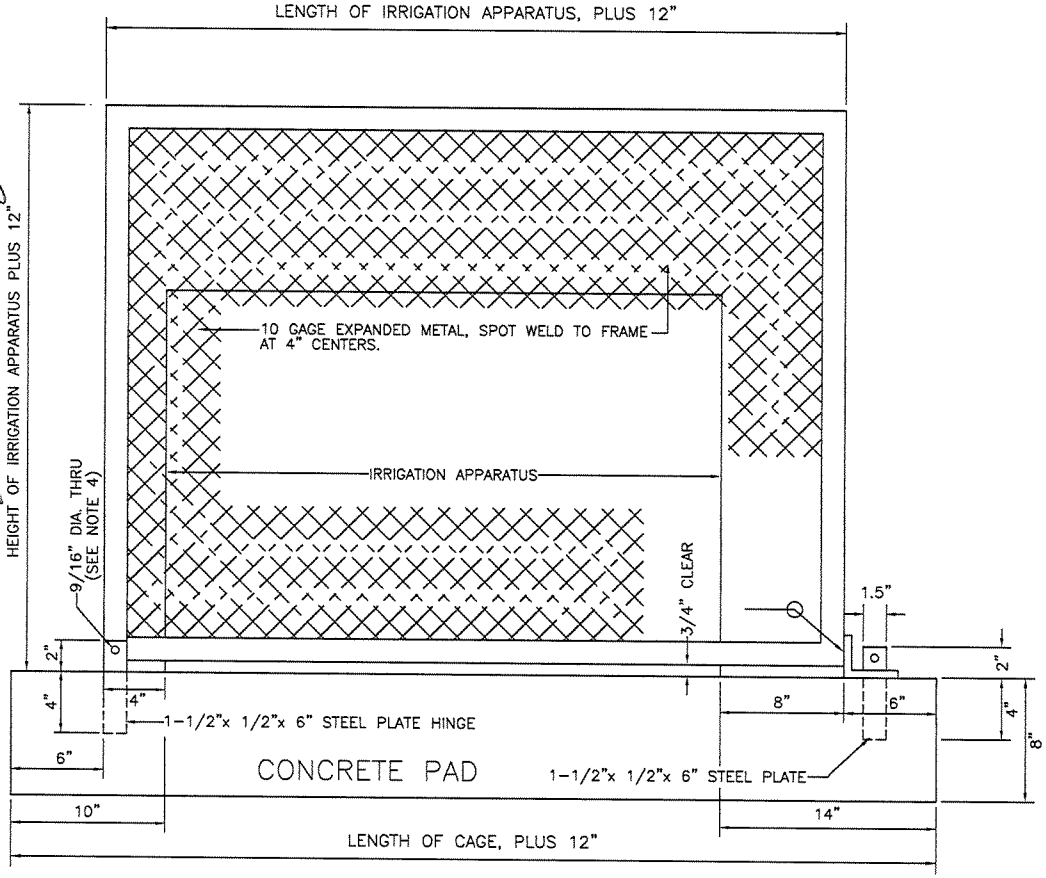

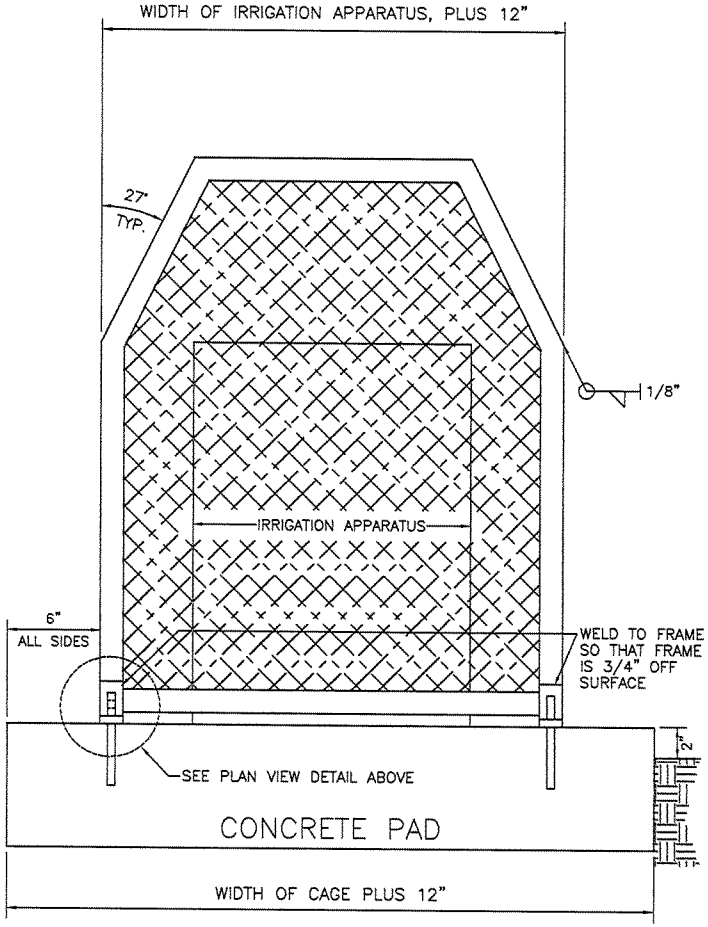

CITY ENGINEER
PUBLIC WORKS DEPARTMENT
ENGINEERING DIVISION

1-16-07
PLAN APPROVAL DATE

REVISIONS:
JAN. 12, 2007

CITY OF REEDLEY

L-14