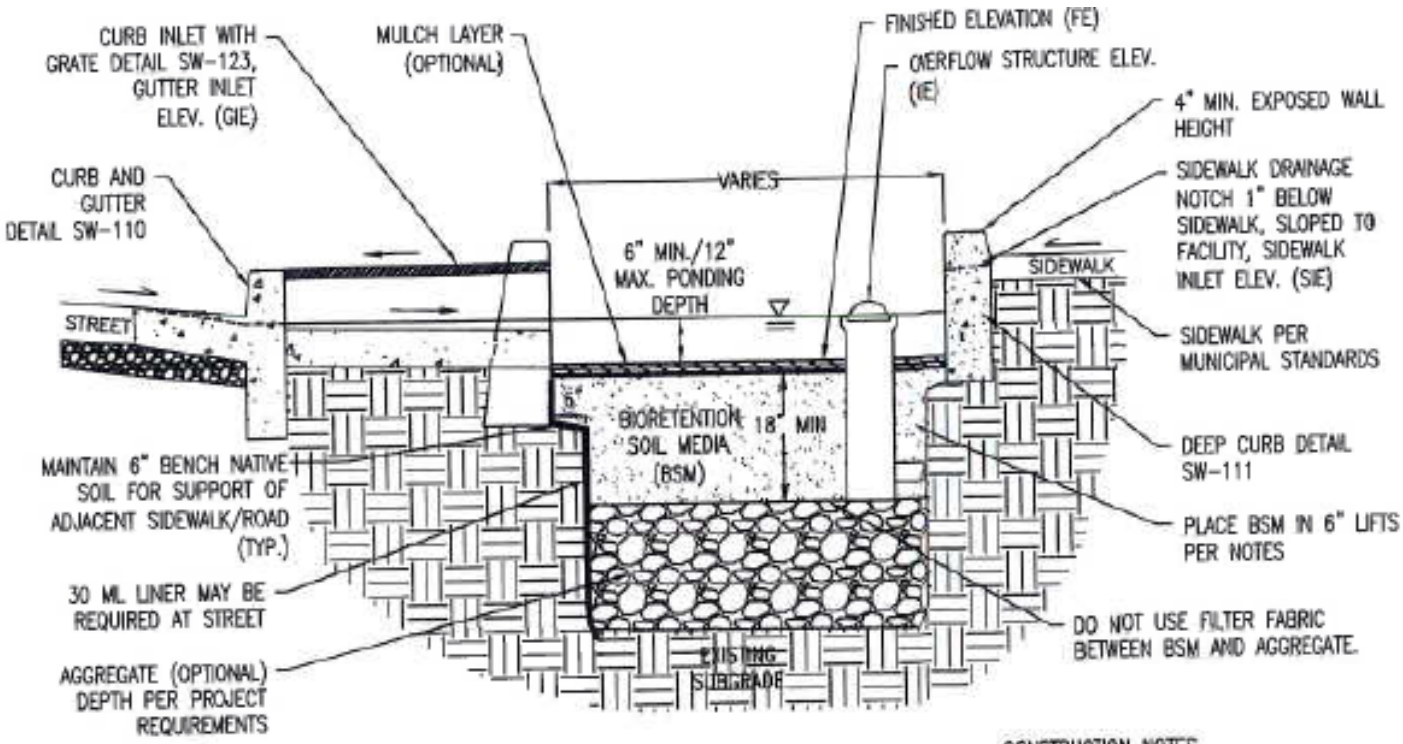

DESIGN NOTES

1. ADDITIONAL DESIGN GUIDANCE PROVIDED IN BIORETENTION TECHNICAL SPECIFICATIONS DOCUMENT.
2. OVERFLOW STRUCTURE REQUIRED FOR IN-LINE SYSTEMS WITHOUT OVERFLOW BYPASS, DETAIL SW-140.
3. PROVIDE SPOT ELEVATIONS AT INLETS ON CIVIL PLANS (FE, OE, GIE, SIE). SEE DETAIL SW-120.
4. EDGE CONDITION WILL VARY FOR NEW AND RETROFIT PROJECTS. CURB, WALL, AND SIDEWALK DETAILS MAY BE MODIFIED FOR PROJECT BY CIVIL AND GEOTECHNICAL ENGINEERS SUBJECT TO APPROVAL BY THE CITY ENGINEER.
5. IF CHECK DAMS ARE NEEDED, SEE CONCRETE CHECK DAM DETAIL SW-131.
6. PROVIDE MONITORING WELL IN EACH FACILITY, PER BIORETENTION TECHNICAL SPECIFICATIONS.
7. IF CALTRANS CLASS 2 PERMEABLE IS NOT AVAILABLE, SUBSTITUTE CLASS 3 PERMEABLE WITH AN OVERLYING 3" DEEP LAYER OF 3/4" (NO. 4) OPEN-GRADED AGGREGATE.
8. BIORETENTION SOIL MEDIA (BSM) SPECIFICATION PER BIORETENTION TECHNICAL SPECIFICATIONS.
9. PLANTING DESIGN AND IRRIGATION PER BIORETENTION TECHNICAL SPECIFICATIONS.
10. MULCH (OPTIONAL) PER BIORETENTION TECHNICAL SPECIFICATIONS.
11. LOCATE ENERGY DISSIPATION COBBLE ONLY AS SPECIFIED IN INLET DETAILS – AVOID DECORATIVE USE.

CONSTRUCTION NOTES

1. SCARIFY SUBGRADE BEFORE INSTALLING BIORETENTION AREA AGGREGATE AND BSM.
2. FACILITY EXCAVATION TO ALLOW FOR SPECIFIED SOIL AND MULCH DEPTHS TO ACHIEVE FINISHED ELEVATIONS ON CIVIL PLANS.
3. COMPACT EACH 6" LIFT OF BSM WITH LANDSCAPE ROLLER OR BY LIGHTLY WETTING. IF WETTING, ALLOW TO DRY OVERNIGHT BEFORE PLANTING.
4. DO NOT WORK WITHIN BIORETENTION AREA DURING RAIN OR UNDER WET CONDITIONS.
5. KEEP HEAVY MACHINERY OUTSIDE BIORETENTION AREA LIMITS.
6. LAYBACK SLOPE AS FLAT AS POSSIBLE UNTIL TOP WIDTH PRODUCES 1:1 SLOPE & 24" BOTTOM WIDTH. AS PLANTER GETS WIDER MAINTAIN 1:1 SLOPE AND INCREASE BOTTOM WIDTH WIDER THAN 24". ALTERNATIVE TRENCH WALL CONFIGURATIONS MAY BE PROPOSED BY THE PROJECT GEOTECHNICAL ENGINEER (I.E. VERTICAL SHORING, REINFORCED TRENCH SIDEWALL) THAT DON'T REQUIRE SIDEWALK SUPPORT FROM THE LIGHTLY COMPACTED BSM.

NOT TO SCALE

STREET BIORETENTION FACILITY FLAT/PLANTER, ON-STREET PARKING, SIDEWALK, WITHOUT UNDERDRAIN	REVISIONS: JAN. 2016 DRAWN BY: kjp	CITY OF REEDLEY LID-1

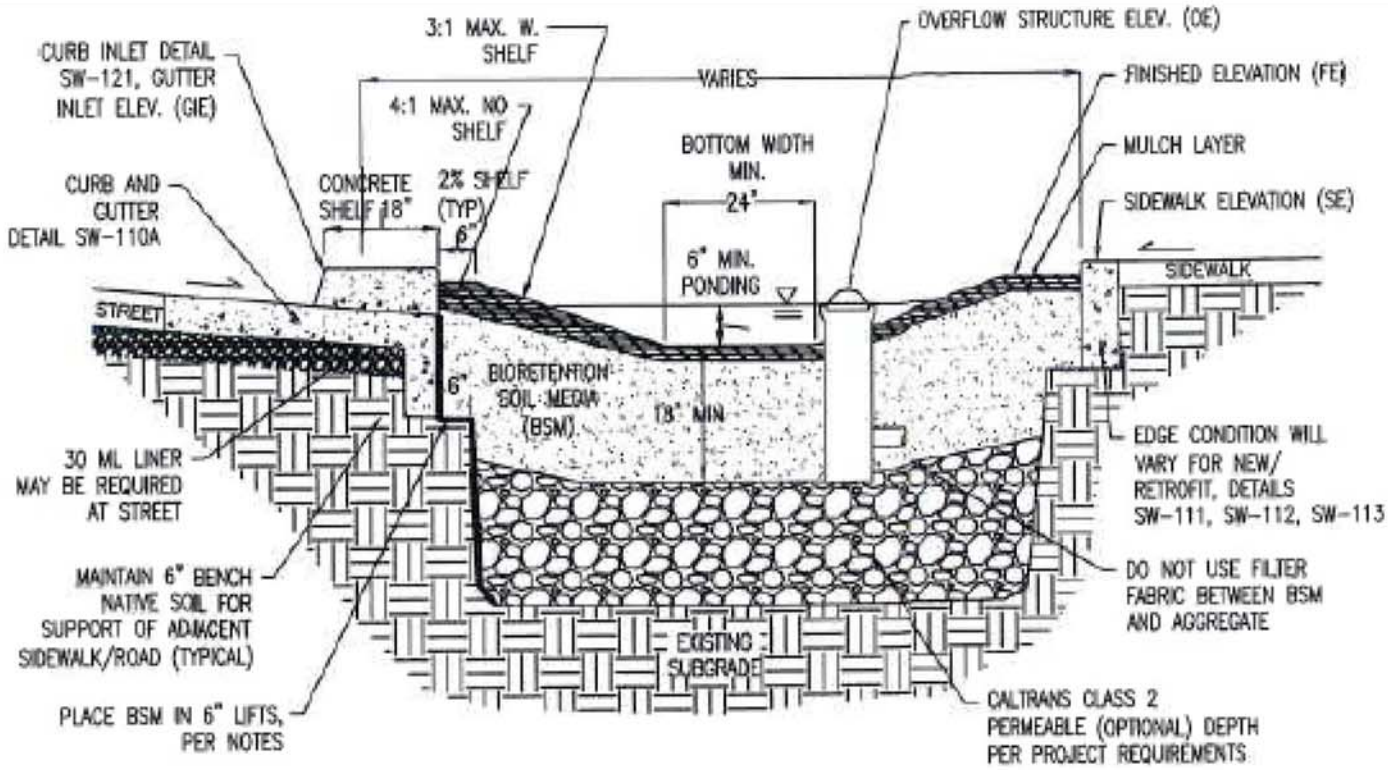

DESIGN NOTES

1. ADDITIONAL DESIGN GUIDANCE PROVIDED IN BIORETENTION TECHNICAL SPECIFICATIONS DOCUMENT.
2. OVERFLOW STRUCTURE REQUIRED FOR IN-LINE SYSTEMS WITHOUT OVERFLOW BYPASS, DETAIL SW-140.
3. PROVIDE SPOT ELEVATIONS AT INLETS ON CIVIL PLANS (FE, OE, GIE, SE). SEE DETAIL SW-121.
4. MAX. LONGITUDINAL SLOPE 6% WITH CHECK DAMS. SEE DETAILS SW-130, SW-131.
5. EDGE CONDITION WILL VARY FOR NEW AND RETROFIT PROJECTS. CURB AND SIDEWALK DETAILS MAY BE MODIFIED FOR PROJECT BY CIVIL AND GEOTECHNICAL ENGINEERS SUBJECT TO APPROVAL BY THE CITY ENGINEER.
6. PROVIDE MONITORING WELL IN EACH FACILITY, PER BIORETENTION TECHNICAL SPECIFICATIONS.
7. IF CALTRANS CLASS 2 PERMEABLE IS NOT AVAILABLE, SUBSTITUTE CLASS 3 PERMEABLE WITH AN OVERLYING 3" DEEP LAYER OF 3/4" (NO. 4) OPEN-GRADED AGGREGATE.
8. BIORETENTION SOIL MEDIA (BSM) SPECIFICATION PER BIORETENTION TECHNICAL SPECIFICATIONS.
9. PLANTING DESIGN AND IRRIGATION PER BIORETENTION TECHNICAL SPECIFICATIONS.
10. MULCH (OPTIONAL) PER BIORETENTION TECHNICAL SPECIFICATIONS.
11. LOCATE ENERGY DISSIPATION COBBLE ONLY AS SPECIFIED IN INLET DETAILS - AVOID DECORATIVE USE.

CONSTRUCTION NOTES

1. SCARIFY SUBGRADE BEFORE INSTALLING BIORETENTION AREA AGGREGATE AND BSM.
2. FACILITY EXCAVATION TO ALLOW FOR SPECIFIED SOIL AND MULCH DEPTHS TO ACHIEVE FINISHED ELEVATIONS ON CIVIL PLANS.
3. COMPACT EACH 6" LIFT OF BSM WITH LANDSCAPE ROLLER OR BY LIGHTLY WETTING. IF WETTING, ALLOW TO DRY OVERNIGHT BEFORE PLANTING.
4. DO NOT WORK WITHIN BIORETENTION AREA DURING RAIN OR UNDER WET CONDITIONS.
5. KEEP HEAVY MACHINERY OUTSIDE BIORETENTION AREA LIMITS.
6. LAYBACK SLOPE AS FLAT AS POSSIBLE UNTIL TOP WIDTH PRODUCES 1:1 SLOPE & 24" BOTTOM WIDTH. AS PLANTER GETS WIDER MAINTAIN 1:1 SLOPE AND INCREASE BOTTOM WIDTH WIDER THAN 24". ALTERNATIVE TRENCH WALL CONFIGURATIONS MAY BE PROPOSED BY THE PROJECT GEOTECHNICAL ENGINEER (I.E. VERTICAL SHORING, REINFORCED TRENCH SIDEWALL) THAT DON'T REQUIRE SIDEWALK SUPPORT FROM THE LIGHTLY COMPACTED BSM.

NOT TO SCALE

STREET BIORETENTION FACILITY SLOPE SIDED, ON-STREET PARKING SIDEWALK, WITHOUT UNDERDRAIN	REVISIONS: JAN. 2016 DRAWN BY: kjp	CITY OF REEDLEY LID-2

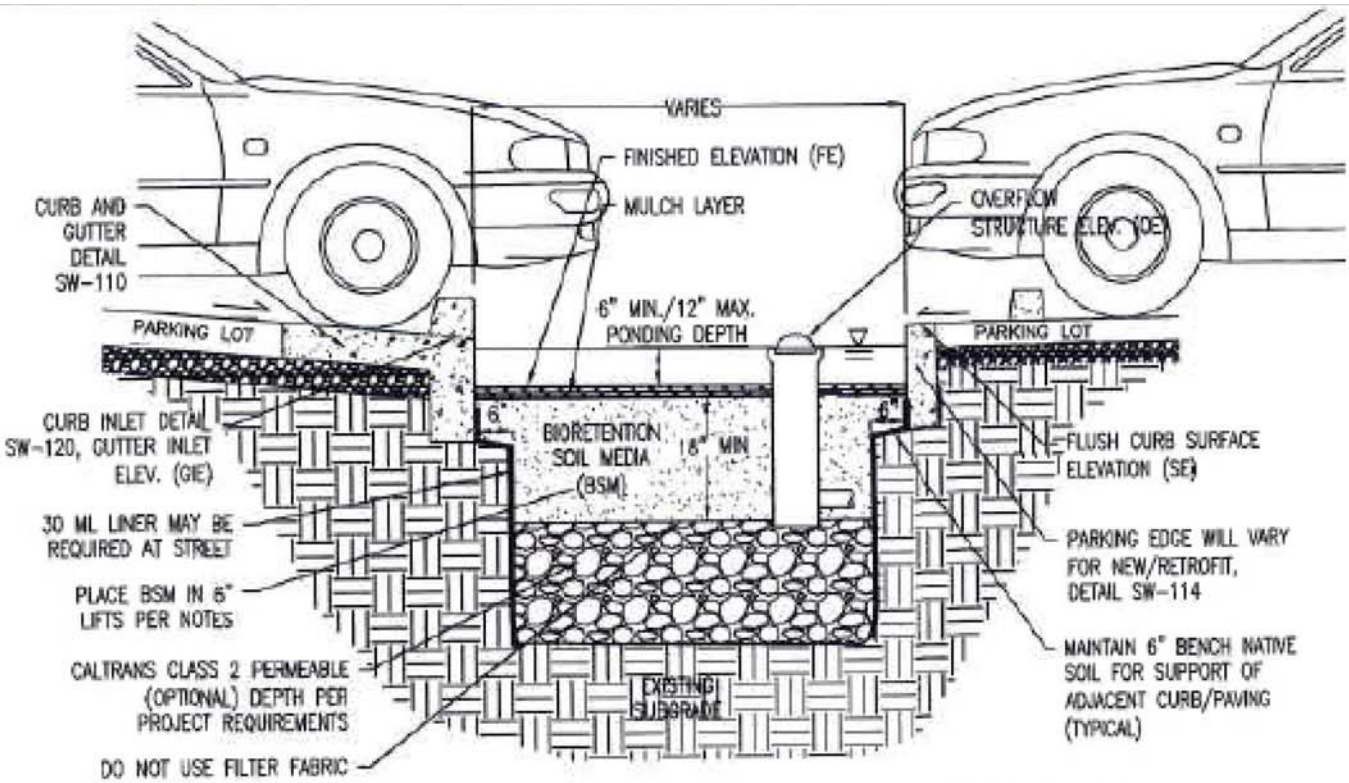

DESIGN NOTES

1. ADDITIONAL DESIGN GUIDANCE PROVIDED IN BIORETENTION TECHNICAL SPECIFICATIONS DOCUMENT.
2. OVERFLOW STRUCTURE REQUIRED FOR IN-LINE SYSTEMS WITHOUT OVERFLOW BYPASS, DETAIL SW-140.
3. PROVIDE SPOT ELEVATIONS AT INLETS ON CIVIL PLANS (FE, OE, GIE, SE). SEE DETAIL SW-120.
4. EDGE CONDITION WILL VARY FOR PARKING LOT PROJECTS. SEE PARKING LOT EDGE OPTIONS DETAILS, SW-114. CURB AND FLUSH EDGE DETAILS MAY BE MODIFIED FOR PROJECT BY CIVIL AND GEOTECHNICAL ENGINEERS SUBJECT TO APPROVAL BY THE CITY ENGINEER.
5. IF CHECK DAMS ARE NEEDED, SEE CONCRETE CHECK DAM DETAIL SW-131.
6. PROVIDE MONITORING WELL IN EACH FACILITY, PER BIORETENTION TECHNICAL SPECIFICATIONS.
7. IF CALTRANS CLASS 2 PERMEABLE IS NOT AVAILABLE, SUBSTITUTE CLASS 3 PERMEABLE WITH AN OVERLYING 3" DEEP LAYER OF 3/4" (NO. 4) OPEN-GRADED AGGREGATE.
8. BIORETENTION SOIL MEDIA (BSM) SPECIFICATION PER BIORETENTION TECHNICAL SPECIFICATIONS.
9. PLANTING DESIGN AND IRRIGATION PER BIORETENTION TECHNICAL SPECIFICATIONS.
10. MULCH (OPTIONAL) PER BIORETENTION TECHNICAL SPECIFICATIONS.
11. LOCATE ENERGY DISSIPATION COBBLE ONLY AS SPECIFIED IN INLET DETAILS – AVOID DECORATIVE USE.

CONSTRUCTION NOTES

1. SCARIFY SUBGRADE BEFORE INSTALLING BIORETENTION AREA AGGREGATE AND BSM.
2. FACILITY EXCAVATION TO ALLOW FOR SPECIFIED SOIL AND MULCH DEPTHS TO ACHIEVE FINISHED ELEVATIONS ON CIVIL PLANS.
3. COMPACT EACH 6" LIFT OF BSM WITH LANDSCAPE ROLLER OR BY LIGHTLY WETTING. IF WETTING, ALLOW TO DRY OVERNIGHT BEFORE PLANTING.
4. DO NOT WORK WITHIN BIORETENTION AREA DURING RAIN OR UNDER WET CONDITIONS.
5. KEEP HEAVY MACHINERY OUTSIDE BIORETENTION AREA LIMITS.
6. LAYBACK SLOPE AS FLAT AS POSSIBLE UNTIL TOP WIDTH PRODUCES 1:1 SLOPE & 24" BOTTOM WIDTH. AS PLANTER GETS WIDER MAINTAIN 1:1 SLOPE AND INCREASE BOTTOM WIDTH WIDER THAN 24". ALTERNATIVE TRENCH WALL CONFIGURATIONS MAY BE PROPOSED BY THE PROJECT GEOTECHNICAL ENGINEER (I.E. VERTICAL SHORING, REINFORCED TRENCH SIDEWALL) THAT DON'T REQUIRE SIDEWALK SUPPORT FROM THE LIGHTLY COMPACTED BSM.

NOT TO SCALE

PARKING LOT BIORETENTION FACILITY FLAT/PLANTER WITHOUT UNDERDRAIN	REVISIONS: JAN. 2016 DRAWN BY: kjp	CITY OF REEDLEY LID–3

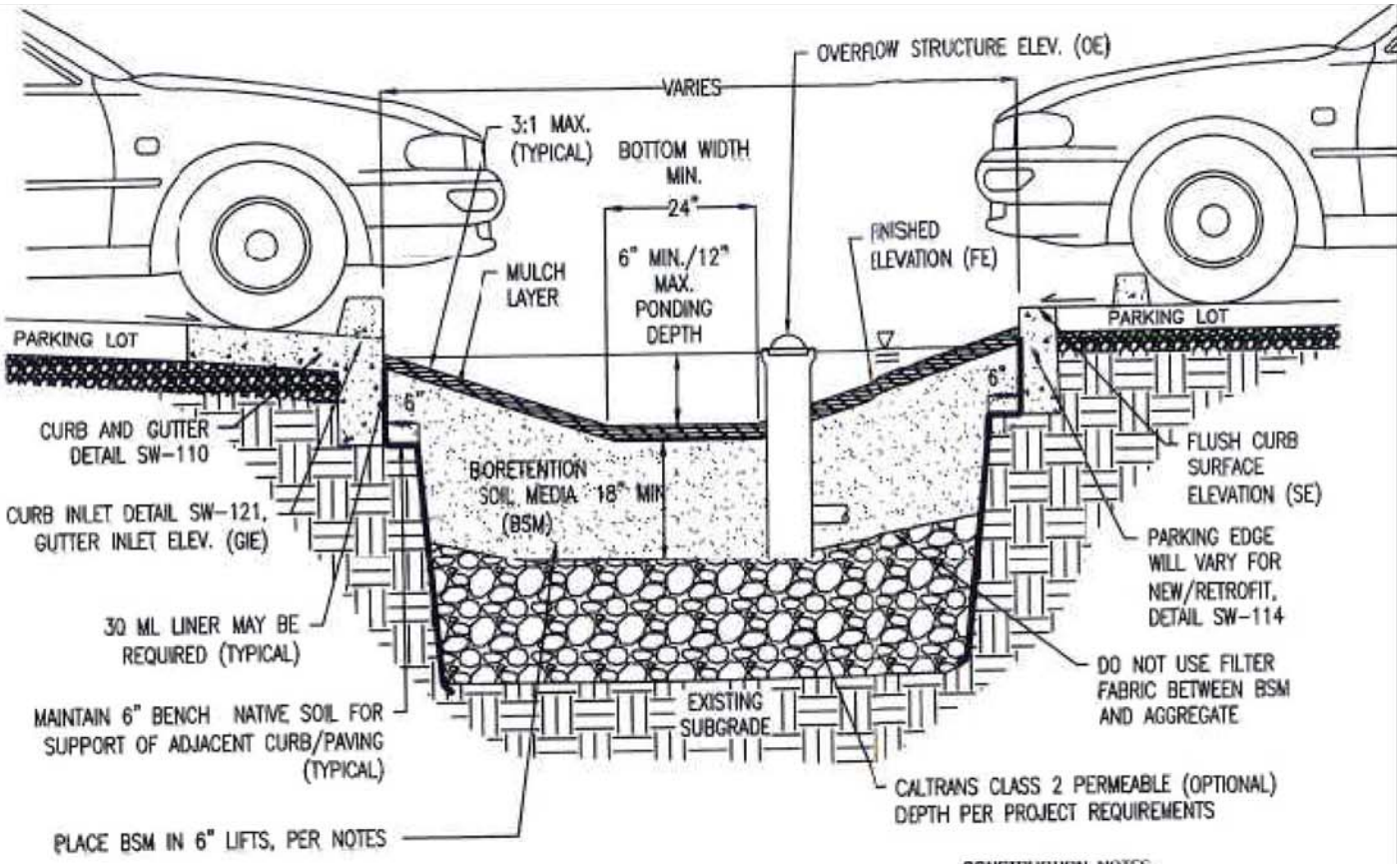

DESIGN NOTES

1. ADDITIONAL DESIGN GUIDANCE PROVIDED IN BIORETENTION TECHNICAL SPECIFICATIONS DOCUMENT.
2. OVERFLOW STRUCTURE REQUIRED FOR IN-LINE SYSTEMS WITHOUT OVERFLOW BYPASS, DETAIL SW-140.
3. PROVIDE SPOT ELEVATIONS AT INLETS ON CIVIL PLANS (FE, OE, GIE, SE). SEE DETAIL SW-121.
4. MAX. LONGITUDINAL SLOPE 6% WITH CHECK DAMS. SEE DETAILS SW-130, SW-131.
4. EDGE CONDITION WILL VARY FOR PARKING LOT PROJECTS. SEE PARKING LOT EDGE OPTIONS DETAILS, SW-114. CURB AND FLUSH EDGE DETAILS MAY BE MODIFIED FOR PROJECT BY CIVIL AND GEOTECHNICAL ENGINEERS SUBJECT TO APPROVAL BY THE CITY ENGINEER.
5. PROVIDE MONITORING WELL IN EACH FACILITY, PER BIORETENTION TECHNICAL SPECIFICATIONS.
6. IF CALTRANS CLASS 2 PERMEABLE IS NOT AVAILABLE, SUBSTITUTE CLASS 3 PERMEABLE WITH AN OVERLYING 3" DEEP LAYER OF 3/4" (NO. 4) OPEN-GRADED AGGREGATE.
7. BIORETENTION SOIL MEDIA (BSM) SPECIFICATION PER BIORETENTION TECHNICAL SPECIFICATIONS.
8. PLANTING DESIGN AND IRRIGATION PER BIORETENTION TECHNICAL SPECIFICATIONS.
9. MULCH (OPTIONAL) PER BIORETENTION TECHNICAL SPECIFICATIONS.
10. LOCATE ENERGY DISSIPATION COBBLE ONLY AS SPECIFIED IN INLET DETAILS – AVOID DECORATIVE USE.

CONSTRUCTION NOTES

1. SCARIFY SUBGRADE BEFORE INSTALLING BIORETENTION AREA AGGREGATE AND BSM.
2. FACILITY EXCAVATION TO ALLOW FOR SPECIFIED SOIL AND MULCH DEPTHS TO ACHIEVE FINISHED ELEVATIONS ON CIVIL PLANS.
3. COMPACT EACH 6" LIFT OF BSM WITH LANDSCAPE ROLLER OR BY LIGHTLY WETTING. IF WETTING, ALLOW TO DRY OVERNIGHT BEFORE PLANTING.
4. DO NOT WORK WITHIN BIORETENTION AREA DURING RAIN OR UNDER WET CONDITIONS.
5. KEEP HEAVY MACHINERY OUTSIDE BIORETENTION AREA LIMITS.
6. LAYBACK SLOPE AS FLAT AS POSSIBLE UNTIL TOP WIDTH PRODUCES 1:1 SLOPE & 24" BOTTOM WIDTH. AS PLANTER GETS WIDER MAINTAIN 1:1 SLOPE AND INCREASE BOTTOM WIDTH WIDER THAN 24". ALTERNATIVE TRENCH WALL CONFIGURATIONS MAY BE PROPOSED BY THE PROJECT GEOTECHNICAL ENGINEER (I.E. VERTICAL SHORING, REINFORCED TRENCH SIDEWALL) THAT DON'T REQUIRE SIDEWALK SUPPORT FROM THE LIGHTLY COMPACTED BSM.

NOT TO SCALE

PARKING LOT BIORETENTION FACILITY SLOPE SIDED, WITHOUT UNDERDRAIN	REVISIONS: JAN. 2016 DRAWN BY: kjp	CITY OF REEDLEY LID–4

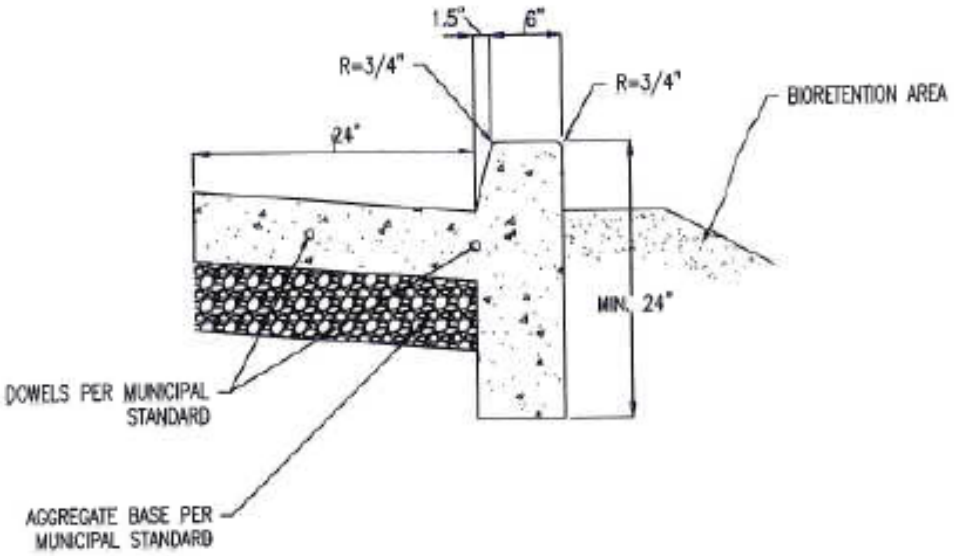

DESIGN NOTES

1. SPECIAL DESIGN CONSIDERATION OR STRUCTURAL REVIEW MAY BE REQUIRED FOR LONGER PLANTER WALL SPANS. STEEL REINFORCEMENT OR ADDITIONAL CONCRETE CHECK DAMS MAY BE NEEDED FOR STABILITY.

2. EDGE CONDITION WILL VARY FOR NEW AND RETROFIT PROJECTS. CURB, GUTTER, AND WALL DETAILS MAY BE MODIFIED BY CIVIL AND GEOTECHNICAL ENGINEERS SUBJECT TO APPROVAL BY CITY ENGINEER.

3. CONCRETE AND EXPANSION JOINTS SHALL MEET THE REQUIREMENTS OF THE MUNICIPALITY.

CONSTRUCTION NOTES

1. FINISH ALL EXPOSED CONCRETE SURFACES.

2. LAYBACK SLOPE AS FLAT AS POSSIBLE UNTIL TOP WIDTH PRODUCES 1:1 SLOPE & 24" BOTTOM WIDTH. AS PLANTER GETS WIDER MAINTAIN 1:1 SLOPE AND INCREASE BOTTOM WIDTH WIDER THAN 24". ALTERNATIVE TRENCH WALL CONFIGURATIONS MAY BE PROPOSED BY THE PROJECT GEOTECHNICAL ENGINEER (I.E. VERTICAL SHORING, REINFORCED TRENCH SIDEWALL) THAT DON'T REQUIRE SIDEWALK SUPPORT FROM THE LIGHTLY COMPACTED BSM.

NOT TO SCALE

CURB & GUTTER	REVISIONS: JAN. 2016 DRAWN BY: kjp	CITY OF REEDLEY LID-5

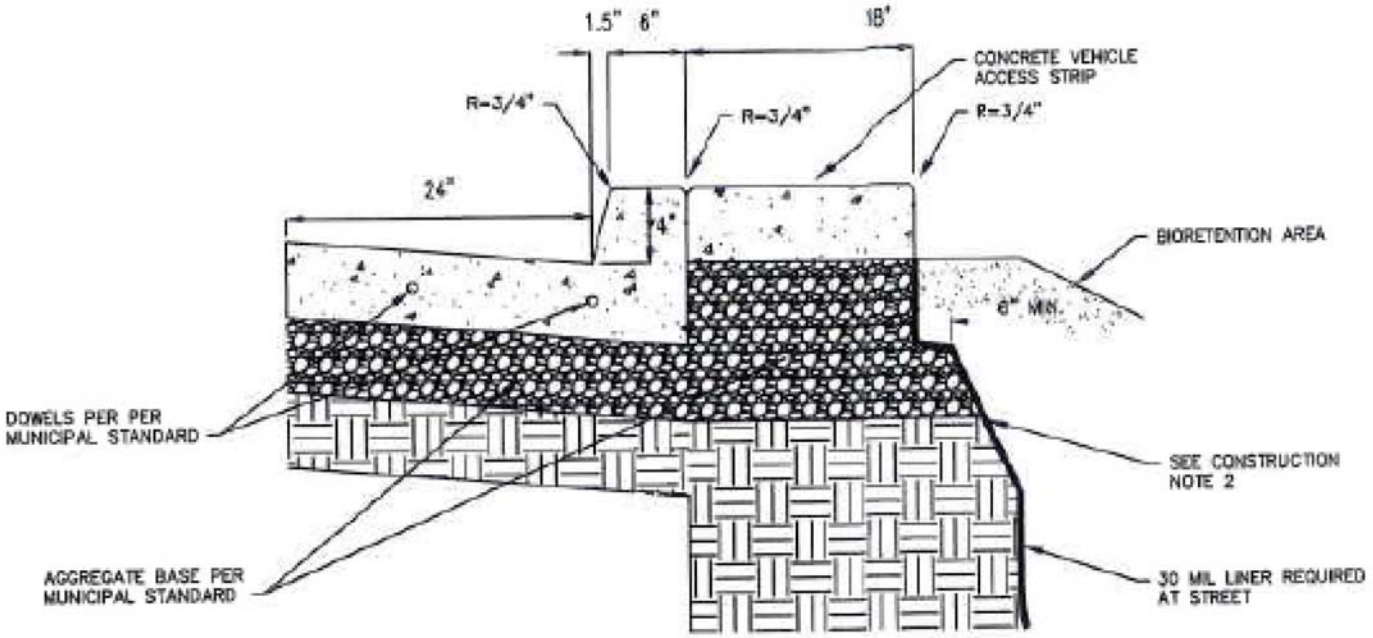

DESIGN NOTES

1. SPECIAL CONCRETE AND EXPANSION JOINS SHALL MEET THE REQUIREMENTS OF MUNICIPAL STANDARDS

2. PROVIDE OPENINGS IN CURB (12" WIDE) TO ALLOW FOR SURFACE DRAINAGE TO BIORETENTION AREAS IF DEDICATED INLET NOT USED. SPACING TO BE DETERMINED BY PROJECT ENGINEER BASED ON DESIGN STORM TO MINIMIZE PONDING AGAINST CURB FOR MEDIAN ISLAND APPLICATION.

CONSTRUCTION NOTES

1. FINISH ALL EXPOSED CONCRETE SURFACES.

2. LAYBACK SLOPE AS FLAT AS POSSIBLE UNTIL TOP WIDTH PRODUCES 1:1 SLOPE & 24" BOTTOM WIDTH. AS PLANTER GETS WIDER MAINTAIN 1:1 SLOPE AND INCREASE BOTTOM WIDTH WIDER THAN 24". ALTERNATIVE TRENCH WALL CONFIGURATIONS MAY BE PROPOSED BY THE PROJECT GEOTECHNICAL ENGINEER (I.E. VERTICAL SHORING, REINFORCED TRENCH SIDEWALL) THAT DON'T REQUIRE SIDEWALK SUPPORT FROM THE LIGHTLY COMPACTED BSM.

NOT TO SCALE

CURB & GUTTER	REVISIONS: JAN. 2016 DRAWN BY: kjp	CITY OF REEDLEY LID-6

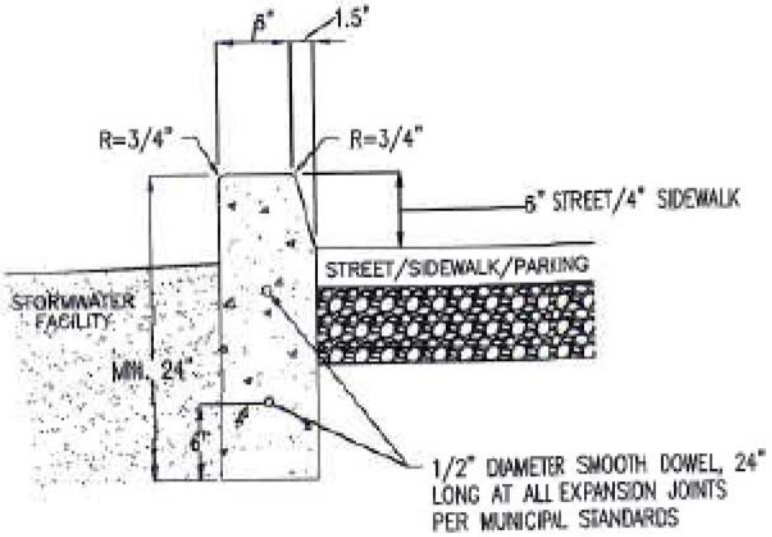

DESIGN NOTES

1. SPECIAL DESIGN CONSIDERATION OR STRUCTURAL REVIEW MAY BE REQUIRED FOR LONGER SWALE EDGE SPANS. STEEL REINFORCEMENT OR ADDITIONAL CONCRETE CHECK DAMS MAY BE NEEDED FOR STABILITY.

2. WHEN SIDEWALK DRAINS TO PLANTER, PROVIDE 4" – 6" WIDE NOTCH OPENINGS, 1" BELOW SIDEWALK, SLOPED TO FACILITY, PER BIORETENTION PLANTER DETAILS. SPACE OPENINGS TO CONVEY FLOWS. PROVIDE MINIMUM 2" COVER BETWEEN DRAINAGE NOTCH OPENING AND DOWELS.

3. CONCRETE AND EXPANSION JOINTS SHALL MEET THE REQUIREMENTS OF THE CITY.

CONSTRUCTION NOTES

1. FINISH ALL EXPOSED CONCRETE SURFACES.

2. LAYBACK SLOPE AS FLAT AS POSSIBLE UNTIL TOP WIDTH PRODUCES 1:1 SLOPE & 24" BOTTOM WIDTH. AS PLANTER GETS WIDER MAINTAIN 1:1 SLOPE AND INCREASE BOTTOM WIDTH WIDER THAN 24". ALTERNATIVE TRENCH WALL CONFIGURATIONS MAY BE PROPOSED BY THE PROJECT GEOTECHNICAL ENGINEER (I.E. VERTICAL SHORING, REINFORCED TRENCH SIDEWALL) THAT DON'T REQUIRE SIDEWALK SUPPORT FROM THE LIGHTLY COMPACTED BSM.

NOT TO SCALE

DEEP CURB	REVISIONS: JAN. 2016	CITY OF REEDLEY
	DRAWN BY: kjp	LID–7

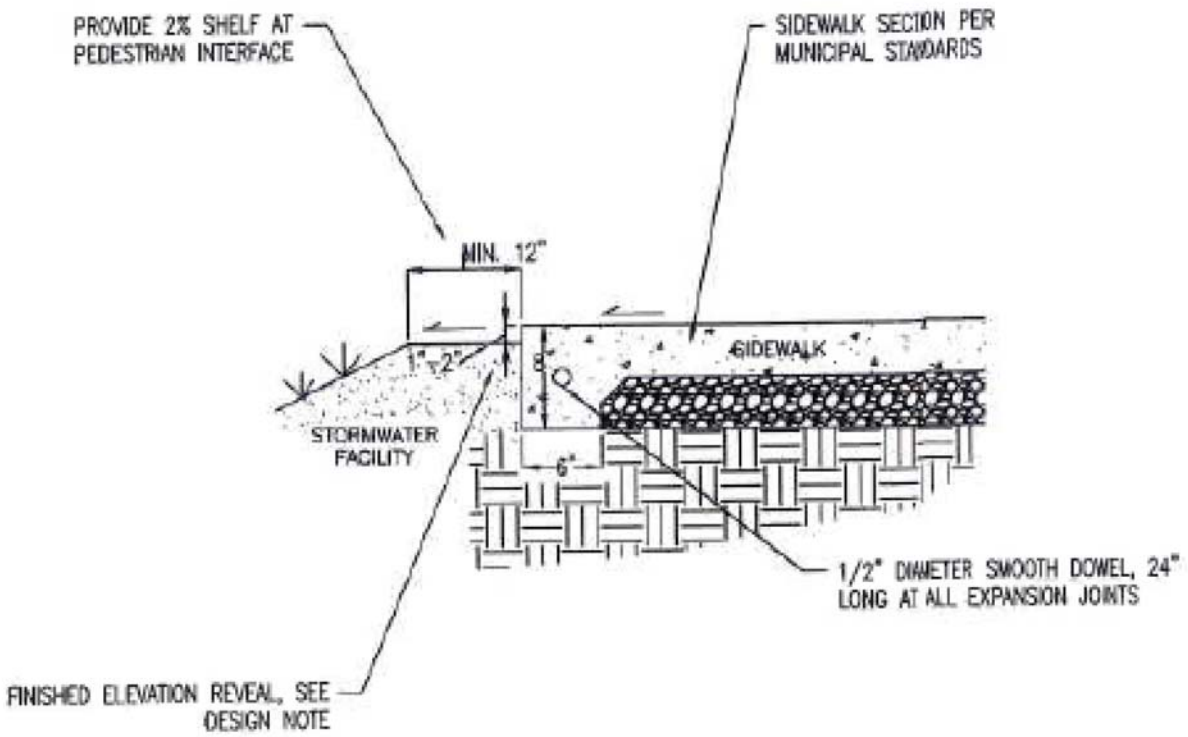

DESIGN NOTES

1. SPECIAL DESIGN CONSIDERATION OR STRUCTURAL REVIEW MAY BE REQUIRED FOR LONGER FACILITY EDGE SPANS. STEEL REINFORCEMENT OR ADDITIONAL CONCRETE CHECK DAMS MAY BE NEEDED FOR STABILITY.
2. FINISHED ELEVATION REVEAL – WHERE SIDEWALK CONVEYS SHEET FLOW TO FACILITY, A 1"–2" REVEAL SHOULD BE MAINTAINED BETWEEN SIDEWALK AND FACILITY FINISHED GRADE TO AVOID MULCH OR PLANT BUILDUP FROM BLOCKING FLOWS.
3. CONCRETE AND EXPANSION JOINTS SHALL MEET THE REQUIREMENTS OF THE CITY.

CONSTRUCTION NOTES

1. FINISH ALL EXPOSED CONCRETE SURFACES.

NOT TO SCALE

THICKENED EDGE SIDEWALK	REVISIONS: JAN. 2016 DRAWN BY: kjp	CITY OF REEDLEY LID–8

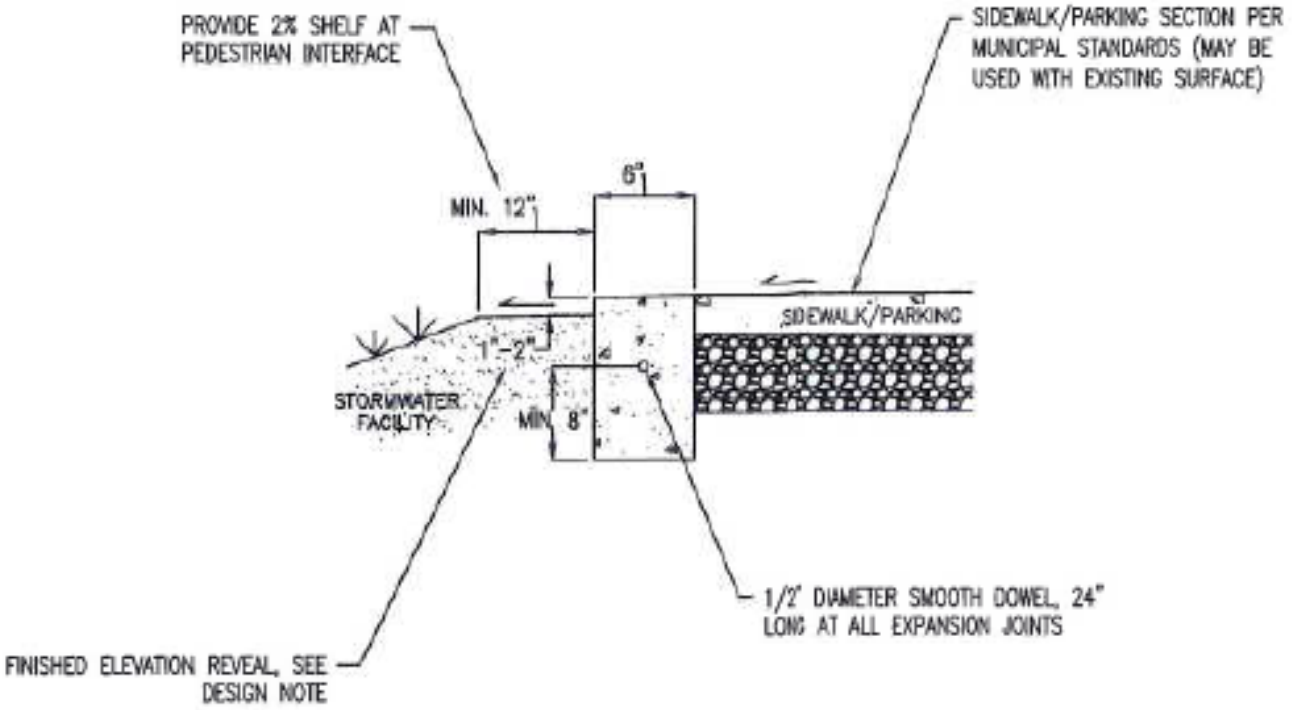

DESIGN NOTES

1. SPECIAL DESIGN CONSIDERATION OR STRUCTURAL REVIEW MAY BE REQUIRED FOR LONGER FACILITY EDGE SPANS. STEEL REINFORCEMENT OR ADDITIONAL CONCRETE CHECK DAMS MAY BE NEEDED FOR STABILITY.

2. EDGE CONDITION WILL VARY FOR PROJECTS. CURB DETAILS MAY BE MODIFIED BY CIVIL AND GEOTECHNICAL ENGINEERS SUBJECT TO APPROVAL BY CITY ENGINEER.

3. CONCRETE AND EXPANSION JOINTS SHALL MEET THE REQUIREMENTS OF THE CITY.

4. FINISHED ELEVATION REVEAL AT SIDEWALK – WHERE SIDEWALK CONVEYS SHEET FLOW TO FACILITY, A 1"–2" REVEAL SHOULD BE MAINTAINED BETWEEN SIDEWALK AND FACILITY FINISHED GRADE TO AVOID MULCH OR PLANT BUILDUP FROM BLOCKING FLOWS AND REDUCE DROP AT PEDESTRIAN INTERFACE.

CONSTRUCTION NOTES

1. FINISH ALL EXPOSED CONCRETE SURFACES.

NOT TO SCALE

FLUSH CURB AT SIDEWALK	REVISIONS: JAN. 2016	CITY OF REEDLEY
	DRAWN BY: kjp	LID–9

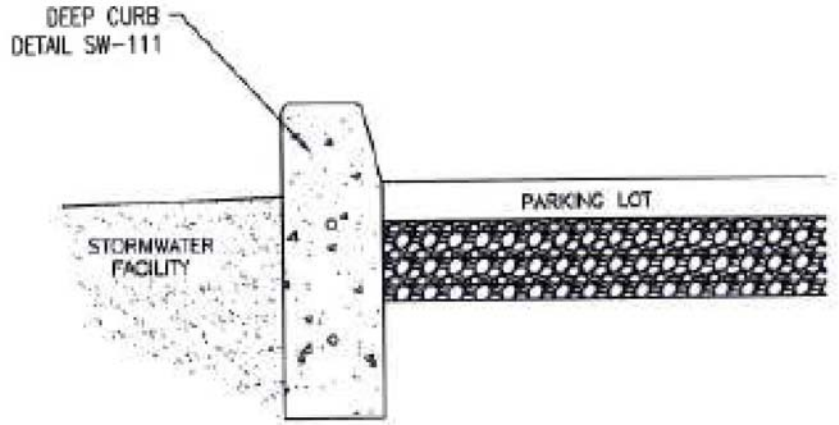

DEEP CURB

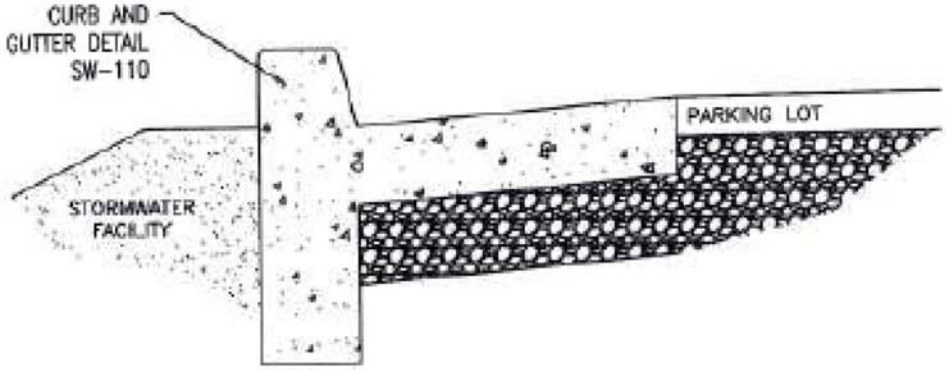

CURB AND GUTTER

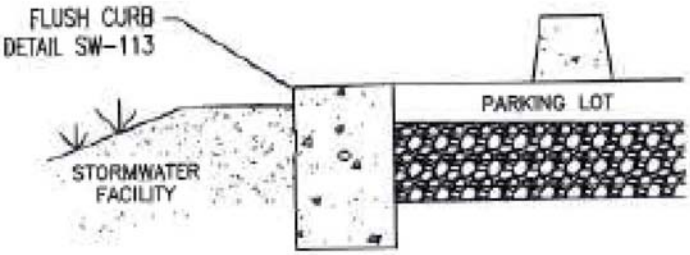

FLUSH EDGE/WHEEL STOPS

DESIGN NOTES

1. WHEEL STOPS MAY BE USED ON NON-FLUSH DESIGNS TO KEEP CARS FROM OVERHANGING BIORETENTION FACILITY.
2. VEHICLE OVERHANG CAN BE USED TO REDUCE IMPERVIOUS PAVEMENT AREA.
3. WHERE VEHICLE OVERHANG IS UTILIZED SELECT LOW GROWING PLANTS THAT WILL TOLERATE SHADING.

NOT TO SCALE

PARKING LOT EDGE OPTIONS	REVISIONS: JAN. 2016	CITY OF REEDLEY
	DRAWN BY: kjp	LID-10

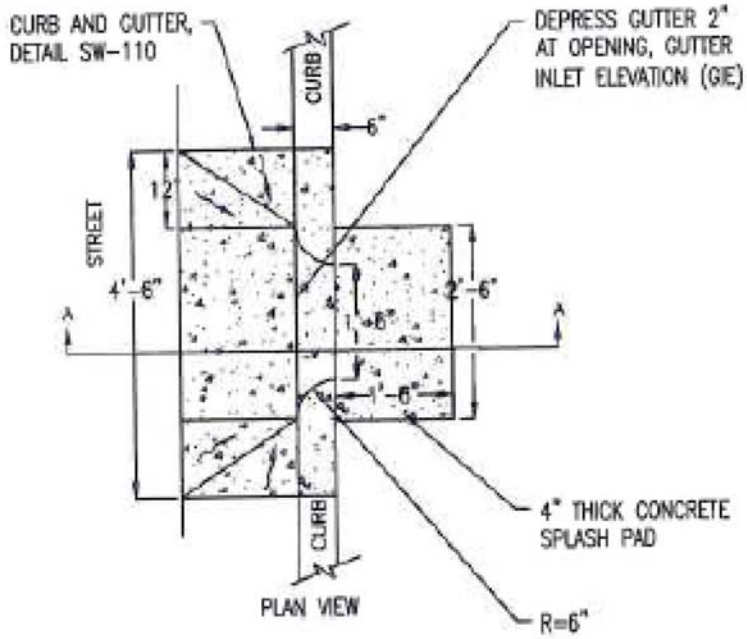

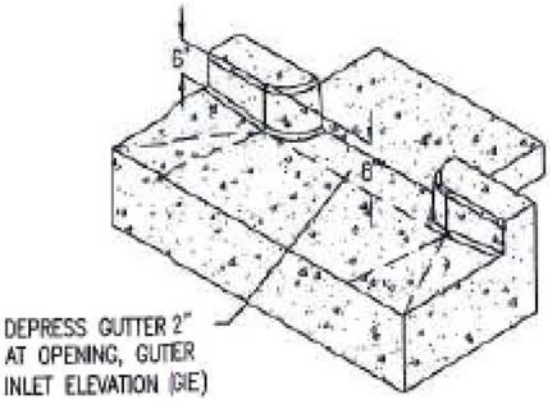

PERSPECTIVE VIEW

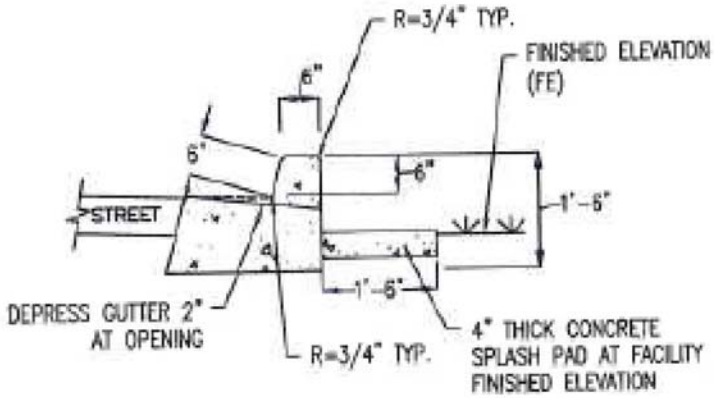

SECTION A-A

BIORETENTION DESIGN NOTES

1. FOR USE WITH STORMWATER FACILITIES WITH FLAT BOTTOMS.
2. PROVIDE SPOT ELEVATIONS ON PLANS (FE, OE, GIE, IE). SEE DETAIL SW-100.
3. CURB AND WALL DETAILS MAY BE MODIFIED BY CIVIL AND GEOTECHNICAL ENGINEERS SUBJECT TO APPROVAL BY CITY ENGINEER.
4. CURB HEIGHT MAY BE REDUCED TO 4-INCHES WHERE ADJACENT TO A SIDEWALK. SEE DETAILS SW-110 & SW-111.

CONSTRUCTION NOTES

1. AFTER CONSTRUCTION PLACE SAND BAGS AT GUTTER OPENINGS TO KEEP STORM FLOWS FROM ENTERING FACILITY UNTIL VEGETATION IS ESTABLISHED.

NOT TO SCALE

CURB CUT INLET FOR PLANTERS	REVISIONS: JAN. 2016	CITY OF REEDLEY
	DRAWN BY: kjp	LID-11

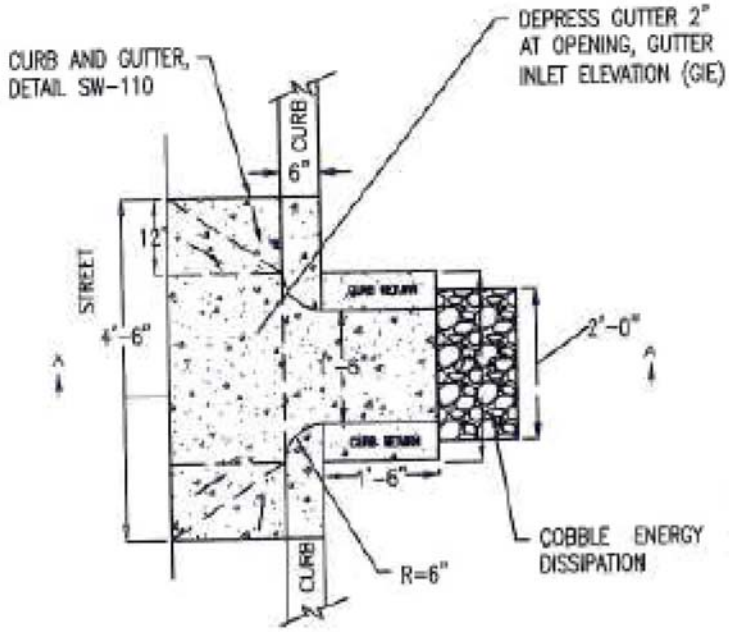

PLAN VIEW

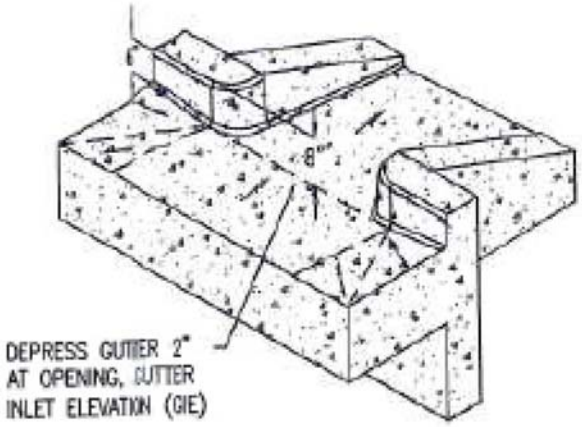

PERSPECTIVE VIEW

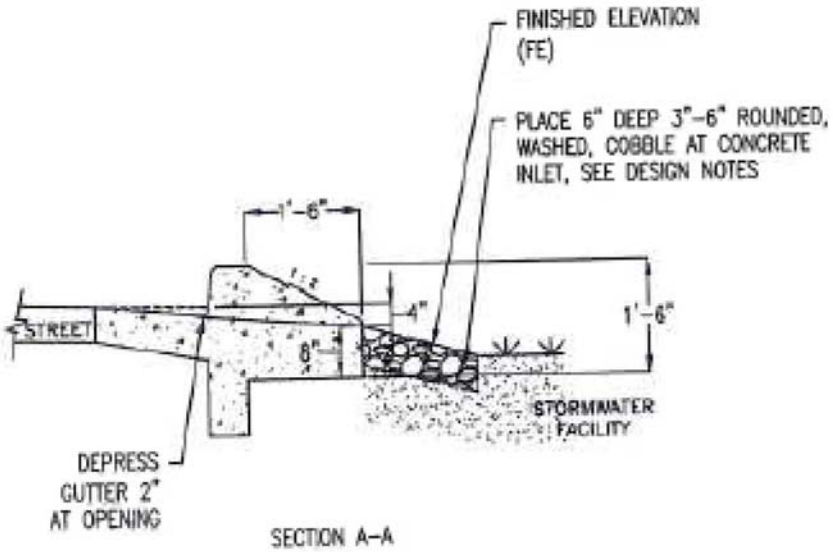

SECTION A-A

BIORETENTION DESIGN NOTES

1. FOR USE WITH STORMWATER FACILITIES WITH SIDE SLOPES.
2. PROVIDE SPOT ELEVATIONS ON PLANS (FE, OE, GIE, IE). SEE DETAIL SW-100.
3. CURB AND WALL DETAILS MAY BE MODIFIED BY CIVIL AND GEOTECHNICAL ENGINEERS SUBJECT TO APPROVAL BY CITY ENGINEER.
4. WHERE INLET FLOW VELOCITY IS HIGH, EXTEND COBBLE INTO FACILITY, BUT AVOID EXCESSIVE USE.
5. CURB HEIGHT MAY BE REDUCED TO 4-INCHES WHERE ADJACENT TO A SIDEWALK. SEE DETAILS SW-110 & SW-111.

CONSTRUCTION NOTES

1. AFTER CONSTRUCTION PLACE SAND BAGS AT GUTTER OPENINGS TO KEEP STORM FLOWS FROM ENTERING FACILITY UNTIL VEGETATION IS ESTABLISHED.

NOT TO SCALE

CURB CUT INLET FOR SIDE SLOPES RAIN GARDEN OR SWALE	REVISIONS: JAN. 2016 DRAWN BY: kjp	CITY OF REEDLEY LID-12

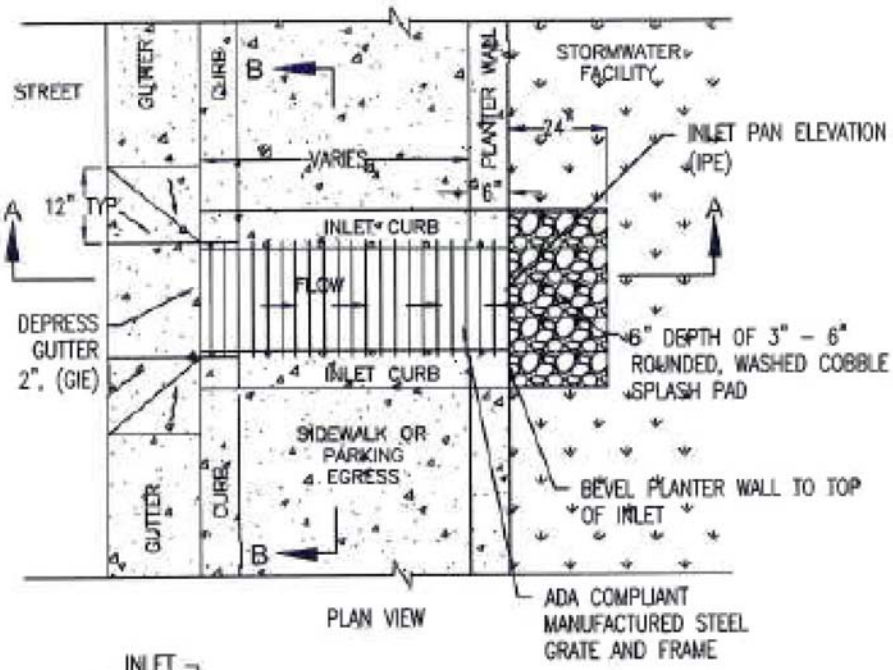

PLAN VIEW

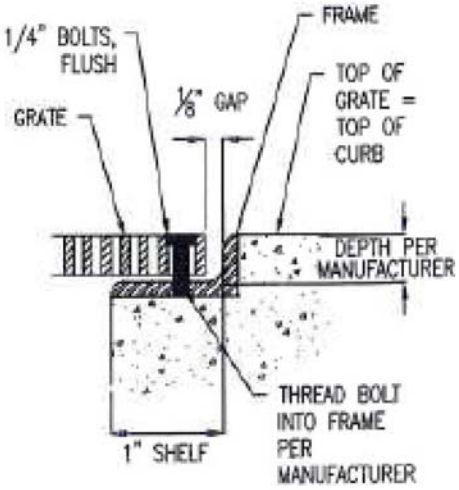

GRATE AND FRAME

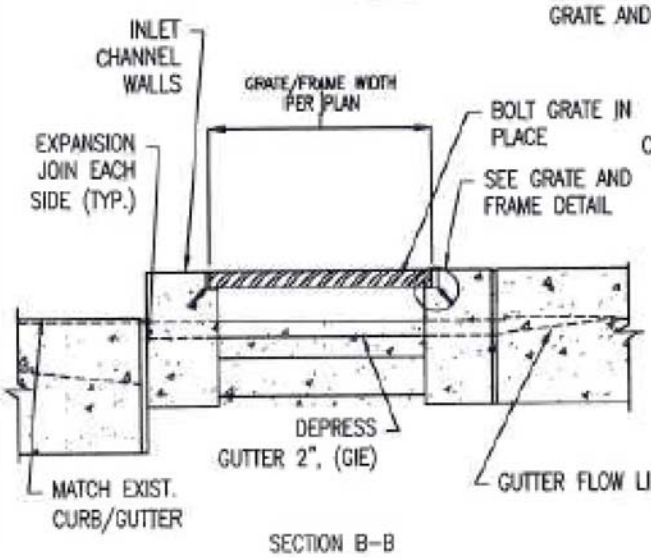

SECTION B-B

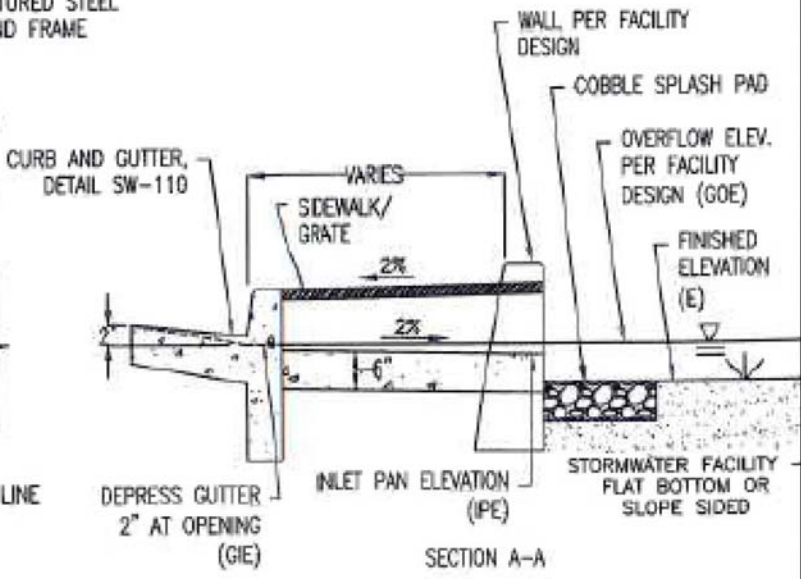

SECTION A-A

BIORETENTION DESIGN NOTES

1. FOR USE WITH STORMWATER FACILITIES WITH SLOPED SIDES OR FLAT BOTTOMS.
2. PROVIDE SPOT ELEVATIONS ON PLANS (FE, OE, GIE, IPE). SEE DETAIL SW-100.
3. REFER TO MUNICIPAL STANDARD DRAWINGS AND MATCH GUTTER PAN OF ADJACENT CURB AND GUTTER.
4. IF SLOPED SIDES, WHERE INLET FLOW VELOCITY IS HIGH, EXTEND COBBLE INTO FACILITY, BUT AVOID EXCESSIVE USE.
5. BASE MATERIAL FOR CURB, GUTTER, AND SIDEWALK PER MUNICIPAL STANDARDS.

CONSTRUCTION NOTES

1. AFTER CONSTRUCTION PLACE SAND BAGS AT GUTTER OPENINGS TO KEEP STORM FLOWS FROM ENTERING FACILITY UNTIL VEGETATION IS ESTABLISHED.

NOT TO SCALE

INLET WITH GRATE	REVISIONS: JAN. 2016	CITY OF REEDLEY
	DRAWN BY: kjp	LID-13

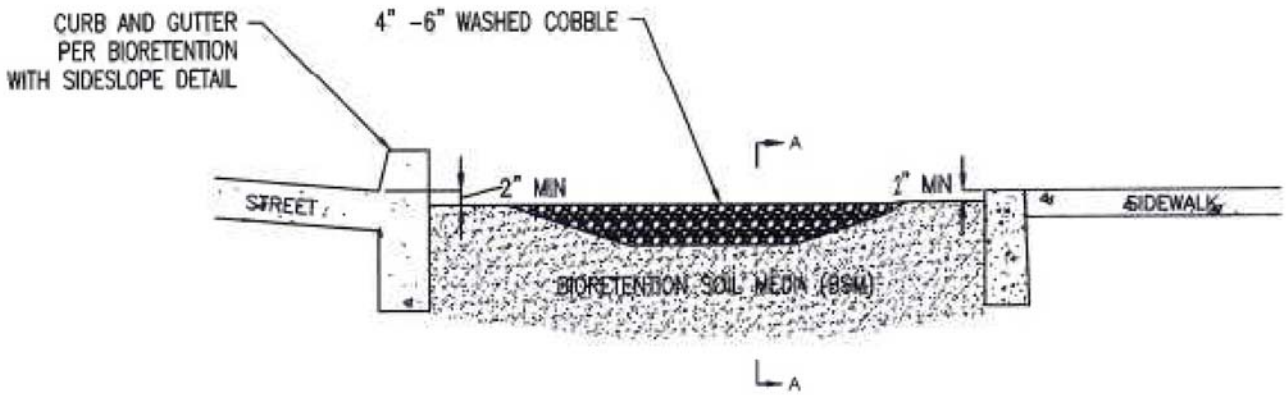

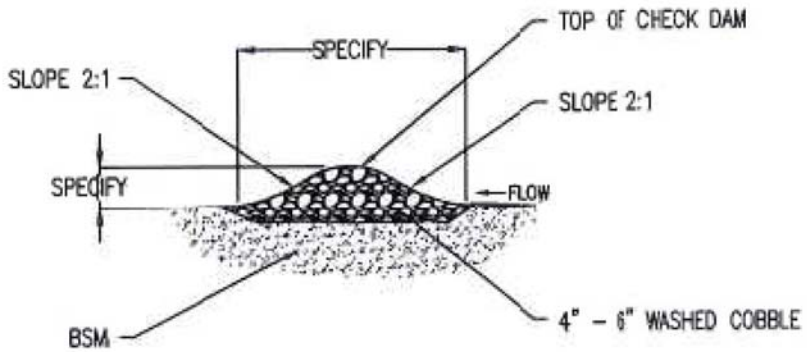

SECTION A-A

BIORETENTION DESIGN NOTES

1. FOR USE WITH STORMWATER FACILITIES WITH SLOPED SIDES.
2. BEST SUITED FOR FACILITIES WITH < OF <= THAN 2% LONGITUDINAL SLOPE.
3. PROVIDE ELEVATIONS AND STATIONING AND/OR DIMENSIONING FOR CHECK DAMS.
4. SPACE CHECK DAMS TO MAXIMIZE PONDING ACROSS ENTIRE CELL.
5. ENSURE THAT CHECK DAM ELEVATIONS DO NOT CAUSE STORMWATER TO OVERFLOW TO SIDEWALK.

CONSTRUCTION NOTES

1. DO NOT WORK DURING RAIN OR UNDER WET CONDITIONS.
2. KEEP ALL HEAVY MACHINERY OUTSIDE BIORETENTION AREA LIMITS.

NOT TO SCALE

GRAVEL CHECK DAM	REVISIONS: JAN. 2016	CITY OF REEDLEY
	DRAWN BY: kjp	LID-14

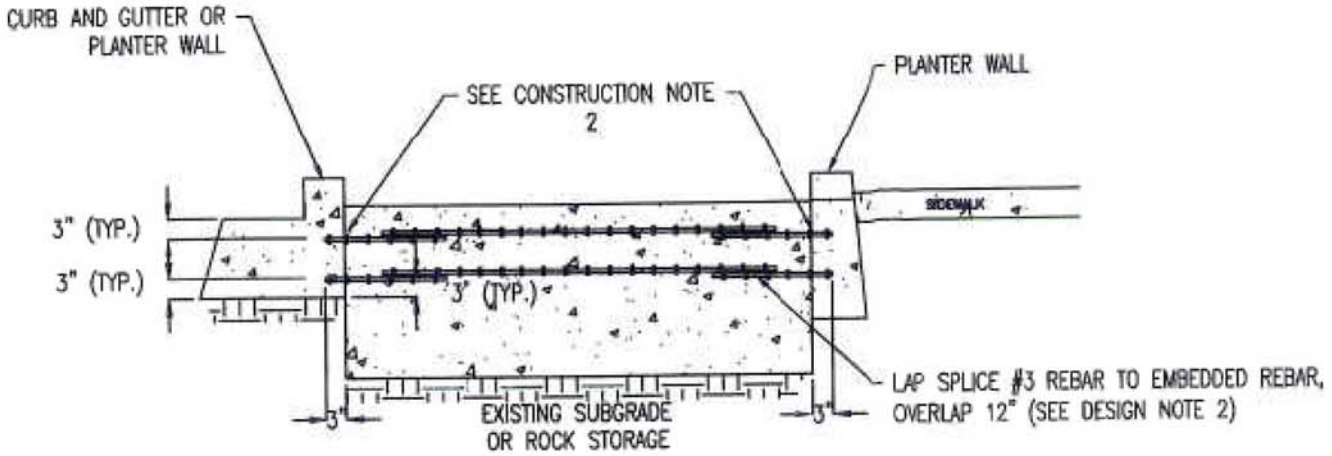

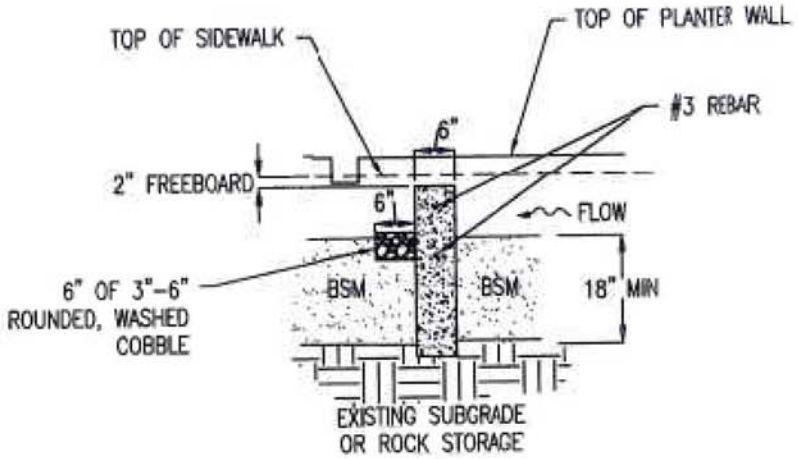

BIORETENTION DESIGN NOTES

1. FOR USE WITH BIORETENTION PLANTERS OR SLOPED SIDED SWALES/RAIN GARDENS.
2. FOR CHECK DAMS LONGER THAN 12' SPECIFY REBAR OVERLAP LENGTH.
3. SPACE CHECK DAMS TO MAXIMIZE PONDING ACROSS CELLS.
4. PROVIDE ELEVATIONS AND STATIONING AND/OR DIMENSIONING FOR CHECK DAMS.
5. ENSURE THAT CHECK DAM ELEVATIONS DO NOT CAUSE STORMWATER TO OVERFLOW TO SIDEWALK.
6. SHOW PLANTER WALL EMBEDDED IN EXISTING SUBGRADE OR DRAINROCK.

CONSTRUCTION NOTES

1. EMBED #3 REBAR 3" INTO CURB AND PLANTER WALL.
2. DO NOT WORK DURING RAIN OR UNDER WET CONDITIONS.
3. KEEP ALL HEAVY MACHINERY OUTSIDE BIORETENTION AREA LIMITS.

NOT TO SCALE

CONCRETE CHECK DAM	REVISIONS: JAN. 2016 DRAWN BY: kjp	CITY OF REEDLEY LID-15

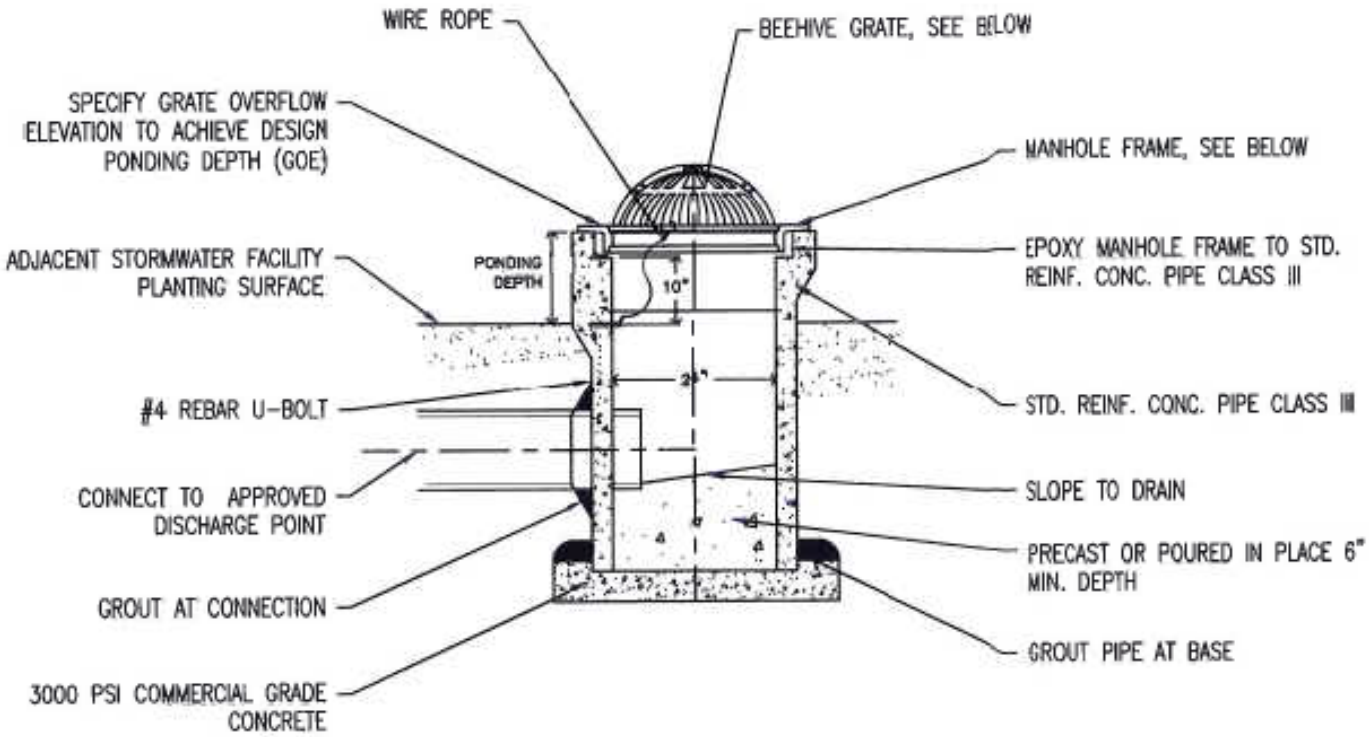

DESIGN NOTES

1. PROVIDE GRATE OVERFLOW ELEVATION ON PLANS.
2. TO INCORPORATE FLEXIBILITY INTO DESIGN OVERFLOW ELEVATION OR CORRECT ELEVATION OF AN EXISTING STRUCTURE, INSTALL OVERFLOW COLLAR, PER DETAIL SW-141.
3. IN PRIVATE SITES NOT IN CITY R/W THE PROJECT CIVIL ENGINEER MAY PROPOSE ALTERNATIVES FOR GRATE INSTALLATIONS USING ALTERNATIVE MANUFACTURER'S PRODUCT/CONFIGURATION.

CONSTRUCTION NOTES

1. DO NOT ADJUST OVERFLOW GRATE ELEVATION, CONSTRUCT AS SHOWN ON PLANS.

NOT TO SCALE

OVERFLOW STRUCTURE WITH BEEHIVE GRATE	REVISIONS: JAN. 2016	CITY OF REEDLEY
	DRAWN BY: kjp	LID-16

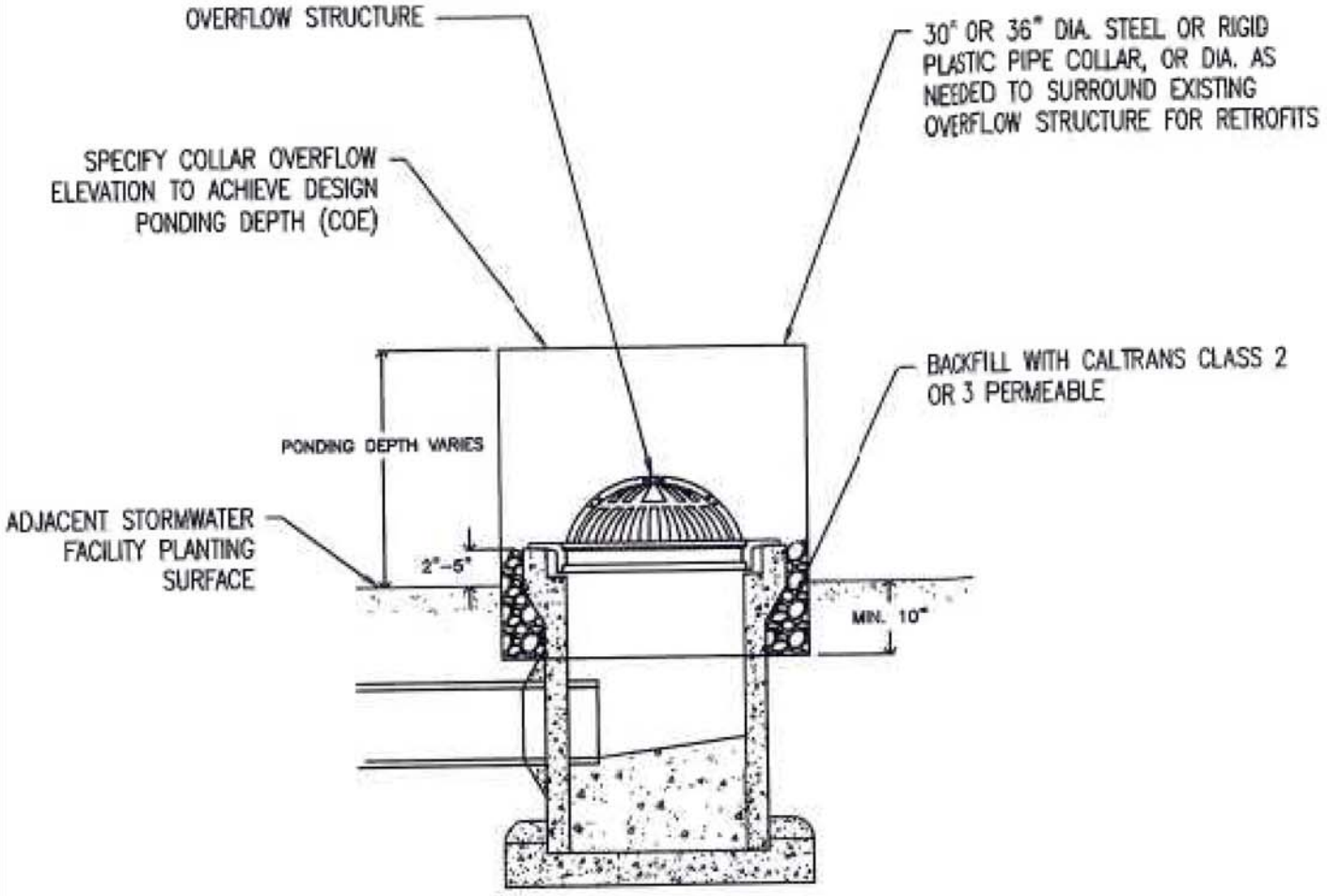

DESIGN NOTES

1. MAY BE USED IN CONJUNCTION WITH OVERFLOW STRUCTURES TO ALLOW FOR FIELD ADJUSTMENT OF OVERFLOW ELEVATION, OR AS RETROFIT TO CORRECT EXISTING STRUCTURE THAT DOES NOT ALLOW PONDING TO OCCUR.
2. PROVIDE COLLAR OVERFLOW ELEVATION (COE) ON PLANS.
3. PCC PIPE RISER EXTENSIONS MAY BE UTILIZED IN LIEU OF OVER FLOW STRUCTURE COLLAR.

CONSTRUCTION NOTES

1. CENTER COLLAR ON OVERFLOW GRATE.

NOT TO SCALE

OVERFLOW STRUCTURE COLLAR	REVISIONS: JAN. 2016 DRAWN BY: kjp	CITY OF REEDLEY LID–17

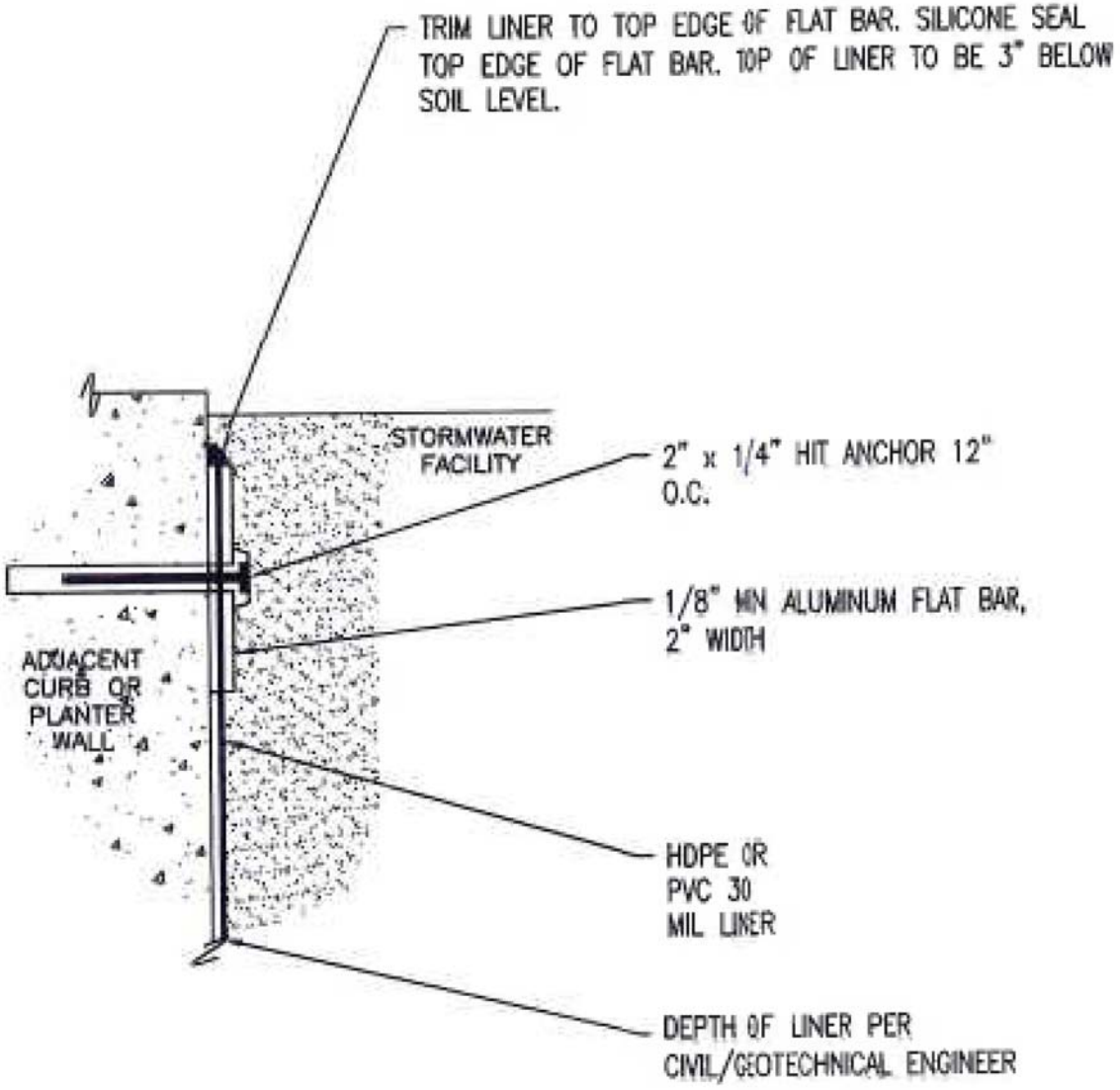

NOT TO SCALE

IMPERMEABLE LAYER	REVISIONS: JAN. 2016 DRAWN BY: kjp	CITY OF REEDLEY LID–18

NOT TO SCALE

Bioretention Plant List

Plants for Zone A: Periodic inundation, area ponds following storm events (6" to 12" depth for 24 - 72 hours) and compost amended sand soil.

Scientific & Common Name	Height / Width	Light Preferences			Water Tolerances		CA Native	Sunset Climate Zones[1]	Notes
		Sun	Part	Shade	Drought	Inundation			
GRASS / GRASSLIKE									
Carex barbarae Santa Barbara Sedge/ Basket Sedge	1-2' / 1'-2'	X	X	X		X	X	4 - 9, 14 - 23	Attracts butterflies, deer resistant, good for erosion control, can spread agressively and should be sited carefully.
Carex divulsa Berkeley Sedge	1' / spreading	X	X	X	X	X		all, but 1A-3A	Attractive blue-grey leaves. Can be mowed 4 in high to keep clean look.
Carex flacca Blue Sedge	1' / spreading	X	X		X	X		3A - 9, 14 - 23	Attractive blue-grey leaves. Can be mowed 4 in high to keep clean look.
Carex praegracilis California Field Sedge	1' / spreading	X	X			X	X	all, but 1A -3A	Mounding, drought deciduous during summer months.
Carex spissa San Diego sedge	3 - 4' / 2 - 3'	X	X		X	X	X	all, but 1A-3A	Can handle foot traffic and is deer resistant.
Chondropetalum tectorum Small Cape Rush	2 - 3' / 3 - 4'	X	X	X	X	X		all, but 1A-3A and 7	Needs very little maintenance. If trimmed too much plant will loose visual integrity.
Leymus condensatus 'Canyon Prince' Canyon Prince Wild Rye	3'/3'	X	X			X	X	all, but 1A-3A	Tolerant of drought, poor soils, part shade and seasonal wet. Spreads by rhizomes, so nice planted in masses. Cut back annually in spring before new growth emerges.
Juncus effusus Common Rush	2 - 3' / clumping	X	X			X	X	all	Easy to grow & very reliable. Needs more water than *Juncus patens*.
Juncus patens 'Elk Blue' Elk Blue California Gray Rush	2' / clumping	X	X		X	X	X	all	Very little maintenance, handles dry summers and wet winters.
Muhlenbergia rigens Deer Grass	2 - 3' / 3 - 6'	X	X		X	X	X	all, but 1A-3A	Can handle no watering, will stay green year round with watering, trim annually.
Scirpus cernus Low Bulrush	1' / spreading	X	X			X		7 - 24	Grow individually or in mass, cut back once a year, very attractive.

1 Refers to the Sunset Western Garden Book Zones www.sunset.com/garden/climatezones/

Prepared by the Central Coast Low Impact Development Initiative www.centralcoastlidi.org

ZONE A LID
RECOMMENDED PLANT LIST
GRASS/GRASSLIKE

REVISIONS:
JAN. 2016

DRAWN BY: kjp

CITY OF REEDLEY

LID-19

NOT TO SCALE

Bioretention Plant List

Plants for Zone A: Periodic inundation, area ponds following storm events (6" to 12" depth for 24 - 72 hours) and compost amended sand soil.

Scientific & Common Name	Height / Width	Light Preferences			Water Tolerances		CA Native	Sunset Climate Zones[1]	Notes
		Sun	Part	Shade	Drought	Inundation			
PERENNIALS									
Achillea millefolium californica Yarrow	1 - 3' / 2'	X	X		X	X	X	all	Tolerates regular to no watering, foot traffic attracts butterflies, stress deciduous.
Anemopsis californica Yerba Mansa	1 - 2' / spreading	X	X			X	X	all, but 1A-3A	Mat forming ground cover, interesting white flowers, prune back in late summer, likes moist conditions.
Bidens laevis Joaquin Sunflower	2 - 3' / 1 - 2'	X				X	X	all but 1A	Attracts beneficial insects, stress deciduous in summer, likes water but will survive drought if pruned back.
Calliandra eriophylla Fairy Duster	1 - 3' / 1 - 3'	X			X	X	X	10 - 24	Very attractive 1 - 2 inch pink flowers, little water after established, semi-evergreen, attracts butterflies and hummingbirds.
Epipactis gigantea Stream Orchid	1 - 2' / 2 - 3'	X	X			X	X	all	Will go dormant during drought, interesting muted pink and yellow flowers.
Eschscholzia californica California Poppy	1 - 3' / 1 - 3"	X			X	X	X	all	Can handle periodic inundation, cut back yearly to prevent it from becoming weedy.
Iris douglasiana Douglas Iris	1 - 2' / spreading	X	X			X	X	all, but 1A-3A	Needs moisture or shade inland, does well on coast, evergreen leaves, attractive lanvendar-blue flowers in Spring
Lilium pardalinum Leopard Lily	3 - 8' / 6"	X	X			X	X	2-7, 14-17	Attractive red-orange spotted blossoms in spring, needs regular water, will get large in moist, partial shade conditions.
Lobelia cardinalis Cardinal Flower	2 - 3' / 2'	X	X	X		X	X	1-7, 14-17	A bog plant, attracts hummingbirds, showy scarlet flowers.
Mimulus cardinalis Scarlet Monkey Flower	1 - 3' / 1 - 3'	X	X	X		X	X	all but 1A	Year round red color with regular water, attracts hummingbirds, reseeds itself & should not be used for small spaces.
Mimulus guttatus Soap Monkey Flower	1 - 3' / 1 - 3'	X	X			X	X	all but 1A	Yellow flowers are abundant in spring-summer, attracts butterflies, will die back in drought and come back following year.
Rudbeckia californica California Coneflower	2 - 5' / 1 - 2'		X		X	X	X	all	Yellow showy flowers late summer and fall, cut back in winter, can get large under ideal conditions and may require pruning.
Salvia spathacea Hummingbird Sage	1 - 3' / spreading		X	X	X	X	X	all, but 1A-3A	Very attractive foliage and flowers, fragrant, attracts hummingbirds, deer resistant, likes to grow in understory of trees.
Sisyrinchium bellum Blue-Eyed Grass	6" - 1' / 6" - 1	X			X	X	X	all, but 1A-3A	Requires little to no maintenance. Summer dormant, will come back during wetter months on it's own. Can irrigate to prolong flowering.
Solidago californica California Goldenrod	1 - 3' / 2 - 3"	X	X	X	X	X	X	all, but 24	Attracts beneficial insects and butterflies. Attractive yellow flowering inflorescents in summer and fall. Dormant in winter, cut back to ground.

1 Refers to the Sunset Western Garden Book Zones www.sunset.com/garden/climatezones/

Prepared by the Central Coast Low Impact Development Initiative www.centralcoastlidi.org

ZONE A LID
RECOMMENDED PLANT LIST
PERENNIALS

REVISIONS:
JAN. 2016

DRAWN BY: kjp

CITY OF REEDLEY

LID-20

NOT TO SCALE

Bioretention Plant List

Plants for Zone A: Periodic inundation, area ponds following storm events (6" to 12" depth for 24 - 72 hours) and compost amended sand soil.

Scientific & Common Name	Height / Width	Light Preferences			Water Tolerances		CA Native	Sunset Climate Zones[1]	Notes
		Sun	Part	Shade	Drought	Inundation			
SHRUBS/SUBSHRUBS									
Baccharis pilularis Coyote Brush	wide variation	X			X	X	X	all, but 1A-3A	Adaptable evergreen shrub, provides quick cover and bank stabilization, tolerant of coastal conditions, alkaline soil, sand, clay and seasonal wet, dwarf (low growing) varieties available.
Zauschneria californica 'Catalina' Island California Fuchsia	1 - 3' / 2 - 3'	X	X		X	X	X	All but 1A	Likes moisture but will survive through drought, attractive red flowers that hummingbirds like. This species is hardier and flowers last longer.
Zauschneria californica 'Uvas Canyon' San Jose California Fuchsia	2 - 3' / spreading	X	X		X	X	X	All but 1A	Grey foliage, attractive red- orange flowers, very showy in late fall. Full sun with regular watering or along coast. Can be mowed to look like lawn.
LARGE SHRUBS / TREES									
Aesculus californica California Buckeye	15'	X	X		X	X	X	all but 1A-2A	Small tree that has fragrant white panicles April - May.. Needs regular water for the first 2 years. Interesting form throughout all seasons. Good for native bee population.
Amorpha californica California False Indigo Bush	6' / spreading		X	X	X	X	X	all, but 1A -3A	Large shrub, with fragrant purple flowers. Needs no water after established. Provides larval food for California State butterfly.
Cercis occidentalis Western Redbud	3 - 16' / 3 - 16'	X	X		X	X	X	all but 1A	Needs winter chill to set flowers properly. Abundant amount of flowering purple-pink flowers in spring. Can be pruned to tree or left as shrub.
Cornus californica California Dogwood	3 - 10' / 3 - 10'		X		X	X	X	all, but 1A -3A	Attractive red branching stems with red deciduous leaves in winter. Good for erosion control. Showy white blooms in spring.
Garrya elliptica 'James Roof' Silk Tassel	10 - 15'	X	X		X	X	X	all, but 1A -3A	Drought tolerant where rainfall exceeds 20." Evergreen shrub - tree with hanging white catkins.
Sambucus mexicana Tapiro, Blue Elderberry	6 - 15'	X	X		X	X	X	all but 1A	Deciduous shrub that can be pruned to a tree. Can handle extreme drought after first years. Needs maintenance to upkeep appearance. Attractive yellow flowers and edible blue berries. Great for ecosystem rehabilitation.
Spiraea douglasii Western Spiraea	4 - 5'	X	X		X	X	X	all	Deciduous shrub, fast growing. Attractive pink clustered flowers summer to early fall. Drought tolerant once established. Very adaptable.

1 Refers to the Sunset Western Garden Book Zones www.sunset.com/garden/climatezones/

Prepared by the Central Coast Low Impact Development Initiative www.centralcoastlidi.org

ZONE A LID
RECOMMENDED PLANT LIST
SHRUBS/TREES

REVISIONS:
JAN. 2016

DRAWN BY: kjp

CITY OF REEDLEY

LID-21

Varying slope and ponding levels: Varying slope and ponding levels: This bioretention planting area has sloped edges. Plants in the bottom area will be inundated during storms (**Zone A**). Those planted on the sideslopes are above the level of ponding, but will experience seasonally wet conditions (**Zone B**).

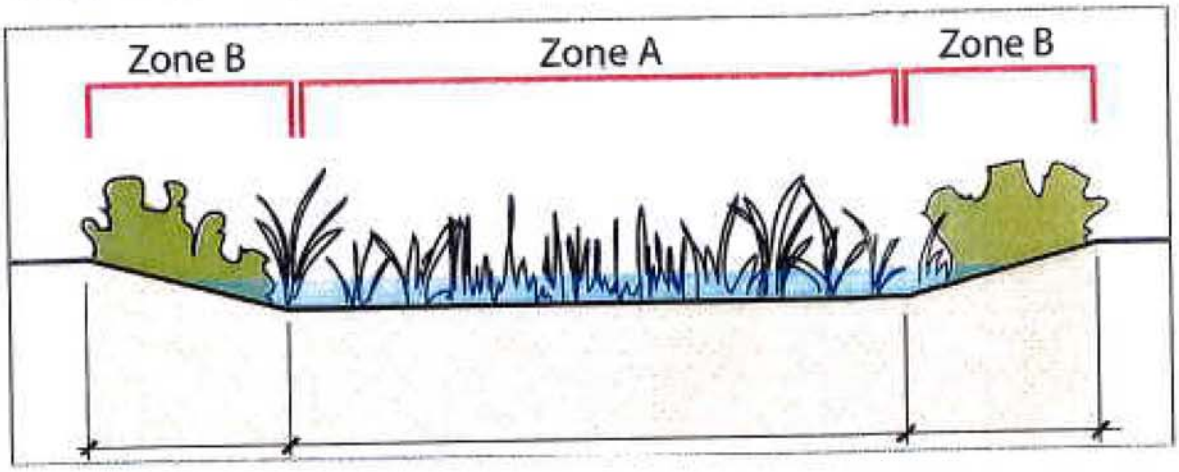

Uniform surface grade: This stormwater planter has a flat bottom with consistent depth of ponding across the structure. All of the plants selected for this design must be tolerant of periodic inundation (**Zone A**).

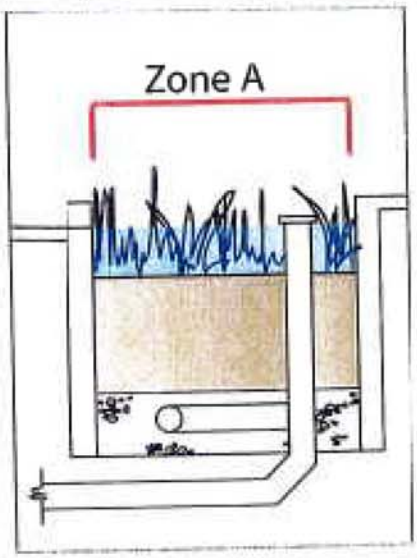

NOT TO SCALE

PLANTING INUNDATION ZONES	REVISIONS: JAN. 2016	CITY OF REEDLEY
	DRAWN BY: kjp	LID–22